GO LABEL

The Smart Way to Manage Your Restaurant Operations

GoLabel is a wireless label printer designed to work with a tablet running GoOps or SubOps. GoLabel simplifies your food prepping and labeling procedures. This Quick Start Guide will help you familiarize yourself with GoLabel before you get started.

ZippyYum

www.zippyyum.com
support@zippyyum.com
(888) 636-7557

SETUP

1 Plug in and turn on your GoLabel printer

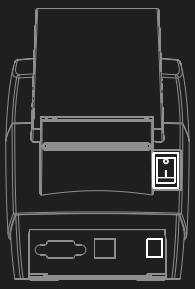

2 Insert the spindle into the roll of labels, then insert the roll into the printer aligning the spindle into the slots

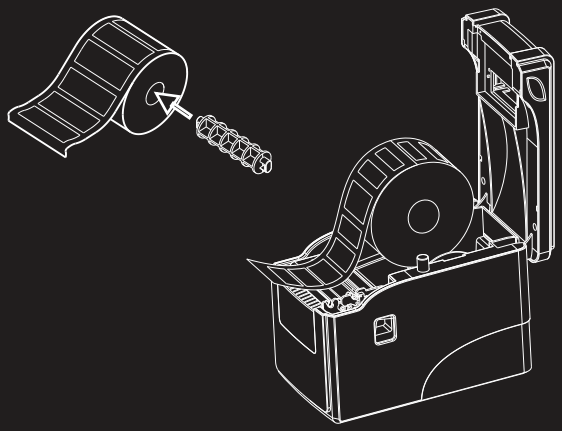

3 Download and install the GoOps or SubOps app on a compatible tablet

GOOPS

SUBOPS

4 Enter your credentials and log into the app

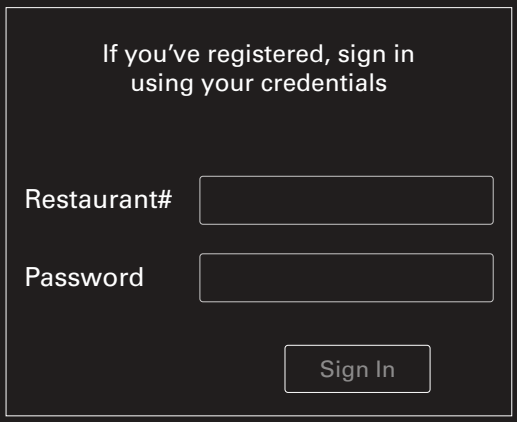

5 From the main menu, go to "Settings," then select "Printer" and "Connection Settings" Make sure your printer is turned on. Tap on the printer to connect to it.

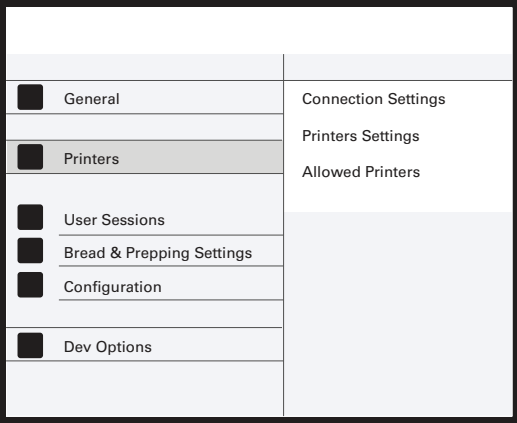

GETTING TO KNOW YOUR GOLABEL HARDWARE

1 Cover Release Button

2 Connection Indicator

3 Error Indicator

4 Pause Button

5 Feed Button

6 Power Button

7 Paper Loading Axis

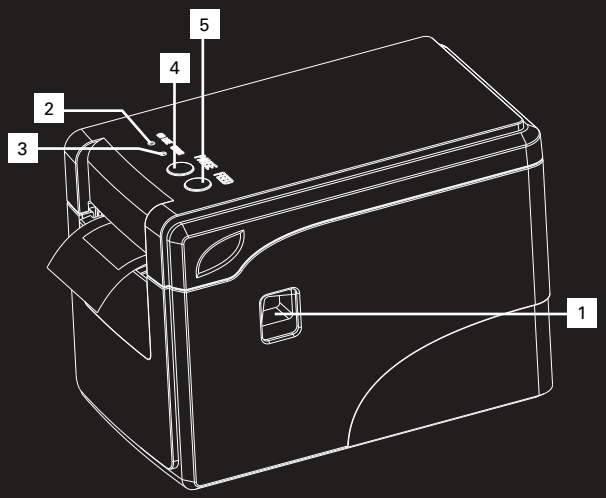

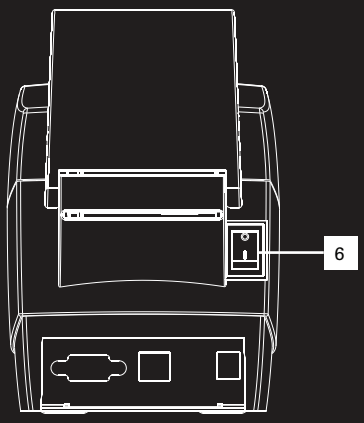

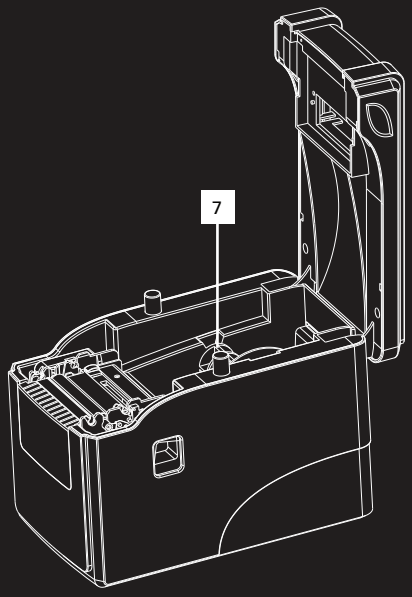

Warning:

This device complies with Part 15 of the FCC Rules. Operation is subject to the following two conditions: (1) this device may not cause harmful interference, and (2) this device must accept any interference received, including interference that may cause undesired operation.

changes or modifications not expressly approved by the party responsible for compliance could void the user's authority to operate the equipment.
NOTE: This equipment has been tested and found to comply with the limits for a Class B digital device, pursuant to Part 15 of the FCC Rules. These limits are designed to provide reasonable protection against harmful interference in a residential installation. This equipment generates, uses and can radiate radio frequency energy and, if not installed and used in accordance with the instructions, may cause harmful interference to radio communications. However, there is no guarantee that interference will not occur in a particular installation.
If this equipment does cause harmful interference to radio or television reception, which can be determined by turning the equipment off and on, the user is encouraged to try to correct the interference by one or more of the following measures:
-- Reorient or relocate the receiving antenna.
-- Increase the separation between the equipment and receiver.
-- Connect the equipment into an outlet on a circuit different from that to which the receiver is connected.
-- Consult the dealer or an experienced radio/TV technician for help.
NOTE: This device and its antenna(s) must not be co-located or operation in conjunction with any other antenna or transmitter

RF Exposure Statement

To maintain compliance with FCC's RF Exposure guidelines, This equipment should be installed and operated with minimum distance of 20cm the radiator your body. This device and its antenna(s) must not be co-located or operation in conjunction with any other antenna or transmitter

PRINTING LABELS

The number on the printer shows how many labels will be printed. After printing a label(s), the number will turn grey and reset to 1.

Done | Prepping & Printing Labels | Iii - 0053 | Count

PRODUCTS	Quantity		Containers		HOW-TO	PRINT LABEL
Protein						
Cheese Pepper Jck Slcd	2	Pack (1 lb)	1	1/6 container		1
Cheese Swiss Nat Sl 32	2	Pack (1 lb)	1	1/6 container		1
Chs American White Trngl 400S	1	Pack (5 lbs)	2	1/6 container		2
Chs Jck/Ched Shred	1	Bag (2 lbs)	2	1/6 container		2
Chs Provolone Slc	2	Pack (1 lb)	1	1/6 container		2
Egg Patty Ylw 1 5 oz Fz	6	Pack (1 ct)	1	1/3 container		1
Egg Whi Patty 1 5 oz Fz	6	Pack (1 ct)	1	1/3 container		1
Toppings						
Glaze Teryaki		N/A		N/A		1
Mayo Light	1	Pouch (52 oz)	8	Bottles		

Changing the number in the containers or quantity box will make the icon green again, indicating the new number of labels to print.

This icon indicates the item does not need a printed label. Just tap to mark it as completed.