EXCERA

EP5000

Digital Portable Radio
User Manual

This manual helps you quickly get basic operations of our digital portable radio.
Before using this product, please read this manual carefully.

Alert Icon

Caution:
Indicates situations that could cause human injury or damage to your products.

Note:
Indicates tips that can help you make better use of your products.

Package Contents

Please unpack carefully and check if all items listed below are received. If any item is missing or damaged, please contact your dealer.

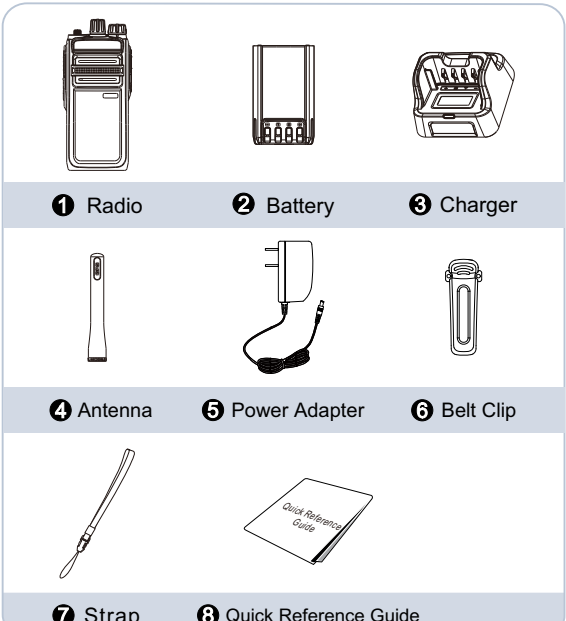

Getting Started

■ Radio Controls

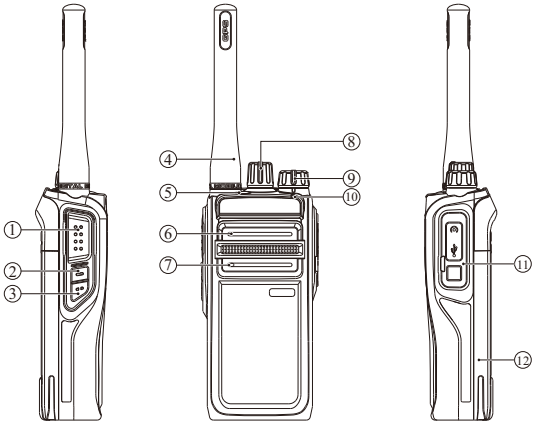

No.	Part Name	No.	Part Name
①	PTT Key	⑧	Channel/ Group Selector Knob
②	Side Key 1 (SK1)		
③	Side Key 2 (SK2)	⑨	Radio On-Off/ Volume Control Knob
④	Antenna		
⑤	Top Key (TK)	⑩	LED Indicator
⑥	Speaker	⑪	Accessory Jack
⑦	Microphone	⑫	Battery

Radio Status Indication

■ LED Indicator

LED Indicator	Radio Status
LED flashes green slowly.	None
LED flashes green rapidly.	Upgrading or powering on
LED glows green.	Receiving
LED flashes red slowly.	Low battery
LED flashes red rapidly.	None
LED glows red.	Transmitting
LED flashes orange slowly.	Scanning
LED flashes orange rapidly.	None

Basic Operations

■ Turning the Radio On/Off

Rotate the **Radio On-Off/Volume Control** knob clockwise or counterclockwise until a click is heard to turn the radio on/off.

■ Adjusting the Volume

After turning the radio on, rotate the **Radio On-Off/Volume Control** knob clockwise to increase the call volume, or counterclockwise to decrease it.

■ Adjusting Power Level

With this option, you may adjust power levels quickly. We recommend you to adopt low power for battery saving. However, if you cannot communicate with radios located at a distant place with low power, please select high power.
You may press the programmed **Adjust Power Level** key to adjust power levels.

■ Selecting a Zone

A zone is a group of channels exhibiting the same property. The radio supports 32 zones and each zone contains 128 channels at most.
You can select a zone by pressing the programmed **Zone Up** or **Zone Down** key, and you will hear the correspond warning tone when switching to the zone.

■ Selecting a Channel

After turning the radio on, rotate the Channel Selector knob to select a needed channel. You can also switch to the designated channel by pressing the Preset Channel key.
If the Channel Notify function is active, you will hear the corresponding channel number when switching to any channel.

■ Switching the Channel Mode

This radio can operate in either digital or analog conventional mode.
Each channel can be programmed as either analog or digital channel via the CPS. If the current zone includes a mixture of analog and digital channels, you may quickly switch between digital and analog through the **Channel Selector** knob.

■ Call

To ensure that your speech is clear, keep the microphone 2.5 to 5 cm from your mouth.

Private Call

A private call is a call form an individual radio to another individual radio.
You can make a private call to the preset contact by pressing the **PTT** key in standby status.

Note:
You may preset a contact for each digital channel. The contact may be a private call contact, or group call contact or all call contact.

Receive a Call or Call Back

When receiving a private call, you may answer the call without any operation, and press the **PTT** key in preset time to call back.

Group Call

A group call refers to a call from an individual radio to a group of radios in standby status.

Initiate a Call

You can make a group call to the preset contact by pressing the **PTT** key in standby status.

Receive a Call or Call Back

When receiving a group call, you may answer the call without any operation, and press the **PTT** key in preset time to call back.

■ Transmitting or Receiving a Call on Analog Channel

To transmit a call on an analog channel, press the **PTT** key and speak into the microphone.
To receive a call on an analog channel, release the **PTT** key.

■ Transmit Time-Out

The purpose of Transmit Time-Out is to prevent any user from occupying a channel for an extended period. If the preset time expires, the radio will automatically terminate the transmission and sound alert tones that will disappear when the **PTT** key is released.
You may set the time via the CPS.

SHENZHEN EXCERA TECHNOLOGY CO.,LTD.

Address: 3rd Floor, Block B,Jiada R&D Building, No.5 Songpingshan Road, Hi-Tech Park North, Nanshan District , Shenzhen

Postal Code: 518057

Web: www.excera.com.cn

Tel: +86-755-33010298

➢ Major Technical Specification

PMR	
Operation Frequency Range:	From 400MHz to 470MHz
Modulation Type:	Analog: FM Digital: 4FSK
Channel Separation:	Analog: 12.5kHz Digital: 12.5kHz
Rated Output Power:	High: 4.2W Low: 1.2W
Bluetooth	
Version:	Supported BT4.0 EDR+BLE
Modulation:	GFSK, π/4DQPSK, 8DPSK
Operation frequency:	2402MHz~2480MHz
Channel number:	79 Channel for EDR 40 Channel for BLE
Channel separation:	1MHz for EDR 2MHz for BLE

➢ FCC Statement

This device complies with Part 15 of the FCC Rules. Operation is subject to the following two conditions:

(1) This device may not cause harmful interference, and

(2) This device must accept any interference received, including interference that may cause undesired operation.

NOTE 1: This equipment has been tested and found to comply with the limits for a Class B digital device, pursuant to part 15 of the FCC Rules. These limits are designed to provide reasonable protection against harmful interference in a residential installation. This equipment generates, uses and can radiate radio frequency energy and, if not installed and used in accordance with the instructions, installed and used in accordance with the instructions, may cause harmful interference to radio communications. However, there is no guarantee that interference will not occur in a particular installation. If this equipment does cause harmful interference to radio or television reception, which can be determined by turning the equipment off and on, the user is encouraged to try to correct the interference by one or more of the following measures:

- Reorient or relocate the receiving antenna.
- Increase the separation between the equipment and receiver.
- Connect the equipment into an outlet on a circuit different from that to which the receiver is connected.
- Consult the dealer or an experienced radio/TV technician for help.

NOTE 2: Any changes or modifications to this unit not expressly approved by the party responsible for compliance could void the user's authority to operate the equipment.

Warning!

This portable radio generates RF electromagnetic energy during transmit mode. This radio is designed for and classified as “Occupational Use Only,” meaning it must be used only during the course of employment by individuals aware of the hazards and the ways to minimize such hazards. This radio is NOT intended for use by the “General Population” in an uncontrolled environment.

Output power listed is rated conducted. This device must be restricted to work-related operations only in an Occupational/Controlled RF exposure environment and must operate with a duty factor not exceeding 50%. This transmitter may operate with the antenna(s) documented in this filing in Push-to-Talk and body-worn configurations. RF exposure compliance is limited to the specific belt-clip and accessory configurations as documented in this filing and the separation distance between user and the device or its antenna shall be at least 2.5 cm. All qualified end-users of this device must have the knowledge to control their exposure conditions and/or duration to comply with occupational/controlled Exposure limit and requirements. The highest reported SAR values for Face-held and body-worn are 2.705 W/Kg and 2.856 W/Kg.