FCC 47 CFR PART 15 SUBPART C

CERTIFICATION TEST REPORT

For

Fingerprint Lock

MODEL No.: ML10B, ML10DB, ML10, ML10D, PL10B, PL10DB, PL10, PL10D

Trade Mark: N/A

FCC ID: 2AE6L-ML10B

REPORT NO: ES150603020E

ISSUE DATE: June 23, 2015

Prepared for

DongGuan ZKSoftware Electronic Technology Co., Ltd
No.26, Pingshan 188 Industry zone, Tangxia Town, Dongguan City, Guangdong Province, China 523728

Prepared by

SHENZHEN EMTEK CO., LTD.

Bldg 69, Majialong Industry Zone, Nanshan District, Shenzhen, Guangdong, China
TEL: 86-755-26954280
FAX: 86-755-26954282

Table of Contents

1 TEST RESULT CERTIFICATION 3

2 EUT TECHNICAL DESCRIPTION 4

3 SUMMARY OF TEST RESULT 5

4 TEST METHODOLOGY 6

4.1 GENERAL DESCRIPTION OF APPLIED STANDARDS 6
4.2 MEASUREMENT EQUIPMENT USED 6
4.3 DESCRIPTION OF TEST MODES 7

5 FACILITIES AND ACCREDITATIONS 8

5.1 FACILITIES 8
5.2 LABORATORY ACCREDITATIONS AND LISTINGS 8

6 TEST SYSTEM UNCERTAINTY 9

7 SETUP OF EQUIPMENT UNDER TEST 10

7.1 RADIO FREQUENCY TEST SETUP 1 10
7.2 RADIO FREQUENCY TEST SETUP 2 10
7.3 CONDUCTED EMISSION TEST SETUP 11
7.4 SUPPORT EQUIPMENT 12

8 TEST REQUIREMENTS 13

8.1 DTS 6DB BANDWIDTH 13
8.2 MAXIMUM PEAK CONDUCTED OUTPUT POWER 16
8.3 MAXIMUM POWER SPECTRAL DENSITY 17
8.4 UNWANTED EMISSIONS IN NON-RESTRICTED FREQUENCY BANDS 20
8.5 RADIATED SPURIOUS EMISSION 25
8.6 ANTENNA APPLICATION 37

1 TEST RESULT CERTIFICATION

Applicant:	DongGuan ZKSoftware Electronic Technology Co., Ltd No.26, Pingshan 188 Industry zone, Tangxia Town, Dongguan City, Guangdong Province, China 523728
Manufacturer:	DongGuan ZKSoftware Electronic Technology Co., Ltd No.26, Pingshan 188 Industry zone, Tangxia Town, Dongguan City, Guangdong Province, China 523728
Product Description:	Fingerprint Lock
Model Number:	ML10B, ML10DB, ML10, ML10D, PL10B, PL10DB, PL10, PL10D (Note: These models are identical in circuitry and electrical, mechanical and physical construction; the only differences are the model no. for trading purpose. We prepare ML10B for test, and the worst result recorded in the report.)
File Number:	ES150603020E
Date of Test:	June 03, 2015 to June 23, 2015

Measurement Procedure Used:

APPLICABLE STANDARDS	
STANDARD	**TEST RESULT**
FCC 47 CFR Part 2, Subpart J FCC 47 CFR Part 15, Subpart C	**PASS**

The above equipment was tested by SHENZHEN EMTEK CO., LTD. The test data, data evaluation, test procedures, and equipment configurations shown in this report were made in accordance with the procedures given in ANSI C63.10 (2013) and the energy emitted by the sample EUT tested as described in this report is in compliance with the requirements of FCC Rules Part 2 and Part 15.247

The test results of this report relate only to the tested sample identified in this report

Date of Test : June 03, 2015 to June 23, 2015

Test by : KingKong /Tester

Prepared by : Yaping Shen/Editor

Approve & Authorized Signer : Lisa Wang/Manager

2 EUT TECHNICAL DESCRIPTION

Characteristics	Description
Data Rate	1Mbps for GFSK modulation
Modulation:	GFSK modulation
Operating Frequency Range(s):	2402-2480MHz
Number of Channels:	40 channels
Transmit Power Max:	1.601 dBm for BT DTS;
Antenna Type :	PCB Antenna
Antenna Gain:	2.2 dBi;
Power supply:	☒DC supply: DC 6V by 4*AA battery
	☐Adapter supply:
Temperature Range	-20°C ~ +55°C

Note: *for more details, please refer to the User's manual of the EUT.*

3 SUMMARY OF TEST RESULT

FCC Part Clause	Test Parameter	Verdict	Remark
15.247(a)(2)	DTS (6dB) Bandwidth	PASS	
15.247(b)(3)	Maximum Peak Conducted Output Power	PASS	
15.247(e)	Maximum Power Spectral Density Level	PASS	
15.247(d)	Unwanted Emission Into Non-Restricted Frequency Bands	PASS	
15.247(d) 15.209	Unwanted Emission Into Restricted Frequency Bands (conducted)	PASS	
15.247(d) 15.209	Radiated Spurious Emission	PASS	
15.207	Conducted Emission Test	N/A	
15.247(b)	Antenna Application	PASS	
	NOTE1: N/A (Not Applicable) NOTE2: According to FCC OET KDB 558074, the report use radiated measurements in the restricted frequency bands. In addition, the radiated test is also performed to ensure the emissions emanating from the device cabinet also comply with the applicable limits.		

RELATED SUBMITTAL(S) / GRANT(S):

This submittal(s) (test report) is intended for FCC ID: 2AE6L-ML10B filing to comply with Section 15.247 of the FCC Part 15.

4 TEST METHODOLOGY

4.1 GENERAL DESCRIPTION OF APPLIED STANDARDS

According to its specifications, the EUT must comply with the requirements of the following standards:
FCC 47 CFR Part 2, Subpart J
FCC 47 CFR Part 15, Subpart C
FCC KDB 558074 D01 DTS Meas Guidance v03r02

4.2 MEASUREMENT EQUIPMENT USED

4.2.1 Conducted Emission Test Equipment

EQUIPMENT TYPE	MFR	MODEL NUMBER	SERIAL NUMBER	LAST CAL.	DUE CAL.
Test Receiver	Rohde & Schwarz	ESCS30	828985/018	05/16/2015	05/15/2016
L.I.S.N.	Schwarzbeck	NNLK8129	8129203	05/16/2015	05/15/2016
50Ω Coaxial Switch	Anritsu	MP59B	M20531	N/A	05/15/2016
Pulse Limiter	Rohde & Schwarz	ESH3-Z2	100006	05/16/2015	05/15/2016
Voltage Probe	Rohde & Schwarz	TK9416	N/A	05/16/2015	05/15/2016
I.S.N	Rohde & Schwarz	ENY22	1109.9508.02	05/16/2015	05/15/2016

4.2.2 Radiated Emission Test Equipment

EQUIPMENT TYPE	MFR	MODEL NUMBER	SERIAL NUMBER	LAST CAL.	DUE CAL.
EMI Test Receiver	Rohde & Schwarz	ESU	1302.6005.26	05/16/2015	05/15/2016
Pre-Amplifier	HP	8447D	2944A07999	05/16/2015	05/15/2016
Bilog Antenna	Schwarzbeck	VULB9163	142	05/16/2015	05/15/2016
Loop Antenna	ARA	PLA-1030/B	1029	05/16/2015	05/15/2016
Horn Antenna	Schwarzbeck	BBHA 9170	BBHA9170399	05/16/2015	05/15/2016
Horn Antenna	Schwarzbeck	BBHA 9120	D143	05/16/2015	05/15/2016
Cable	Schwarzbeck	AK9513	ACRX1	05/16/2015	05/15/2016
Cable	Rosenberger	N/A	FP2RX2	05/16/2015	05/15/2016
Cable	Schwarzbeck	AK9513	CRPX1	05/16/2015	05/15/2016
Cable	Schwarzbeck	AK9513	CRRX2	05/16/2015	05/15/2016

4.2.3 Radio Frequency Test Equipment

EQUIPMENT TYPE	MFR	MODEL NUMBER	SERIAL NUMBER	LAST CAL.	DUE CAL.
Spectrum Analyzer	Agilent	E4407B	88156318	05/16/2015	05/15/2016
Signal Analyzer	Agilent	N9010A	My53470879	05/16/2015	05/15/2016
Power meter	Anritsu	ML2495A	0824006	05/16/2015	05/15/2016
Power sensor	Anritsu	MA2411B	0738172	05/16/2015	05/15/2016

Remark: *Each piece of equipment is scheduled for calibration once a year.*

4.3 DESCRIPTION OF TEST MODES

The EUT has been tested under its typical operating condition.
The EUT configuration for testing is installed on RF field strength measurement to meet the Commissions requirement and operating in a manner which intends to maximize its emission characteristics in a continuous normal application.

The Transmitter was operated in the normal operating mode. The TX frequency was fixed which was for the purpose of the measurements.

Test of channel included the lowest and middle and highest frequency to perform the test, then record on this report.

Those data rates (Bluetooth 4.0 DTS :1Mbps) were used for all test.

Pre-defined engineering program for regulatory testing used to control the EUT for staying in continuous transmitting and receiving mode is programmed.

Frequency and Channel list for Bluetooth 4.0 DTS:

Channel	Frequency (MHz)	Channel	Frequency (MHz)	Channel	Frequency (MHz)
0	2402	19	2440	…	…
1	2404	20	2442	37	2476
2	2406	21	2444	38	2478
…	…	…	…	39	2480
Note: fc=2402MHz+k×1MHz k=1 to 39					

Test Frequency and channel for Bluetooth 4.0 DTS:

Lowest Frequency		Middle Frequency		Highest Frequency	
Channel	Frequency (MHz)	Channel	Frequency (MHz)	Channel	Frequency (MHz)
0	2402	19	2440	39	2480

5 FACILITIES AND ACCREDITATIONS

5.1 FACILITIES

All measurement facilities used to collect the measurement data are located at

Bldg 69, Majialong Industry Zone District, Nanshan District, Shenzhen, China
The sites are constructed in conformance with the requirements of ANSI C63.7, ANSI C63.10 and CISPR Publication 22.

5.2 LABORATORY ACCREDITATIONS AND LISTINGS

Site Description

EMC Lab. : Accredited by CNAS, 2013.10.28
The certificate is valid until 2016.10.29
The Laboratory has been assessed and proved to be in compliance with CNAS-CL01: 2006(identical to ISO/IEC17025: 2005)
The Certificate Registration Number is L229

: Accredited by TUV Rheinland Shenzhen, 2010.5.25
The Laboratory has been assessed according to the requirements ISO/IEC 17025.

: Accredited by FCC, October 28, 2010
The Certificate Registration Number is 406365.

: Accredited by FCC, February 28, 2013
The Certificate Registration Number is 709623.

: Accredited by Industry Canada, May 24, 2008
The Certificate Registration Number is 4480A-2

6 TEST SYSTEM UNCERTAINTY

The following measurement uncertainty levels have been estimated for tests performed on the apparatus:

Parameter	Uncertainty
Radio Frequency	±1x10^-5
Maximum Peak Output Power Test	±1.0dB
Conducted Emissions Test	±2.0dB
Radiated Emission Test	±2.0dB
Power Density	±2.0dB
Occupied Bandwidth Test	±1.0dB
Band Edge Test	±3dB
All emission, radiated	±3dB
Antenna Port Emission	±3dB
Temperature	±0.5℃
Humidity	±3%

Measurement Uncertainty for a level of Confidence of 95%

7 SETUP OF EQUIPMENT UNDER TEST

7.1 RADIO FREQUENCY TEST SETUP 1

The Bluetooth 4.0 DTS component's antenna ports(s) of the EUT are connected to the measurement instrument per an appropriate attenuator. The EUT is controlled by PC/software to emit the specified signals for the purpose of measurements.

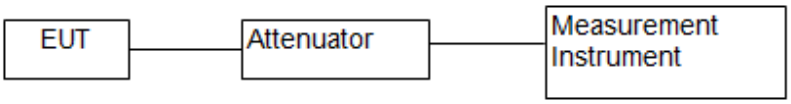

7.2 RADIO FREQUENCY TEST SETUP 2

The test site semi-anechoic chamber has met the requirement of NSA tolerance 4 dB according to the standards: ANSI C63.10. The test distance is 3m.The setup is according to the requirements in Section 13.1.4.1 of ANSI C63.10-2013 and CAN/CSA-CEI/IEC CISPR 22.

Below 30MHz：

The EUT is placed on a turntable 0.8 meters above the ground in the chamber, 3 meter away from the antenna (loop antenna). The Antenna should be positioned with its plane vertical at the specified distance from the EUT and rotated about its vertical axis for maximum response at each azimuth about the EUT. The center of the loop shall be 1 m above the ground. For certain applications, the loop antenna plane may also need to be positioned horizontally at the specified distance from the EUT.

30GHz-1GHz：

The EUT is placed on a turntable 0.8 meters above the ground in the chamber, 3 meter away from the antenna. The maximal emission value is acquired by adjusting the antenna height, polarisation and turntable azimuth. Normally, the height range of antenna is 1 m to 4 m, the azimuth range of turntable is 0° to 360°, and the receive antenna has two polarizations Vertical (V) and Horizontal (H).

Above 1GHz：

The EUT is placed on a turntable 1.5 meters above the ground in the chamber, 3 meter away from the antenna. The maximal emission value is acquired by adjusting the antenna height, polarisation and turntable azimuth. Normally, the height range of antenna is 1 m to 4 m, the azimuth range of turntable is 0° to 360°, and the receive antenna has two polarizations Vertical (V) and Horizontal (H).

(a) Radiated Emission Test Set-Up, Frequency Below 30MHz

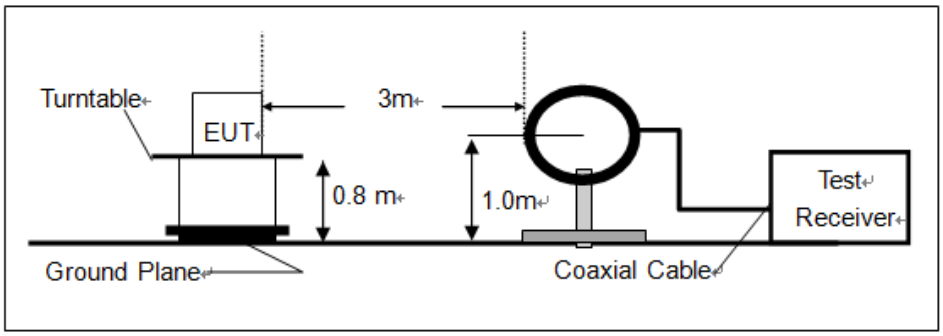

(b) Radiated Emission Test Set-Up, Frequency Below 1000MHz

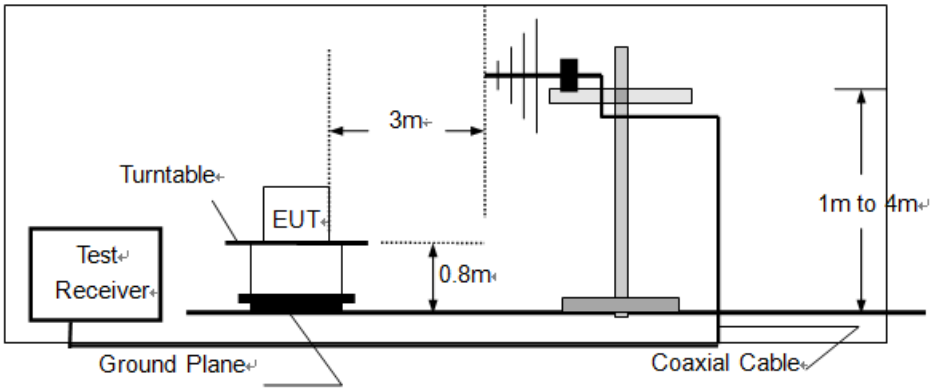

(c) Radiated Emission Test Set-Up, Frequency above 1000MHz

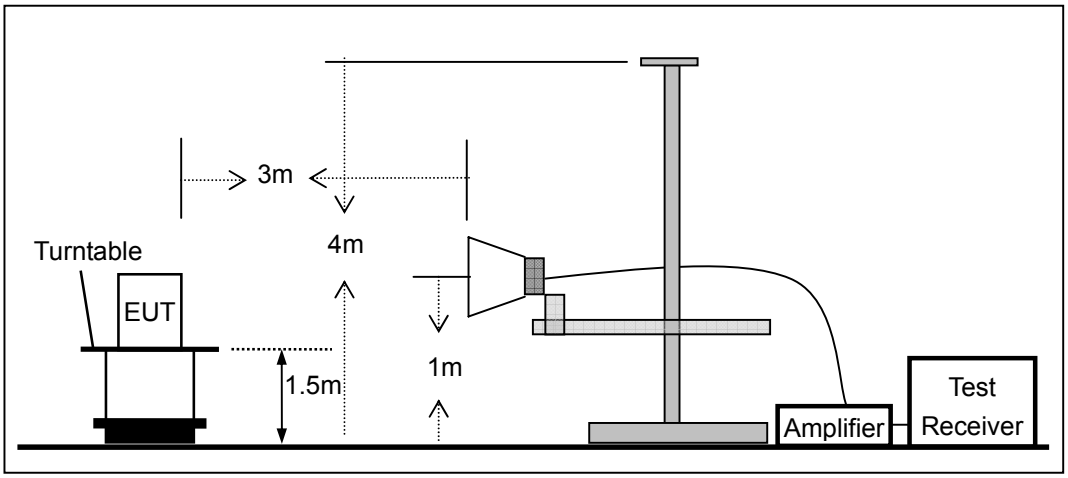

7.3 CONDUCTED EMISSION TEST SETUP

The mains cable of the EUT (maybe per AC/DC Adapter) must be connected to LISN. The LISN shall be placed 0.8 m from the boundary of EUT and bonded to a ground reference plane for LISN mounted on top of the ground reference plane. This distance is between the closest points of the LISN and the EUT. All other units of the EUT and associated equipment shall be at least 0.8m from the LISN.

Ground connections, where required for safety purposes, shall be connected to the reference ground point of the LISN and, where not otherwise provided or specified by the manufacturer, shall be of same length as the mains cable and run parallel to the mains connection at a separation distance of not more than 0.1 m.

According to the requirements in Section 13.1.4.1 of ANSI C63.10-2013 Conducted emissions from the EUT measured in the frequency range between 0.15 MHz and 30 MHz using CISPR Quasi-Peak and average detector mode.

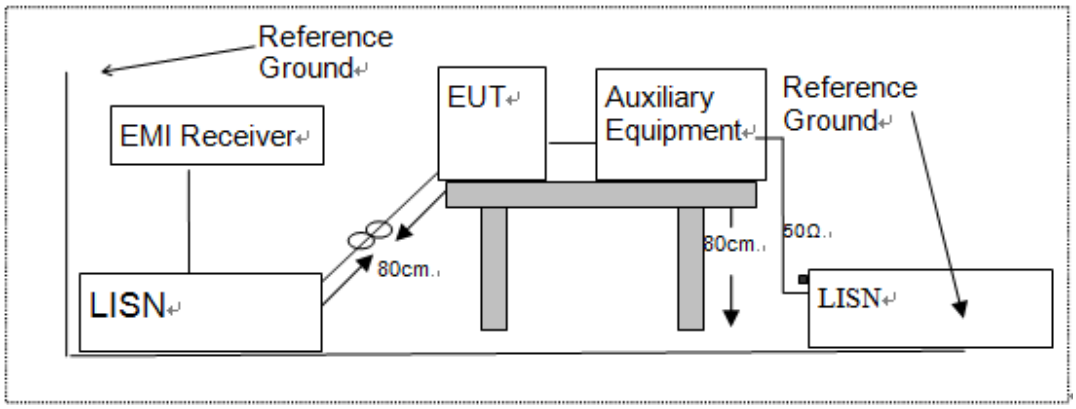

7.4 SUPPORT EQUIPMENT

Item	Equipment	Mfr/Brand	Model/Type No.	Series No.	Note
1.					

Notes:

1. *All the equipment/cables were placed in the worst-case configuration to maximize the emission during the test.*
2. *Grounding was established in accordance with the manufacturer's requirements and conditions for the intended use.*

8 TEST REQUIREMENTS

8.1 DTS 6DB BANDWIDTH

8.1.1 Applicable Standard

According to FCC Part 15.247(a)(2) and KDB 558074 DTS 01 Meas. Guidance v03r02

8.1.2 Conformance Limit

The minimum -6 dB bandwidth shall be at least 500 kHz.

8.1.3 Test Configuration

Test according to clause 7.1 radio frequency test setup 1

8.1.4 Test Procedure

The EUT was operating in Bluetooth 4.0DTS mode and controlled its channel. Printed out the test result from the spectrum by hard copy function.
The RF output of EUT was connected to the spectrum analyzer by RF cable and attenuator. The path loss was compensated to the results for each measurement.
Set to the maximum power setting and enable the EUT transmit continuously
Set RBW = 100 kHz.
Set the video bandwidth (VBW) =300 kHz.
Set Span=2 times OBW
Set Detector = Peak.
Set Trace mode = max hold.
Set Sweep = auto couple.
Allow the trace to stabilize.
Measure the maximum width of the emission that is constrained by the frequencies associated with the two outermost amplitude points (upper and lower frequencies) that are attenuated by 6 dB relative to the maximum level measured in the fundamental emission.
Measure and record the results in the test report.

Test Results

Temperature :	28°C	Test Date :	June 15, 2015
Humidity :	55 %	Test By:	KK

Operation Mode	Channel Number	Channel Frequency (MHz)	Measurement Bandwidth (kHz)	Limit (kHz)	Verdict
Bluetooth 4.0 DTS	0	2402	806.2	>500	PASS
	19	2440	803.6	>500	PASS
	39	2480	803.9	>500	PASS

Test Model	DTS (6dB) Bandwidth Bluetooth4.0DTS Channel 0: 2402MHz

Test Model	DTS (6dB) Bandwidth Bluetooth4.0DTS Channel 19: 2440MHz

Test Model	DTS (6dB) Bandwidth Bluetooth4.0DTS Channel 39: 2480MHz

8.2 MAXIMUM PEAK CONDUCTED OUTPUT POWER

8.2.1 Applicable Standard

According to FCC Part 15.247(b)(3) and KDB 558074 DTS 01 Meas. Guidance v03r02

8.2.2 Conformance Limit

The maximum peak conducted output power of the intentional radiator for systems using digital modulation in the 2400 - 2483.5 MHz bands shall not exceed: 1 Watt (30dBm).

8.2.3 Test Configuration

Test according to clause 7.1 radio frequency test setup 1

8.2.4 Test Procedure

■ According to FCC Part15.247(b)(3)
As an alternative to a peak power measurement, compliance with the one Watt limit can be based on a measurement of the maximum conducted output power. For smart system, Maximum Conducted Output Power is defined as the total transmit power delivered to all antennas and antenna elements averaged across all symbols in the signaling alphabet when the transmitter is operating at its maximum power control level. Power must be summed across all antennas and antenna elements. If multiple modes of operation are possible (e.g., alternative modulation methods), the maximum conducted output power is the highest total transmit power occurring in any mode.
Set the RBW ≧DTS bandwidth(about 1MHz). Set VBW =3*RBW(about 3MHz)
Set the span ≧3*RBW
Set Sweep time = auto couple.
Set Detector = peak. Set Trace mode = max hold.
Allow trace to fully stabilize. Use peak marker function to determine the peak amplitude level.
■ According to FCC Part 15.247(b)(4):
Conducted output power limit specified in paragraph (b) of this section is based on the use of antennas with directional gains that do not exceed 6 dBi. If transmitting antennas of directional gain greater than 6 dBi are used, the conducted output power from the intentional radiator shall be reduced below the stated values in paragraphs (b)(3) of this section, as appropriate, by the amount in dB that the directional gain of the antenna exceeds 6 dBi.

Test Results

Temperature :	28°C	Test Date :	June 15, 2015
Humidity :	55 %	Test By:	KK

Operation Mode	Channel Number	Channel Frequency (MHz)	Measurement Level (dBm)	Limit (dBm)	Verdict
Bluetooth 4.0DTS	0	2402	1.601	30	PASS
	19	2440	1.364	30	PASS
	39	2480	1.170	30	PASS

8.3 MAXIMUM POWER SPECTRAL DENSITY

8.3.1 Applicable Standard

According to FCC Part 15.247(e) and KDB 558074 DTS 01 Meas. Guidance v03r02

8.3.2 Conformance Limit

The transmitter power spectral density conducted from the transmitter to the antenna shall not be greater than 8 dBm in any 3 kHz band during any time interval of continuous transmission.

8.3.3 Test Configuration

Test according to clause 7.1 radio frequency test setup 1

8.3.4 Test Procedure

This procedure shall be used if maximum peak conducted output power was used to demonstrate compliance
The transmitter output (antenna port) was connected to the spectrum analyzer
Set analyzer center frequency to DTS channel center frequency.
Set the span to 1.5 times the DTS bandwidth.
Set the RBW to: 3 kHz
Set the VBW to: 10 kHz.
Set Detector = peak.
Set Sweep time = auto couple.
Set Trace mode = max hold.
Allow trace to fully stabilize.
Use the peak marker function to determine the maximum amplitude level within the RBW.

8.3.5 Test Results

Temperature :	28°C	Test Date :	June 15, 2015
Humidity :	55 %	Test By:	KK

Operation Mode	Channel Number	Channel Frequency (MHz)	Measurement Level (dBm/3kHz)	Limit (dBm/3kHz)	Verdict
Bluetooth 4.0 DTS	0	2402	-10.328	8	PASS
	19	2440	-10.626	8	PASS
	39	2480	-11.884	8	PASS
Note: N/A					

Test Model	Power Spectral Density Bluetooth 4.0 DTS Channel 0: 2402MHz

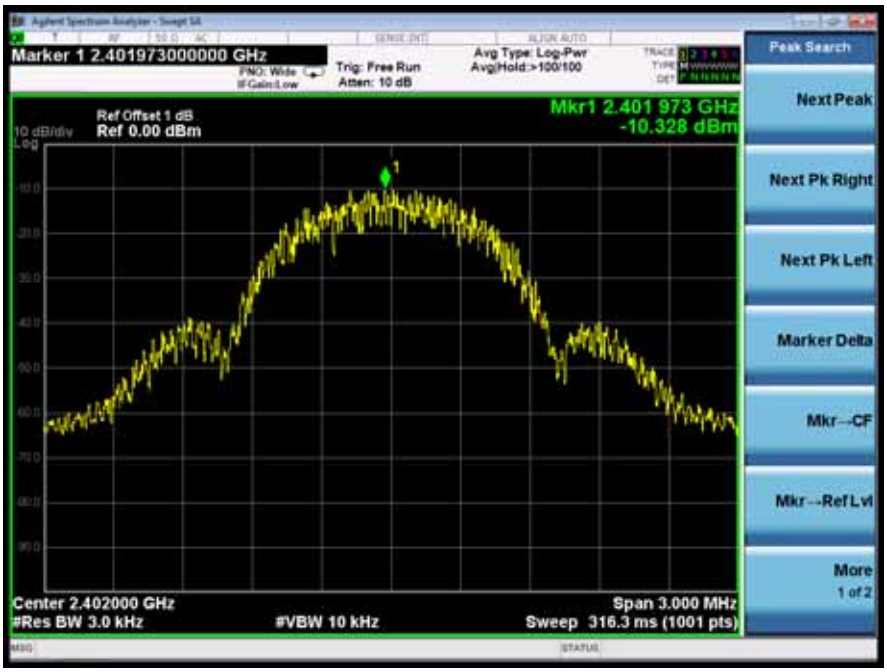

Test Model	Power Spectral Density Bluetooth 4.0 DTS Channel 19: 2440MHz

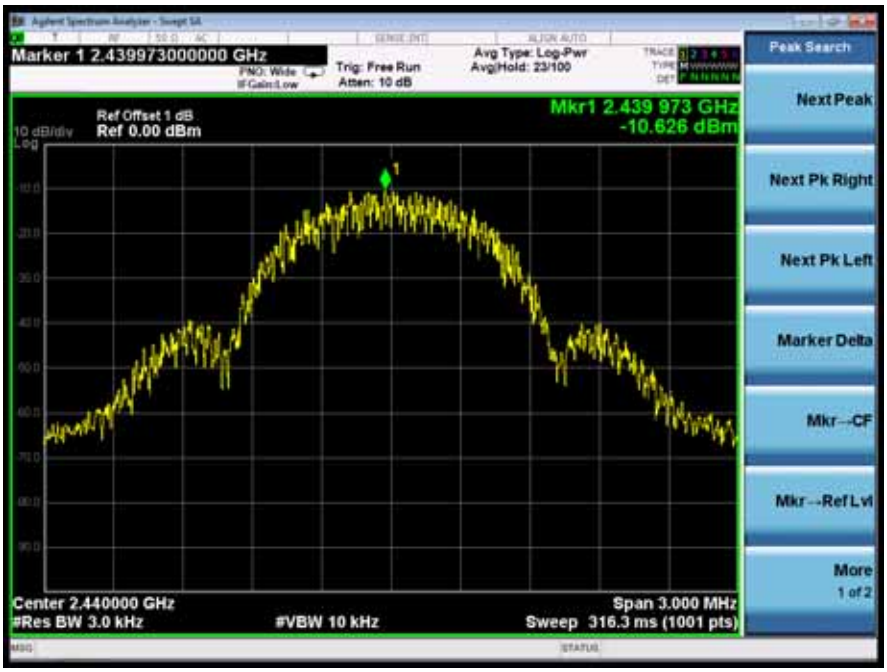

Test Model	Power Spectral Density Bluetooth 4.0 DTS Channel 39: 2480MHz

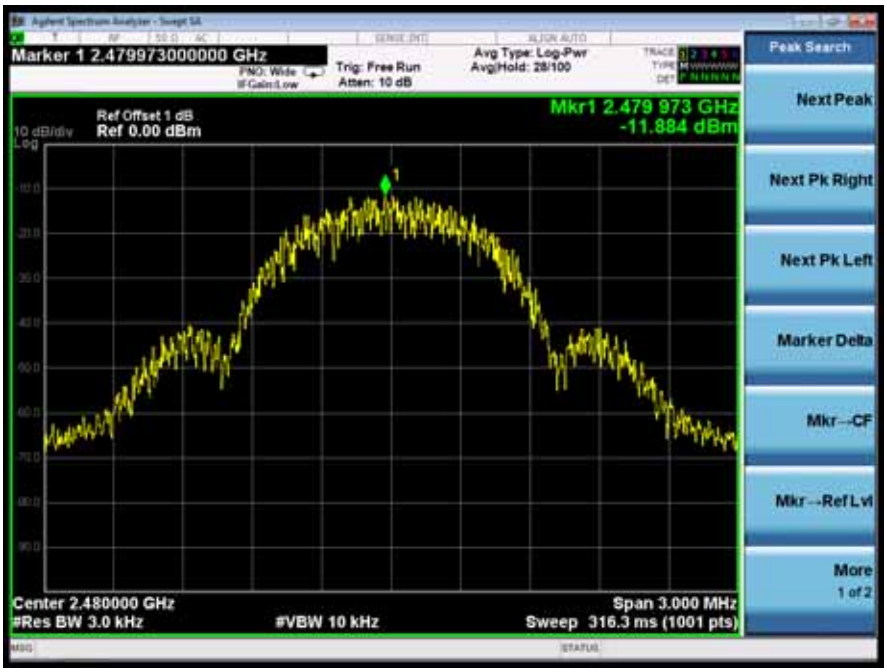

8.4 UNWANTED EMISSIONS IN NON-RESTRICTED FREQUENCY BANDS

8.4.1 Applicable Standard

According to FCC Part 15.247(d) and KDB 558074 DTS 01 Meas. Guidance v03r02

8.4.2 Conformance Limit

According to FCC Part 15.247(d):
In any 100 kHz bandwidth outside the frequency band in which the spread spectrum or digitally modulated intentional radiator is operating, the radio frequency power that is produced by the intentional radiator shall be at least 20 dB below that in the 100 kHz bandwidth within the band that contains the highest level of the desired power, based on either an RF conducted or a radiated measurement, provided the transmitter demonstrates compliance with the peak conducted power limits. If the transmitter complies with the conducted power limits based on the use of RMS averaging over a time interval, as permitted under paragraph (b)(3) of this section, the attenuation required under this paragraph shall be 30 dB instead of 20 dB.

8.4.3 Test Configuration

Test according to clause 7.1 radio frequency test setup 1

8.4.4 Test Procedure

The transmitter output (antenna port) was connected to the spectrum analyzer

- **Reference level measurement**

Establish a reference level by using the following procedure:
Set instrument center frequency to DTS channel center frequency.
Set the span to = 1.5 times the DTS bandwidth.
Set the RBW = 100 kHz.
Set the VBW ≥ 3 x RBW.
Set Detector = peak.
Set Sweep time = auto couple.
Set Trace mode = max hold.
Allow trace to fully stabilize.
Use the peak marker function to determine the maximum PSD level.
Note that the channel found to contain the maximum PSD level can be used to establish the reference level.

- **Emission level measurement**

Set the center frequency and span to encompass frequency range to be measured.
Set the RBW = 100 kHz.
Set the VBW =300 kHz.
Set Detector = peak
Sweep time = auto couple.
Trace mode = max hold.
Allow trace to fully stabilize.
Use the peak marker function to determine the maximum amplitude level.
Ensure that the amplitude of all unwanted emissions outside of the authorized frequency band (excluding restricted frequency bands) are attenuated by at least the minimum requirements . Report the three highest emissions relative to the limit.

8.4.5 Test Results

Test Model	PSD(Power Spectral Density) RBW=100kHz Bluetooth 4.0 DTS Channel 0: 2402MHz

Test Model	Unwanted Emissions in non-restricted frequency bands Bluetooth 4.0 DTS Channel 0: 2402MHz

Test Model	Band edge Bluetooth 4.0 DTS Channel 0: 2402MHz

Test Model	PSD(Power Spectral Density) RBW=100kHz Bluetooth 4.0 DTS Channel 19: 2440MHz

Test Model	Unwanted Emissions In Non-Restricted Frequency Bands Bluetooth 4.0 DTS Channel 19: 2440MHz

Test Model	PSD(Power Spectral Density) RBW=100kHz Bluetooth 4.0 DTS Channel 39: 2480MHz

Test Model	Unwanted Emissions In Non-Restricted Frequency Bands Bluetooth 4.0 DTS Channel 39: 2480MHz

Test Model	Band edge Bluetooth 4.0 DTS Channel 39: 2480MHz

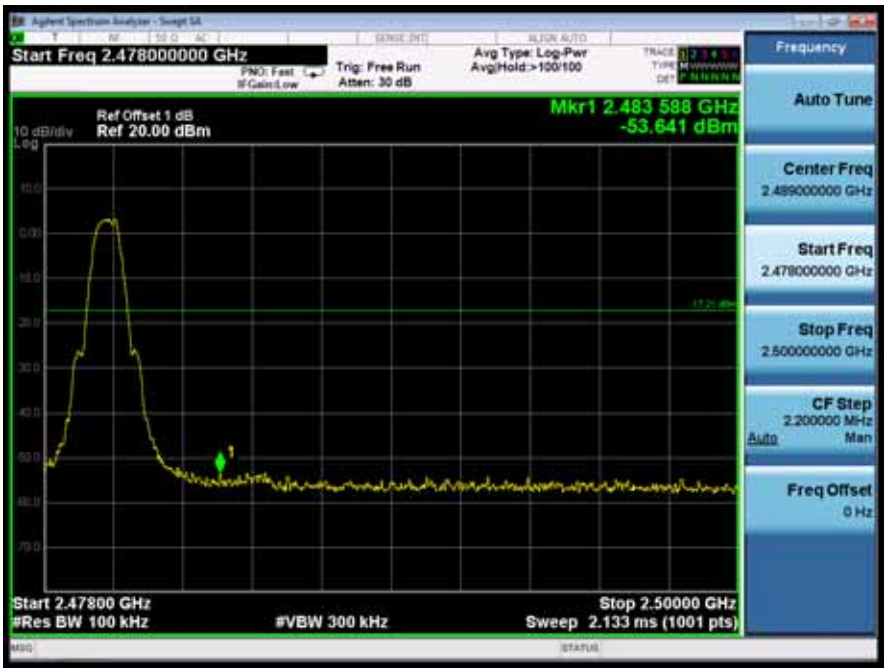

8.5 RADIATED SPURIOUS EMISSION

8.5.1 Applicable Standard

According to FCC Part 15.247(d) and 15.209 and KDB 558074 DTS 01 Meas. Guidance v03r02

8.5.2 Conformance Limit

According to FCC Part 15.247(d): radiated emissions which fall in the restricted bands, as defined in §15.205(a), must also comply with the radiated emission limits specified in §15.209(a) (see §15.205(c)).
According to FCC Part15.205, Restricted bands

MHz	MHz	MHz	GHz
0.090-0.110	16.42-16.423	399.9-410	4.5-5.15
10.495-0.505	16.69475-16.69525	608-614	5.35-5.46
2.1735-2.1905	16.80425-16.80475	960-1240	7.25-7.75
4.125-4.128	25.5-25.67	1300-1427	8.025-8.5
4.17725-4.17775	37.5-38.25	1435-1626.5	9.0-9.2
4.20725-4.20775	73-74.6	1645.5-1646.5	9.3-9.5
6.215-6.218	74.8-75.2	1660-1710	10.6-12.7
6.26775-6.26825	123-138	2200-2300	14.47-14.5
8.291-8.294	149.9-150.05	2310-2390	15.35-16.2
8.362-8.366	156.52475-156.52525	2483.5-2500	17.7-21.4
8.37625-8.38675	156.7-156.9	2690-2900	22.01-23.12
8.41425-8.41475	162.0125-167.17	3260-3267	23.6-24.0
12.29-12.293	167.72-173.2	3332-3339	31.2-31.8
12.51975-12.52025	240-285	3345.8-3358	36.43-36.5
12.57675-12.57725	322-335.4	3600-4400	(2)
13.36-13.41			

According to FCC Part15.205, the level of any transmitter spurious emission in Restricted bands shall not exceed the level of the emission specified in the following table

Restricted Frequency(MHz)	Field Strength (μV/m)	Field Strength (dBμV/m)	Measurement Distance
0.009-0.490	2400/F(KHz)	20 log (uV/m)	300
0.490-1.705	2400/F(KHz)	20 log (uV/m)	30
1.705-30	30	29.5	30
30-88	100	40	3
88-216	150	43.5	3
216-960	200	46	3
Above 960	500	54	3

8.5.3 Test Configuration

Test according to clause 7.2 radio frequency test setup 2

8.5.4 Test Procedure

This test is required for any spurious emission that falls in a Restricted Band, as defined in Section 15.205. It must be performed with the highest gain of each type of antenna proposed for use with the EUT. Use the following spectrum analyzer settings:
The EUT was placed on a turn table which is 0.8m above ground plane.
Maximum procedure was performed on the highest emissions to ensure EUT compliance.
Span = wide enough to fully capture the emission being measured
RBW = 1 MHz for f ≥ 1 GHz(1GHz to 25GHz), 100 kHz for f < 1 GHz(30MHz to 1GHz)
VBW ≥ RBW
Sweep = auto
Detector function = peak
Trace = max hold

Follow the guidelines in ANSI C63.10-2013 with respect to maximizing the emission by rotating the EUT, measuring the emission while the EUT is situated in three orthogonal planes (if appropriate), adjusting the measurement antenna height and polarization, etc. A pre-amp and a high pass filter are required for this test, in order to provide the measuring system with sufficient sensitivity. Allow the trace to stabilize. The peak reading of the emission, after being corrected by the antenna factor, cable loss, pre-amp gain, etc., is the peak field strength, which must comply with the limit specified in Section 15.35(b). Submit this data.
Now set the VBW to 10 Hz, while maintaining all of the other instrument settings. This peak level, once corrected, must comply with the limit specified in Section 15.209. If the dwell time per channel of the hopping signal is less than 100 ms, then the reading obtained with the 10 Hz VBW may be further adjusted by a "duty cycle correction factor", derived from 20log(dwell time/100 ms), in an effort to demonstrate compliance with the 15.209 limit. Submit this data.
Repeat above procedures until all frequency measured was complete.

8.5.5 Test Results

■ Spurious Emission below 30MHz (9KHz to 30MHz)

Temperature:	24°C	Test Date:	June 15, 2015
Humidity:	53 %	Test By:	KK
Test mode:	TX Mode		

Freq. (MHz)	Ant.Pol.	Emission Level(dBuV/m)		Limit 3m(dBuV/m)		Over(dB)	
	H/V	PK	AV	PK	AV	PK	AV
--	--	--	--	--	--	--	--

Note: the amplitude of spurious emission that is attenuated by more than 20dB below the permissible limit has no need to be reported.
Distance extrapolation factor =40log(Specific distance/ test distance)(dB);
Limit line=Specific limits(dBuV) + distance extrapolation factor

■ Spurious Emission Above 1GHz (1GHz to 25GHz)
Bluetooth 4.0 DTS mode have been tested, and the worst result was report as below:

Temperature :	28°C	Test Date :	June 15, 2015
Humidity :	55 %	Test By:	KK
Test mode:	Bluetooth 4.0 DTS	Frequency:	Channel 0: 2402MHz

Freq. (MHz)	Ant.Pol.	Emission Level(dBuV/m)		Limit 3m(dBuV/m)		Over(dB)	
	H/V	PK	AV	PK	AV	PK	AV
2196.97	V	53.28	38.33	74.00	54.00	-20.72	-15.67
3182.97	V	54.98	38.93	74.00	54.00	-19.02	-15.07
4032.97	V	52.94	37.23	74.00	54.00	-21.06	-16.77
1856.97	H	58.24	43.33	74.00	54.00	-15.76	-10.67
2077.97	H	57.10	40.93	74.00	54.00	-16.90	-13.07
2587.97	H	57.16	39.33	74.00	54.00	-16.84	-14.67

Temperature :	28°C	Test Date :	June 15, 2015
Humidity :	55 %	Test By:	KK
Test mode:	Bluetooth 4.0 DTS	Frequency:	Channel 19: 2440MHz

Freq. (MHz)	Ant.Pol.	Emission Level(dBuV/m)		Limit 3m(dBuV/m)		Over(dB)	
	H/V	PK	AV	PK	AV	PK	AV
1856.97	V	59.58	39.63	74.00	54.00	-14.42	-14.37
2094.97	V	59.98	40.93	74.00	54.00	-14.02	-13.07
2587.97	V	58.00	37.63	74.00	54.00	-16.00	-16.37
2230.97	H	53.51	37.03	74.00	54.00	-20.49	-16.97
3182.97	H	54.14	37.73	74.00	54.00	-19.86	-16.27
8792.97	H	57.68	40.03	74.00	54.00	-16.32	-13.97

Temperature :	28°C	Test Date :	June 15, 2015
Humidity :	55 %	Test By:	KK
Test mode:	Bluetooth 4.0 DTS	Frequency:	Channel 39: 2480MHz

Freq. (MHz)	Ant.Pol.	Emission Level(dBuV/m)		Limit 3m(dBuV/m)		Over(dB)	
	H/V	PK	AV	PK	AV	PK	AV
2230.97	V	54.14	42.24	74.00	54.00	-19.86	-11.76
3182.97	V	54.86	41.71	74.00	54.00	-19.14	-12.29
8860.97	V	58.56	45.91	74.00	54.00	-15.44	-8.09
1856.97	H	59.20	47.78	74.00	54.00	-14.80	-6.22
2094.97	H	60.36	46.72	74.00	54.00	-13.64	-7.28
2587.97	H	59.28	47.01	74.00	54.00	-14.72	-6.99

Note: (1) All Readings are Peak Value (VBW=3MHz) and Peak Value (VBW=10Hz).
(2) Emission Level= Reading Level+Probe Factor +Cable Loss.
(3) Data of measurement within this frequency range shown " -- " in the table above means the reading of emissions are attenuated more than 20dB below the permissible limits or the field strength is too small to be measured.

■ Spurious Emission in Restricted Band 2310-2390MHz and 2483.5-2500MHz

Temperature :	28°C	Test Date :	June 15, 2015
Humidity :	55 %	Test By:	KK
Test mode:	Bluetooth 4.0 DTS	Frequency:	Channel 0: 2402MHz

Frequency (MHz)	Polarity	PK(dBuV/m) (VBW=3MHz)	Limit 3m (dBuV/m)	Margin (dB)	AV(dBuV/m) (VBW=10Hz)	Limit 3m (dBuV/m)	Margin (dB)
2375.920	H	41.16	74.00	-32.84	30.21	54.00	-23.79
2376.320	V	43.39	74.00	-30.61	31.08	54.00	-22.92

Temperature :	28°C	Test Date :	June 15, 2015
Humidity :	55 %	Test By:	KK
Test mode:	Bluetooth 4.0 DTS	Frequency:	Channel 39: 2480MHz

Frequency (MHz)	Polarity	PK(dBuV/m) (VBW=3MHz)	Limit 3m (dBuV/m)	Margin (dB)	AV(dBuV/m) (VBW=10Hz)	Limit 3m (dBuV/m)	Margin (dB)
2485.563	H	40.76	74.00	-33.24	22.69	54.00	-31.31
2485.331	V	41.03	74.00	-32.97	23.56	54.00	-30.44

Note: (1) All Readings are Peak Value (VBW=3MHz) and Peak Value (VBW=10Hz).
(2) Emission Level= Reading Level+Probe Factor +Cable Loss.
(3) Data of measurement within this frequency range shown " -- " in the table above means the reading of emissions are attenuated more than 20dB below the permissible limits or the field strength is too small to be measured.

All the modulation modes were tested, the data of the worst mode are described in the following table

Test Model	Spurious Emission in Restricted Band 2310-2390MHz Bluetooth 4.0 DTS Channel 0: 2402MHz	H

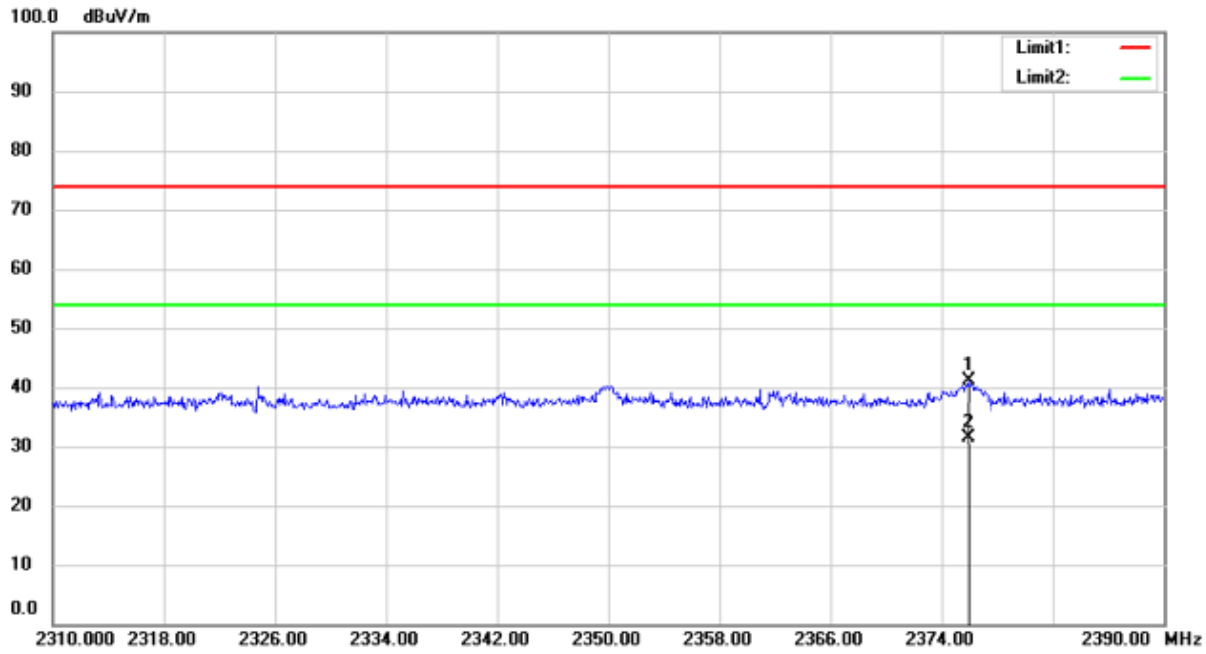

Test Model	Spurious Emission in Restricted Band 2483.5-2500MHz Bluetooth 4.0 DTS Channel 0: 2402MHz	V

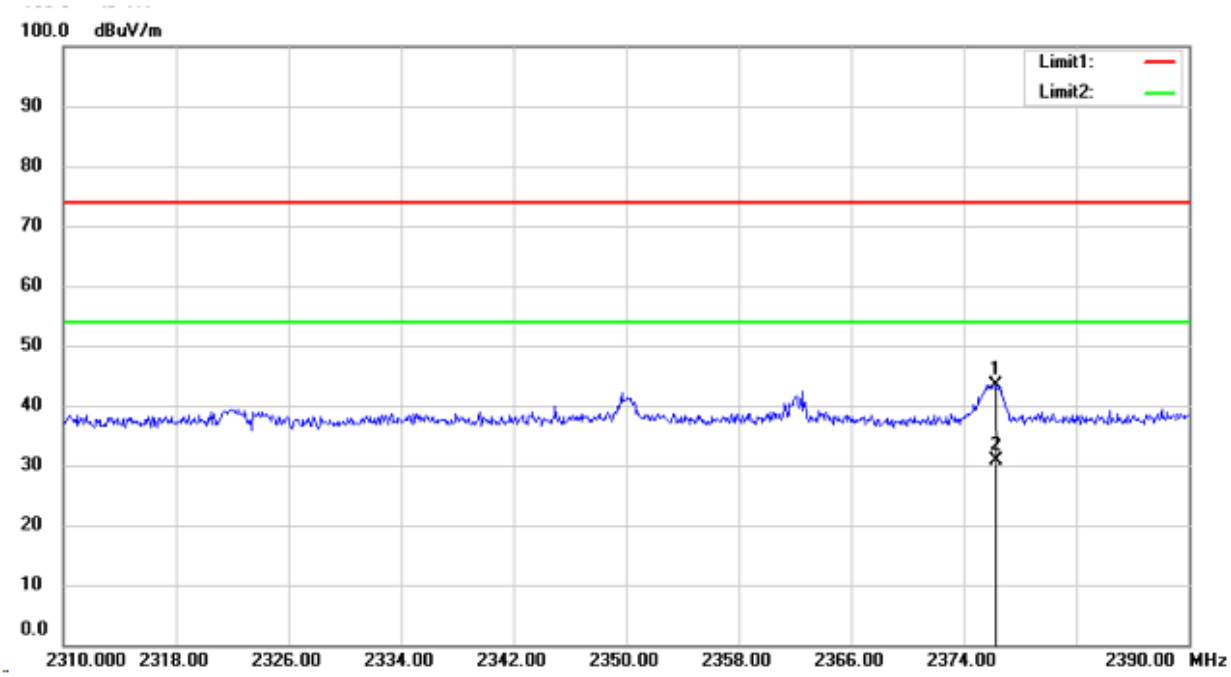

Test Model	Spurious Emission in Restricted Band 2310-2390MHz Bluetooth 4.0 DTS Channel 39: 2480MHz	H

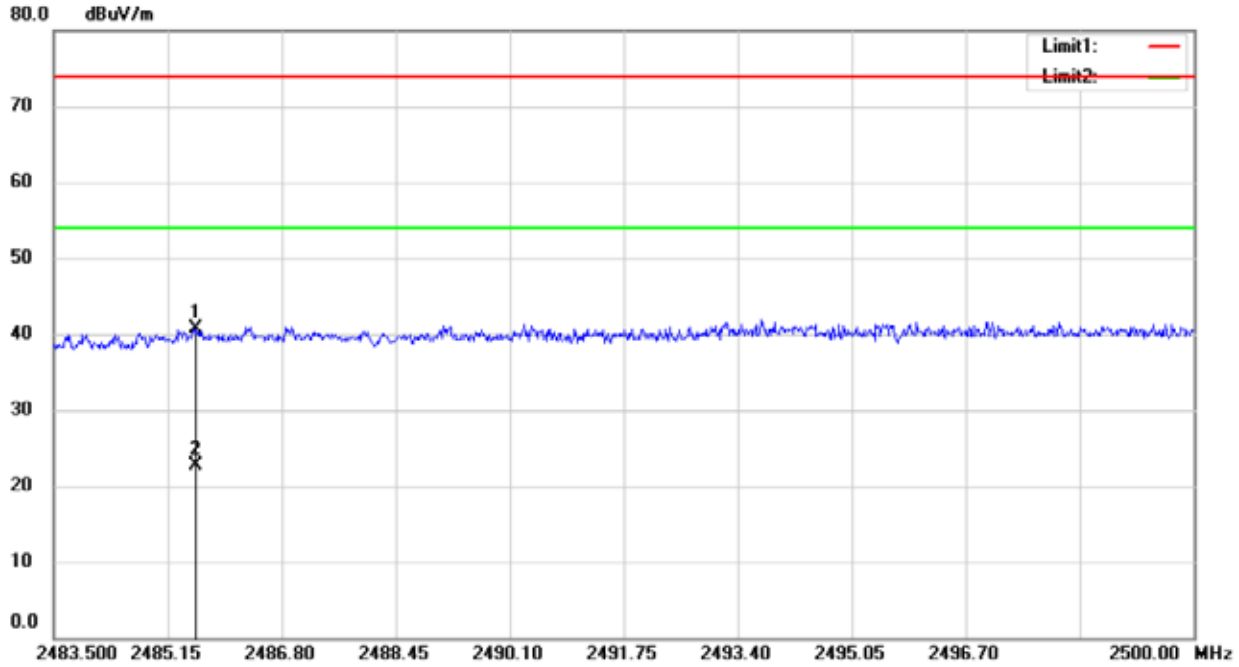

Test Model	Spurious Emission in Restricted Band 2483.5-2500MHz Bluetooth 4.0 DTS Channel 39: 2480MHz	V

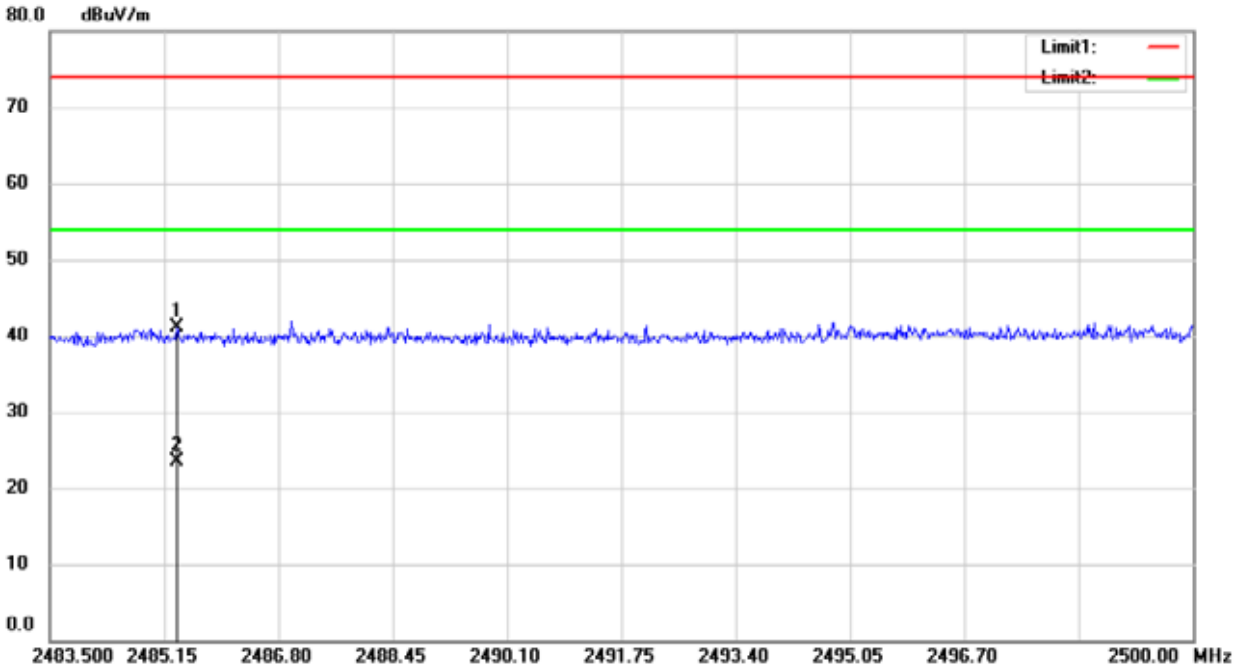

■ Spurious Emission below 1GHz (30MHz to 1GHz)

Bluetooth 4.0 DTS mode have been tested, and the worst result was report as below:

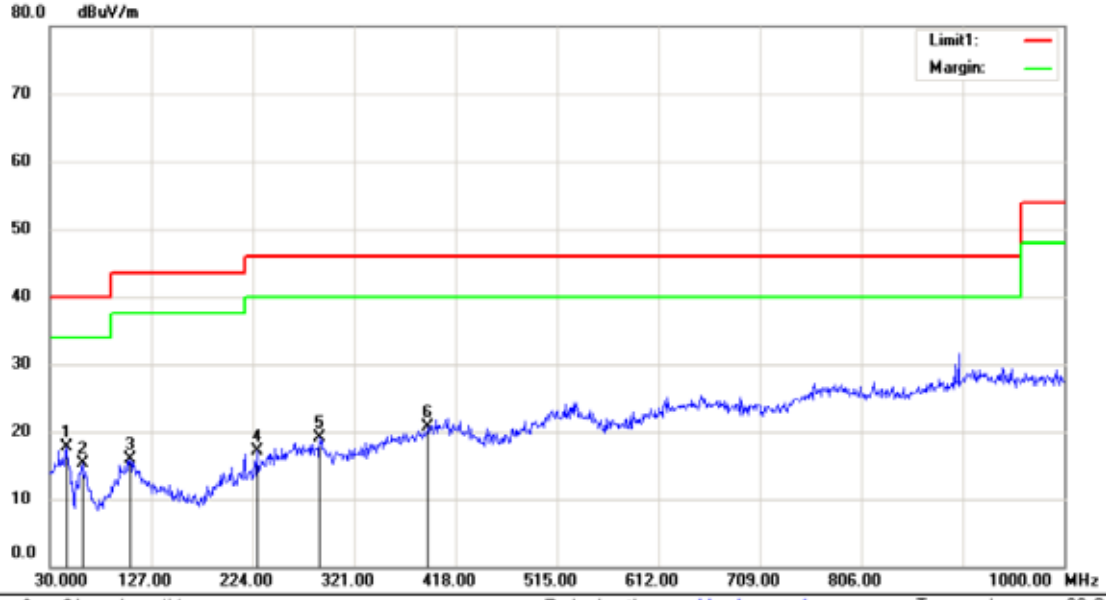

Site 3m Chamber #1 Polarization: *Horizontal* Temperature: 22 C

Limit: (RE)FCC PART 15 C Power: DC 6V Humidity: 50 %

Mode:TX 2402

Note:

No.	Mk.	Freq.	Reading Level	Correct Factor	Measure-ment	Limit	Over		Antenna Height	Table Degree	
		MHz	dBuV	dB	dBuV/m	dBuV/m	dB	Detector	cm	degree	Comment
1	*	45.5200	30.08	-12.37	17.71	40.00	-22.29	QP			
2		61.0400	29.19	-13.92	15.27	40.00	-24.73	QP			
3		106.6300	29.34	-13.45	15.89	43.50	-27.61	QP			
4		227.8800	31.18	-13.99	17.19	46.00	-28.81	QP			
5		288.0200	30.00	-10.90	19.10	46.00	-26.90	QP			
6		391.8100	28.95	-8.29	20.66	46.00	-25.34	QP			

*:Maximum data x:Over limit !:over margin Operator: KK

Site 3m Chamber #1 Polarization: *Vertical* Temperature: 22 C

Limit: (RE)FCC PART 15 C Power: DC 6V Humidity: 50 %

Mode:TX 2402

Note:

No.	Mk.	Freq.	Reading Level	Correct Factor	Measure-ment	Limit	Over		Antenna Height	Table Degree	
		MHz	dBuV	dB	dBuV/m	dBuV/m	dB	Detector	cm	degree	Comment
1	*	47.4600	31.08	-12.67	18.41	40.00	-21.59	peak			
2		60.0700	29.79	-13.43	16.36	40.00	-23.64	peak			
3		105.6600	29.89	-13.43	16.46	43.50	-27.04	peak			
4		280.2600	29.25	-10.87	18.38	46.00	-27.62	peak			
5		404.4200	29.34	-7.98	21.36	46.00	-24.64	peak			
6		525.6700	30.11	-6.08	24.03	46.00	-21.97	peak			

*:Maximum data x:Over limit !:over margin Operator: KK

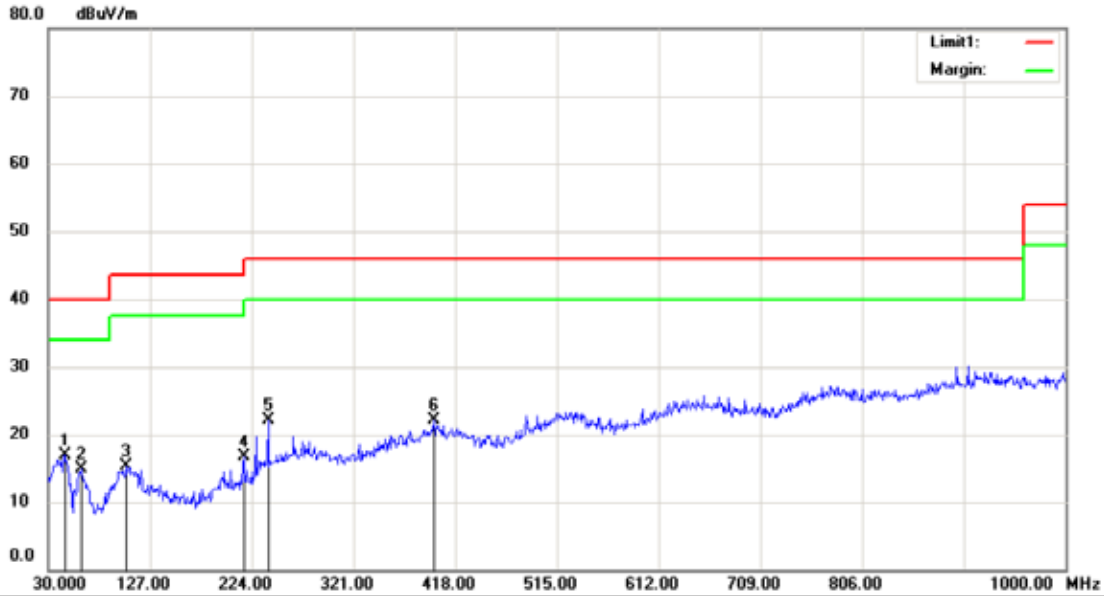

Site 3m Chamber #1 Polarization: ***Horizontal*** Temperature: 22 C

Limit: (RE)FCC PART 15 C Power: DC 6V Humidity: 50 %

Mode:TX 2440

Note:

No.	Mk.	Freq.	Reading Level	Correct Factor	Measure-ment	Limit	Over		Antenna Height	Table Degree	
		MHz	dBuV	dB	dBuV/m	dBuV/m	dB	Detector	cm	degree	Comment
1	*	45.5200	29.32	-12.37	16.95	40.00	-23.05	QP			
2		62.0100	29.35	-14.41	14.94	40.00	-25.06	QP			
3		104.6900	28.68	-13.43	15.25	43.50	-28.25	QP			
4		216.2400	31.84	-15.15	16.69	46.00	-29.31	QP			
5		239.5200	34.65	-12.63	22.02	46.00	-23.98	QP			
6		397.6300	30.19	-8.08	22.11	46.00	-23.89	QP			

*:Maximum data x:Over limit !:over margin Operator: KK

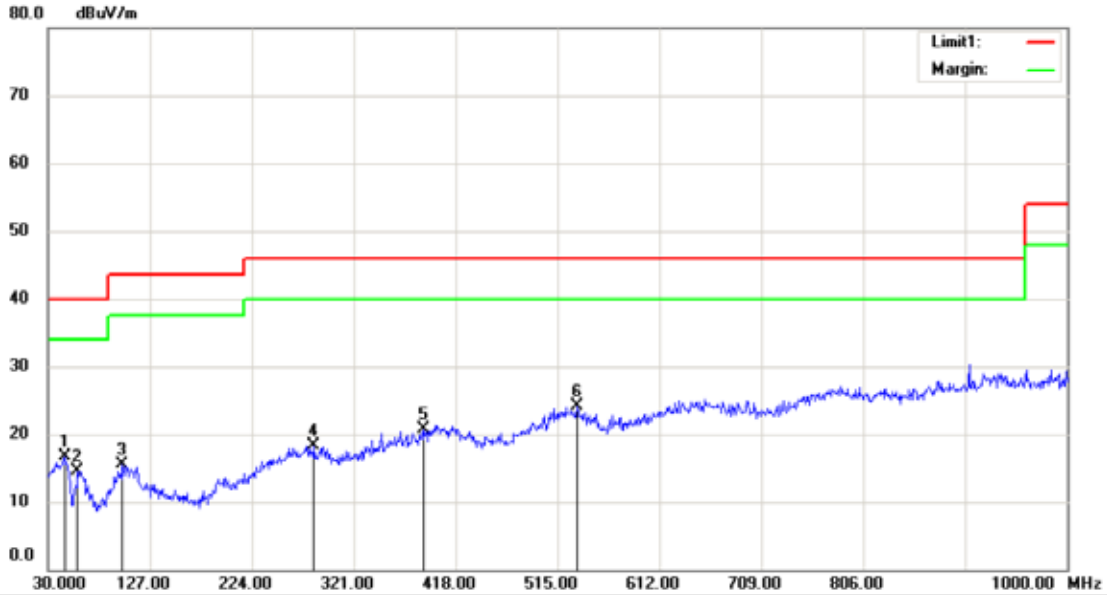

Site 3m Chamber #1 Polarization: *Vertical* Temperature: 22 C

Limit: (RE)FCC PART 15 C Power: DC 6V Humidity: 50 %

Mode:TX 2440

Note:

No.	Mk.	Freq.	Reading Level	Correct Factor	Measure-ment	Limit	Over		Antenna Height	Table Degree	
		MHz	dBuV	dB	dBuV/m	dBuV/m	dB	Detector	cm	degree	Comment
1		45.5200	29.14	-12.37	16.77	40.00	-23.23	QP			
2		58.1300	29.07	-14.54	14.53	40.00	-25.47	QP			
3		100.8100	29.11	-13.57	15.54	43.50	-27.96	QP			
4		283.1700	29.29	-10.89	18.40	46.00	-27.60	QP			
5		387.9300	29.08	-8.47	20.61	46.00	-25.39	QP			
6	*	533.4300	30.29	-6.22	24.07	46.00	-21.93	QP			

*:Maximum data x:Over limit !:over margin Operator: KK

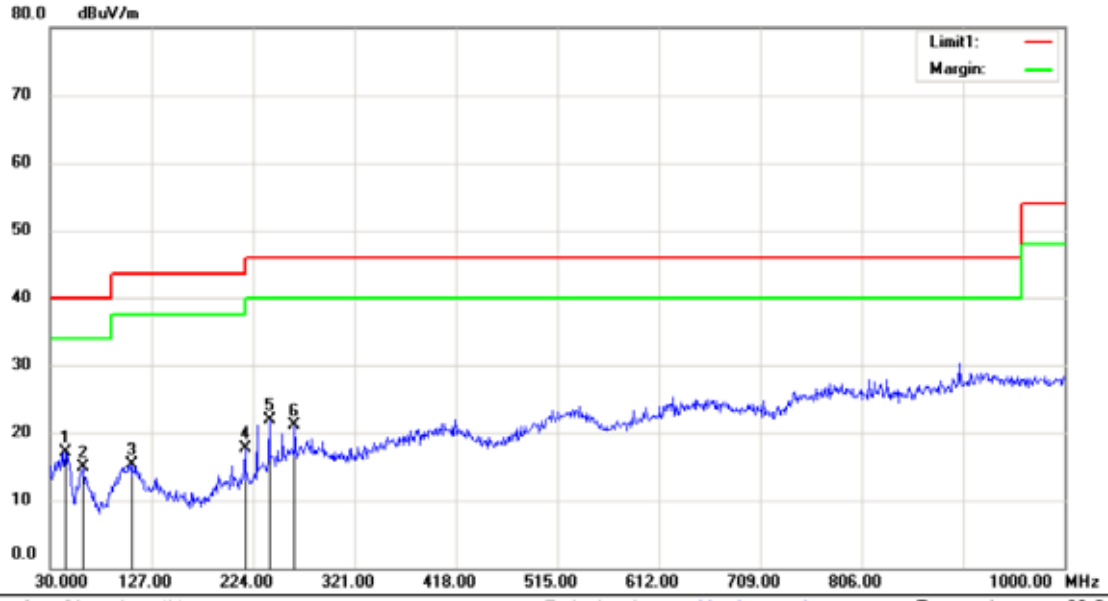

Site 3m Chamber #1 Polarization: *Horizontal* Temperature: 22 C

Limit: (RE)FCC PART 15 C Power: DC 6V Humidity: 50 %

Mode:TX 2480

Note:

No.	Mk.	Freq.	Reading Level	Correct Factor	Measure-ment	Limit	Over		Antenna Height	Table Degree	
		MHz	dBuV	dB	dBuV/m	dBuV/m	dB	Detector	cm	degree	Comment
1	*	44.5500	28.86	-11.71	17.15	40.00	-22.85	QP			
2		62.0100	29.36	-14.41	14.95	40.00	-25.05	QP			
3		107.6000	28.86	-13.47	15.39	43.50	-28.11	QP			
4		216.2400	32.79	-15.15	17.64	46.00	-28.36	QP			
5		239.5200	34.51	-12.63	21.88	46.00	-24.12	QP			
6		263.7700	32.49	-11.29	21.20	46.00	-24.80	QP			

*:Maximum data x:Over limit !:over margin Operator: KK

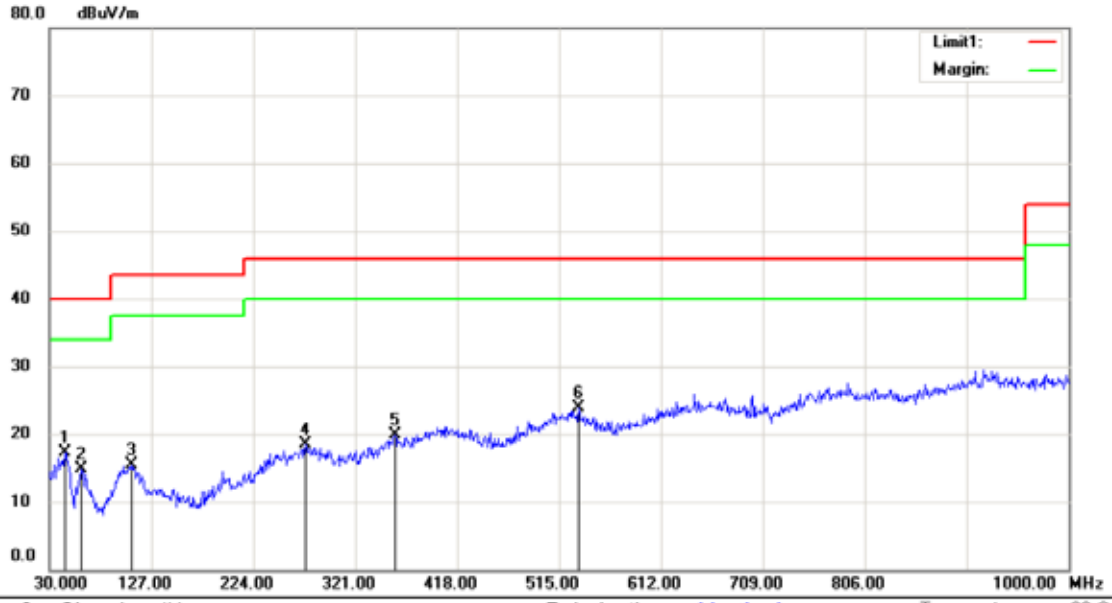

Site 3m Chamber #1 Polarization: *Vertical* Temperature: 22 C

Limit: (RE)FCC PART 15 C Power: DC 6V Humidity: 50 %

Mode:TX 2480

Note:

No.	Mk.	Freq.	Reading Level	Correct Factor	Measure-ment	Limit	Over		Antenna Height	Table Degree	
		MHz	dBuV	dB	dBuV/m	dBuV/m	dB	Detector	cm	degree	Comment
1		44.5500	29.07	-11.71	17.36	40.00	-22.64	QP			
2		60.0700	28.43	-13.43	15.00	40.00	-25.00	QP			
3		108.5700	29.01	-13.48	15.53	43.50	-27.97	QP			
4		273.4700	29.23	-10.77	18.46	46.00	-27.54	QP			
5		358.8300	29.22	-9.39	19.83	46.00	-26.17	QP			
6	*	533.4300	30.08	-6.22	23.86	46.00	-22.14	QP			

*:Maximum data x:Over limit !:over margin Operator: KK

8.6 ANTENNA APPLICATION

8.6.1 Antenna Requirement

Standard	Requirement
FCC CRF Part 15.203	An intentional radiator shall be designed to ensure that no antenna other than that furnished by the responsible party shall be used with the device. The use of a permanently attached antenna or of an antenna that uses a unique coupling to the intentional radiator shall be considered sufficient to comply with the provisions of this section. The manufacturer may design the unit so that a broken antenna can be replaced by the user, but the use of a standard antenna jack or electrical connector is prohibited. This requirement does not apply to carrier current devices or to devices operated under the provisions of §15.211, §15.213, §15.217, §15.219, or §15.221. Further, this requirement does not apply to intentional radiators that must be professionally installed, such as perimeter protection systems and some field disturbance sensors, or to other intentional radiators which, in accordance with §15.31(d), must be measured at the installation site. However, the installer shall be responsible for ensuring that the proper antenna is employed so that the limits in this part are not exceeded.

For intentional device, according to FCC 47 CFR Section 15.203, an intentional radiator shall be designed to ensure that no antenna other than that furnished by the responsible party shall be used with the device. And according to FCC 47 CFR Section 15.247 (b), if transmitting antennas of directional gain greater than 6dBi are used, the power shall be reduced by the amount in dB that the directional gain of the antenna exceeds 6dBi.

8.6.2 Result

The EUT'S antenna is PCB antenna. The antenna's gain is 2.2 dBi, which in accordance to section 15.203, please refer to the internal photos.