# Instruction Manual

MEDIA PLAYER
Trade Mark: Define, smart tv, 4 Green TV
M/N: H800, H600, H500

Manufacturer: Shenzhen Define Technology Co., Ltd.

Please read this manual very carefully before using.
And please keep it properly



## Packing Details

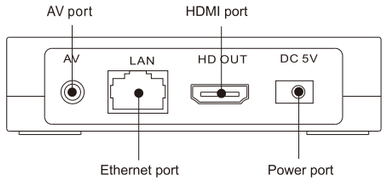




## Installation Specification

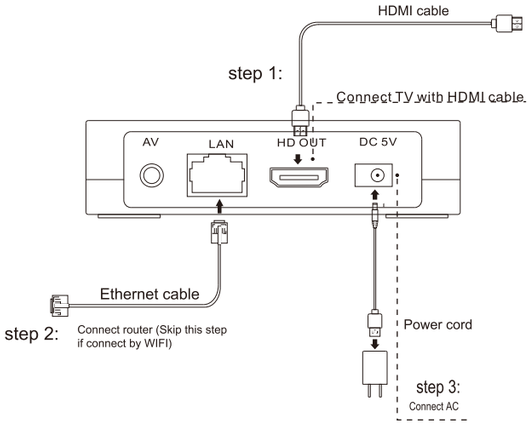




## FAQ

1. How do I use Smart TV Box to watch video?
Connect Smart TV Box to your TV with HDMI cable. Plug an Ethernet cable into Smart TV Box or connect the box using wireless network. Then you could enjoy the movie!

2. How to install Apps?
Please select the page "Apps", and then get into "AppStore", now you can download and install APPs.

3. How to solve when the equipment cannot be powered on?
Please check whether the power cord is correctly connected, check whether the power socket is switched on and check whether the power indicator light is on.

4. How to solve when there is no response, black-screen or abnormal display after the startup of the equipment?
Please check if the HDMI cable is connected correctly and the signal source of TV is switched to the correct display mode (HDMI mode).

5. How to solve insensitivity or no response from the remote control?
Please check if battery of the remote control is installed correctly, change battery if necessary. Make sure no strong light is disturbing the infrared signal.

6. Why the video is not playing very smoothly?
When playing a network video, some 3rd party APPs you installed from AppStore may get stuck due to network issue. Please be noted this is not a product quality issue because those 3rd party APPs usually download video content from servers located in China, so the quality of service cannot be guaranteed.
Many 3rd party video APPs support shift video quality manually among standard definition (SD)/high definition (HD)/super high definition, you can play a network video more smoothly by selecting a lower definition.

7. Why the App reports "This video is restricted in your location"?
Many third party APP you installed from AppStore cannot play copyright-protected programs in your country. Since those Apps are originally designed for mainland of China, this is a copyright issue, not the product quality problem.



## Warranty bill

| | |
|---|---|
| Name | |
| Address | |
| Phone No. | |
| Production type | |
| Machine No. | |
| Purchasing date | |
| Invoice No. | |
| Name of the distributor | (seal) |



## Warranty description

Available in global

Scope for Guarantees

1.In seven days from the purchasing date, the consumer could choose to return/replace or request to repair the product for the problem of quality.
2.In fifteen days from the purchasing date, the consumer could choose to replace the product or request to repair for the problem of quality.
3.From the purchasing date, the host machine would be guaranteed for one year.
4.The warranty period of the remote controller is three months.

Scope for "Non-Guarantees"

1.The normal Coating Damage, discoloration, abrasion and depletion during the using of the product.
2.The machine fault caused by the disassembly or repairing by the consumer arbitrarily without the permission of the company or the inappropriately maintaining.
3.The machine fault or damage caused by the reasons that are not the problem of quality of the product, like the nature disaster or force majeure.
4.The machine No. in the invoice and the warranty bill fulfilled by the consumer is different with the product No. itself.
5.The product certification and the tamper stickers are damaged.
6.There is no invoice or warranty bill, or the warranty bill is not fulfilled or sealed by the distributor.



## The product specification

The product name: MEDIA PLAYER (Smart TV Box)

| | |
|---|---|
| Type: | H800 |
| CPU: | ARM Cortex A7(Quad-Core 1.5GHZ) |
| Operation system: | Android 4.4.2 |
| Memory: | 1GB |
| Flash memory: | 8GB |
| Power supply: | 5V ⎓ 2A |
| Working environment: | Working temperature: 0℃~+45℃ Humidity: <90%<br>Storage temperature: -20℃~+45℃ Humidity:<95% |

Notice:
1. Please keep at least a clearance of 10cm around the equipment.
2. Please keep the equipment out of water.
3. Please keep the product away from the environment of moisture, insolation and high temperature, keep the product away from the magnetic item.
4. Please avoid the casing and interface being scratched, and avoid the damage caused by dropping, throwing and impacting.
5. Please use the exclusive power adapter to avoid damage on the mainboard caused by overcurrent.
6. Please do not disassemble this product arbitrarily. The repair work should be operated by our professional workers only.



**FCC STATEMENT**

This equipment has been tested and found to comply with the limits for a Class B digital device, pursuant to part 15 of the FCC Rules. These limits are designed to provide reasonable protection against harmful interference in a residential installation.
This equipment generates, uses and can radiate radio frequency energy and, if not installed and used in accordance with the instructions, may cause harmful interference to radio communications. However, there is no guarantee that interference will not occur in a particular installation. If this equipment does cause harmful interference to radio or television reception, which can be determined by turning the equipment off and on, the user is encouraged to try to correct the interference by one or more of the following measures:
---Reorient or relocate the receiving antenna.
---Increase the separation between the equipment and receiver.
---Connect the equipment into an outlet on a circuit different from that to which the receiver is connected.
---Consult the dealer or an experienced radio/TV technician for help.
Caution: Any changes or modiycations to this device not explicitly approved by manufacturer could void your authority to operate this equipment.
This device complies with part 15 of the FCC Rules. Operation is subject to the following two conditions: (1) This device may not cause harmful interference, and (2) this device must accept any interference received, including interference that may cause undesired operation.

To comply with FCC RF exposure compliance requirements, this grant is applicable to only mobile configurations. The antennas used for this transmitter must be installed to provide a separation distance of at least 20 cm from all persons and must not be co-located or operating in conjunction with any other antenna or transmitter.

All APPS in Appstore are supplied by 3rd party, please take your own risk to download them.