Ceiling Fan Owner's Manual
Read and Save These Instructions

MODEL: ARLINGTON

TABLE OF CONTENTS

Tools and Materials Required.....1
Unpacking Your Fan 1
Safety Rules.....2
Mounting Options.....3
Hanging the Fan 4-5
Making Electrical Connections.....6
Finishing the Installation.....7
Attaching the Fan Blades.....8
Install the Light Kit 8
Operating Your Fan 9
Care of Your Fan.....10
Troubleshooting..... 10

1. TOOLS AND MATERIALS REQUIRED

- Philips screw driver
- Blade screw driver
- 11 mm wrench
- Step ladder
- Wire cutters

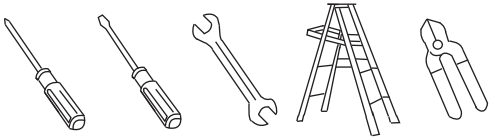

2. PACKAGE CONTENTS

Unpack your fan and check the contents. You should have the following items:

	Parts	Quantity
a.	Blade set	3
b.	Hanger bracket	1
c.	Canopy and Cover	1
d.	Downrod assembly	1
e.	Coupling cover	1
f.	Fan motor assembly	1
g.	Light kit (for with light model) Down cover (for no light model)	1
h.	Lamp shade (for with light model)	1

i. **Screw Package**

1) Mounting hardware :
wood screws (2) , washers (2)
hanger bracket screws (2) & washers (2)
wire nuts (3)

2) Blade attachment hardware:
screws (10),

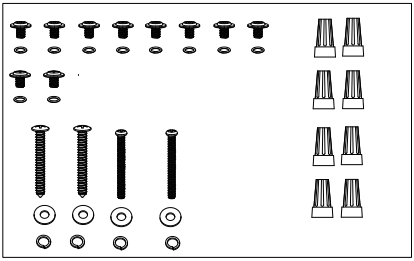

3) Remote Control (1)

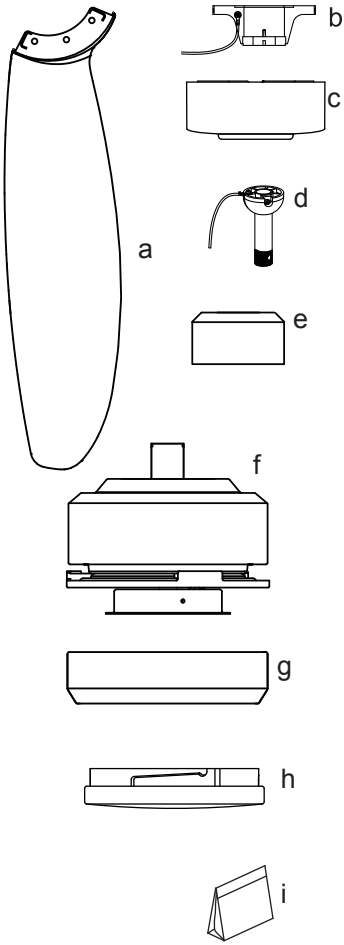

3. SAFETY RULES

1. To reduce the risk of electric shock, insure electricity has been turned off at the circuit breaker or fuse box before beginning.

2. All wiring must be in accordance with the National Electrical Code and local electrical codes. Electrical installation should be performed by a qualified licensed electrician.

3. **WARNING:** To reduce the risk of electrical shock and fire, do not use this fan with any solid-state fan speed control device.

4. **WARNING:** To reduce the risk of personal injury, use only the two steel screws (and lock washers) provided with the outlet box for mounting to the outlet box. Most outlet boxes commonly used for the support of lighting fixtures are not acceptable for fan support and may need to be replaced, consult a qualified electrician if in doubt.

WARNING
TO REDUCE THE RISK OF FIRE, ELECTRIC SHOCK OR PERSONAL INJURY, MOUNT FAN TO OUTLET BOX MARKED "ACCEPTABLE FOR FAN SUPPORT".

5. The outlet box and support structure must be securely mounted and capable of reliably supporting a minimum of 50 pounds. Use only UL Listed outlet boxes marked **"FOR FAN SUPPORT"**.

6. The fan must be mounted with a minimum of 7 feet clearance from the trailing edge of the blades to the floor.

7. Do not operate reversing switch while fan blades are in motion. Fan must be turned off and blades stopped before reversing blade direction.

8. Avoid placing objects in the path of the blades.

9. To avoid personal injury or damage to the fan and other items, be cautious when working around or cleaning the fan.

10. Do not use water or detergents when cleaning the fan or fan blades. A dry dust cloth or lightly dampened cloth will be suitable for most cleaning.

11. After marking electrical connections, spliced conductors should be turned upward and pushed carefully up into outlet box. The wires should be spread apart with the grounded conductor and the equipment-grounding conductor on one side of the outlet box.

12. Electrical diagrams are reference only. Light kit that are not packed with the fan must be UL Listed and marked suitable for use with the model fan you are installing. Switches must be UL General Use Switches. Refer to the Instructions packaged with the light kits and switches for proper assembly.

WARNING
TO REDUCE THE RISK OF PERSONAL INJURY, DO NOT BEND THE BLADE BRACKETS (ALSO REFERRED TO AS FLANGES) DURING ASSEMBLY OR AFTER INSTALLATION. DO NOT INSERT OBJECTS IN THE PATH OF THE BLADES.

4. MOUNTING OPTIONS

If there isn't an existing UL listed mounting box, then read the following instructions. Disconnect the power by removing fuses or turning off circuit breakers.

Secure the outlet box directly to the building structure. Use appropriate fasteners and building materials. The outlet box and its support must be able to fully support the moving weight of the fan (at least 50 lbs). Do not use plastic outlet boxes.

Figures 1,2 and 3 are examples of different ways to mount the outlet box.

Note: You may need a longer downrod to maintain proper blade clearance when installing on a steep, sloped ceiling. (Fig. 3)

***Slop Ceiling Adapter sold separately.**

To hang your fan where there is an existing fixture but no ceiling joist, you may need an installation hanger bar as shown in Figure 4.

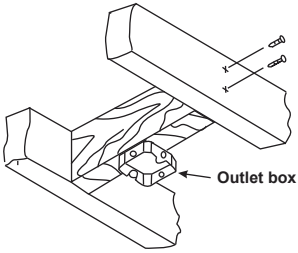

Figure 1

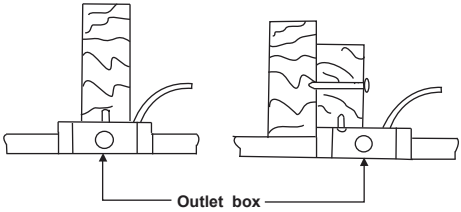

Figure 2

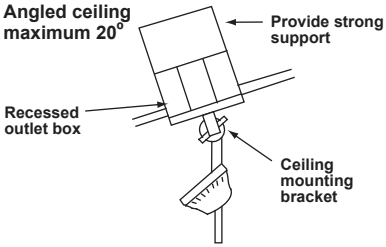

Figure 3

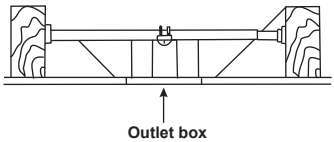

Figure 4

5. HANGING THE FAN

REMEMBER to turn off the power. Follow the steps below to hang your fan properly.

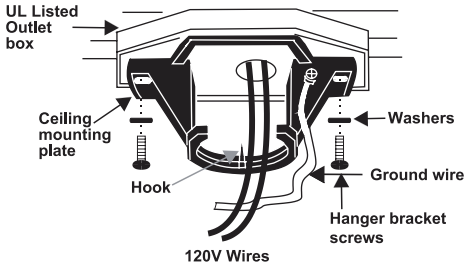

Figure 5

STANDARD CEILING INSTALLATION

Step 1. Pass the 120-volt supply wires through the center hole in the ceiling hanger bracket as shown in Fig. 5.

Step 2. Secure the hanger bracket to the ceiling outlet box with the screws and washers included with mounting hardware (Fig.5).

Step 3. Remove the hanger pin, lock pin and set screws from the top of the motor assembly.

Step 4. Route wires exiting from the top of the fan motor through the canopy, coupling cover and then through the ball/downrod. (Fig. 6)

Step 5. Align the holes at the bottom of the downrod with the holes in the collar on top of the motor housing. Carefully insert the hitch pin through the holes in the collar and downrod. Be careful not to jam the pin against the wiring inside the downrod. Insert the locking pin through the hole near the end of the hitch pin until it snaps into its locked position. (Fig. 6)

Step 6. Tighten two set screws on top of the fan motor firmly.

Step 7. Place the downrod ball into the hanger bracket socket. This will allow you to make the electrical connections. (Fig. 7)

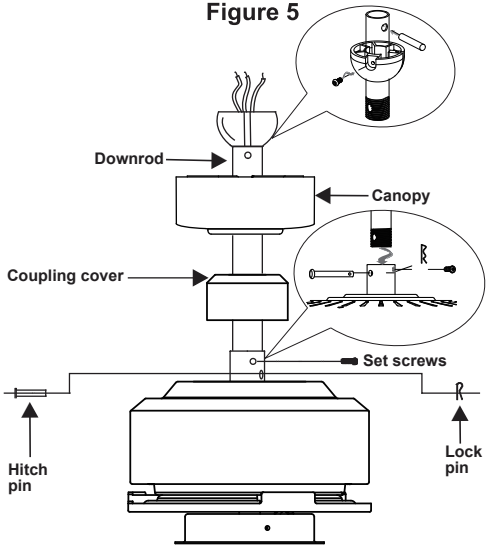

Figure 6

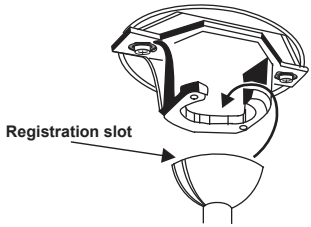

Figure 7

MAKING ELECTRICAL CONNECTIONS

BEFORE YOU BEGIN, TURN OFF THE ELECTRICITY.
Follow the steps below to connect the fan to your household wiring. Use the wire connecting nuts supplied with your fan. (Fig.11)

WARNING: TO REDUCE THE RISK OF FIRE, ELECTRIC SHOCK, OR OTHER PERSONAL INJURY. MOUNT FAN ONLY ON AN OUTLET BOX OR SUPPORTING SYSTEM MARKED ACCEPTABLE FOR FAN SUPPORT.

⚠ WARNING

DO NOT USE THIS DC MOTOR FAN IN CONJUNCTION WITH ANY VARIABLE (RHEOSTAT) WALL CONTROL OR REMOTE CONTROL.

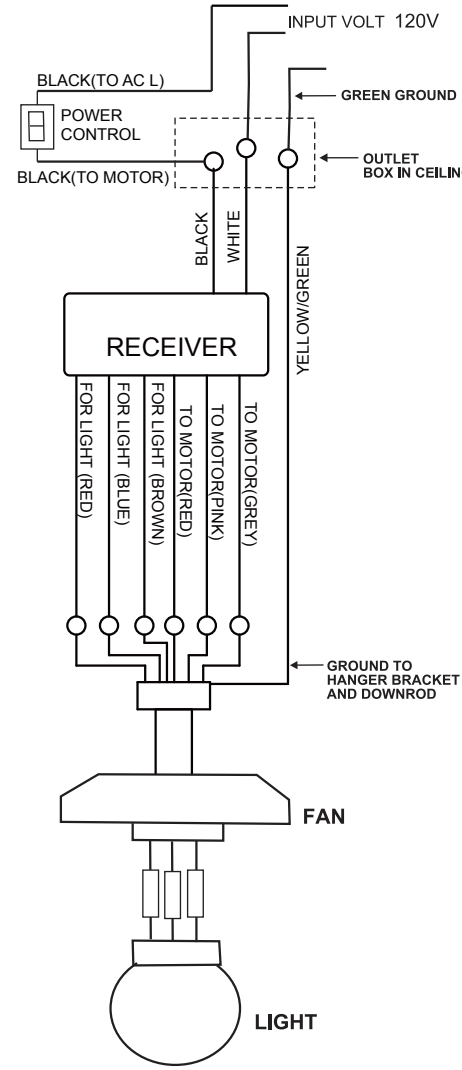

Fig. 11

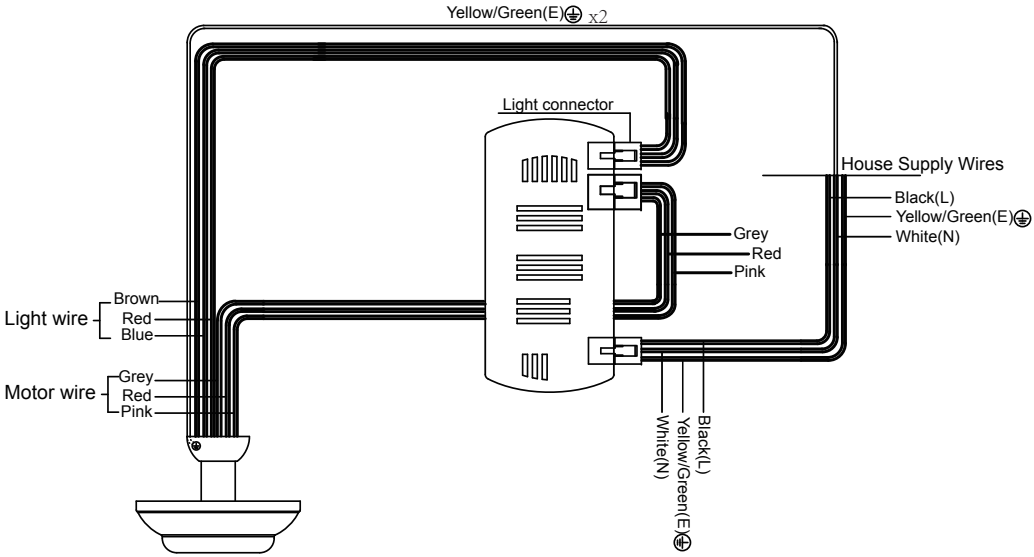

7. Canopy Assembly

After connecting the wires,
place the DC fan driver in hanger bracket as shown, turn the leads upward and separate wire connections and put neatly inside of the outlet box.

Locate the two screws on the underside of the hanger bracket.
Attach the canopy to the hanger bracket by placing the screws into the slot in the canopy, then twist clockwise to lock it into place, and tighten the screws firmly.
Twist clockwise the canopy cover to the canopy.

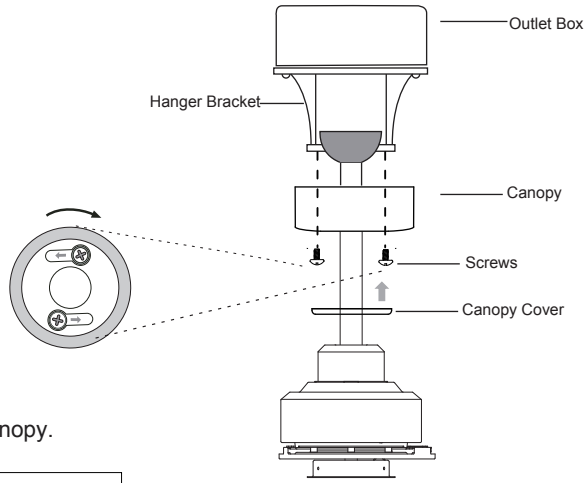

Figure 12

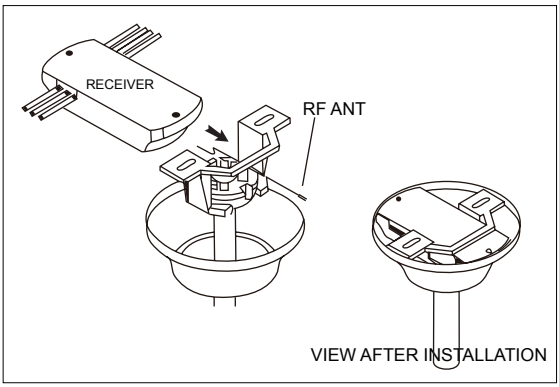

8. FAN BLADES ASSEMBLEY INSTALLATION

Remove rubber motor stoppers before attaching fan blade brackets.

Step 1. Fasten each blade to motor by using three screws.

Tighten screws securely, do not overtighten.

CAUTION-
TO REDUCE THE RISK OF PERSONAL INJURY, DO NOT BEND THE BLADE BRACKETS WHEN INSTALLATION.
WHEN BALANCING THE BLADES, OR CLEANING THE FAN, DO NOT INSERT FOREIGN OBJECTS IN BETWEEN ROTATING FAN BLADES.

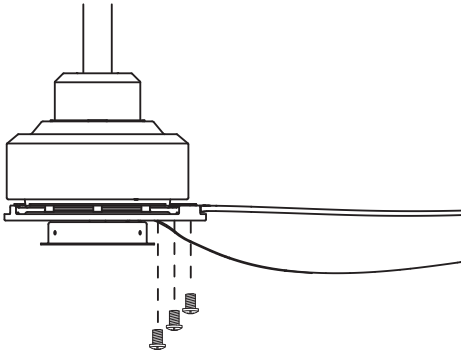

Figure 13

9. INSTALL LIGHT KIT

Step 1 - Connect the male plug on fitter plate to female plug in light kit. (Fig.14)
Install the light kit by aligning with the fitter plate and twist in. Install the shade by aligning with the light kit and twist in. (Fig. 15)

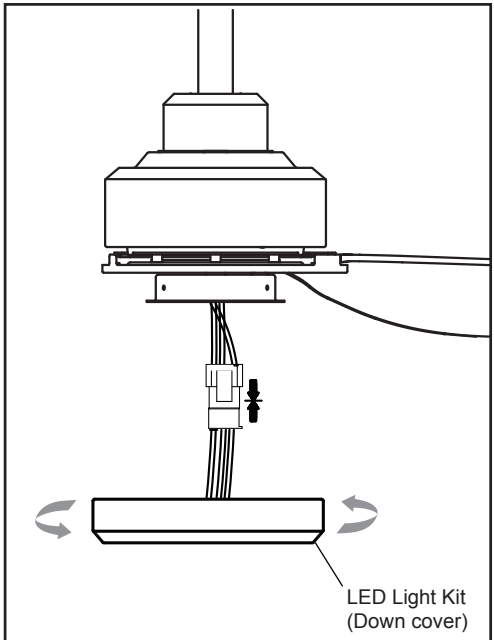

Figure 14

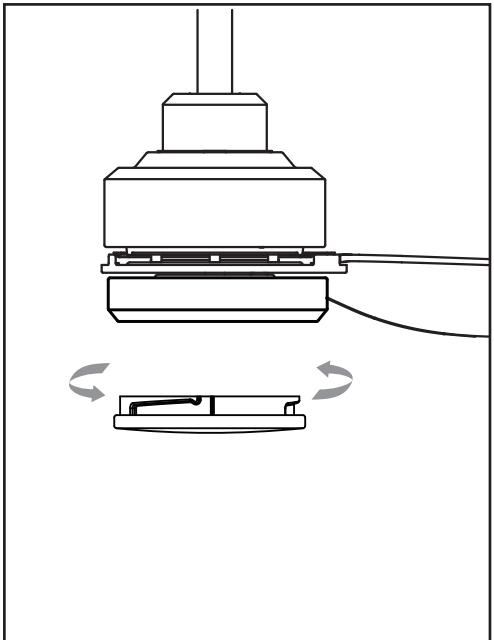

Figure 15

10. OPERATING YOUR FAN

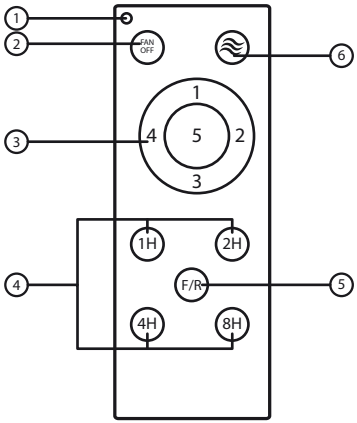

1. LED Indicator Light
2. Turns fan OFF
3. Fan Speed & ON:
   - 1 Lowest Speed
   - 2 Low Speed
   - 3 Medium Speed
   - 4 High Speed
   - 5 Highest Speed
4. Timer:
   - 1H - Fan turns off after 1 Hour
   - 2H - Fan turns off after 2 Hours
   - 4H - Fan turns off after 4 Hours
   - 8H - Fan turns off after 8 Hours
5. Forward / Reverse
6. Natural Breeze

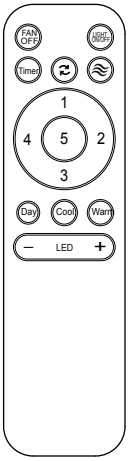

1 - Lowest speed
2 - Low speed
3 - Medium speed
4 - High speed
5 - Hightest speed
FAN OFF - FAN OFF
Light ON / OFF
- Forward / Reverse
Day - Turn the Day light on
Cool - Turn the Cool light on
Warm - Turn the Warm light on
LED - - Light dimmer -
LED + - Light dimmer +
Timer - Fan & Light off after 1~8 hours
- Natural Breeze

Warm Weather (Forward) - A downward airflow creates a cooling effect as shown in Fig. 18. This allows you to set your air conditioner on a warmer setting without affecting your comfort.

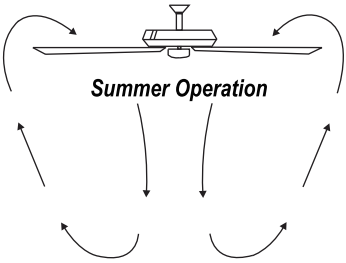

Figure 18

Cool Weather (Reverse)- An upward airflow moves warm air off the ceiling area as shown in Fig. 19. This allows you to set your heating unit on a cooler setting without affecting your comfort.

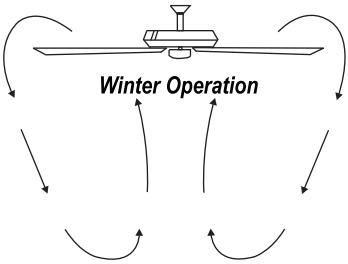

Figure 19

FCC STATEMENT

1. This device complies with Part 15 of the FCC Rules. Operation is subject to the following two conditions:

(1) This device may not cause harmful interference, and

(2) This device must accept any interference received, including interference that may cause undesired operation.

2. Changes or modifications not expressly approved by the party responsible for compliance could void the user's authority to operate the equipment.

NOTE: This equipment has been tested and found to comply with the limits for a Class B digital device, pursuant to Part 15 of the FCC Rules. These limits are designed to provide reasonable protection against harmful interference in a residential installation.

This equipment generates uses and can radiate radio frequency energy and, if not installed and used in accordance with the instructions, may cause harmful interference to radio communications. However, there is no guarantee that interference will not occur in a particular installation. If this equipment does cause harmful interference to radio or television reception, which can be determined by turning the equipment off and on, the user is encouraged to try to correct the interference by one or more of the following measures:

Reorient or relocate the receiving antenna.

Increase the separation between the equipment and receiver.

Connect the equipment into an outlet on a circuit different from that to which the receiver is connected.

Consult the dealer or an experienced radio/TV technician for help.

11. CARE OF YOUR FAN

Here are some suggestions to help you maintain your fan

1. Because of the fan's natural movement, some connections may become loose. Check the support connections, brackets, and blade attachments twice a year. Make sure they are secure. (It is not necessary to remove fan from ceiling.)

2. Clean your fan periodically to help maintain its new appearance over the years. Use only a soft brush or lint-free cloth to avoid scratching the finish. The plating is sealed with a lacquer to minimize discoloration or tarnishing. Do not use water when cleaning. This could damage the motor, or the wood, or possibly cause an electrical shock.

3. You can apply a light coat of furniture polish to the wood blades for additional protection and enhanced beauty. Cover small scratches with a light application of shoe polish.

4. There is no need to oil your fan. The motor has permanently lubricated bearings.

IMPORTANT: MAKE SURE THE POWER IS OFF AT THE ELECTRICAL PANEL BOX BEFORE YOU ATTEMPT ANY REPAIRS. REFER TO THE SECTION "MAKING ELECTRICAL CONNECTIONS".

12. TROUBLESHOOTING

Problem	Solution
Fan will not start.	1. Check circuit fuses or breakers.
	2. Check line wire connections to the fan and switch wire connections in the switch housing. **CAUTION:** Make sure main power is off.
Fan sounds noisy.	1. Make sure all motor housing screws are snug.
	2. Make sure the screws that attach the fan blade bracket to the motor hub is tight.
	3. Make sure wire nut connections are not rubbing against each other or the interior wall of the switch housing. **CAUTION:** Make sure main power is off.
	4. Allow a 24-hour "breaking-in" period. Most noise associated with a new fan disappear during this time.
	5. If using an optional light kit, make sure the screws securing the glassware are tight. Check that light bulb is also secure.
	6. Some fan motors are sensitive to signals from solid-state variable speed controls. If you have installed this type of control, choose and install another type of control.
	7. Make sure the upper canopy is a short distance from the ceiling. It should not touch the ceiling.