SOAIY®

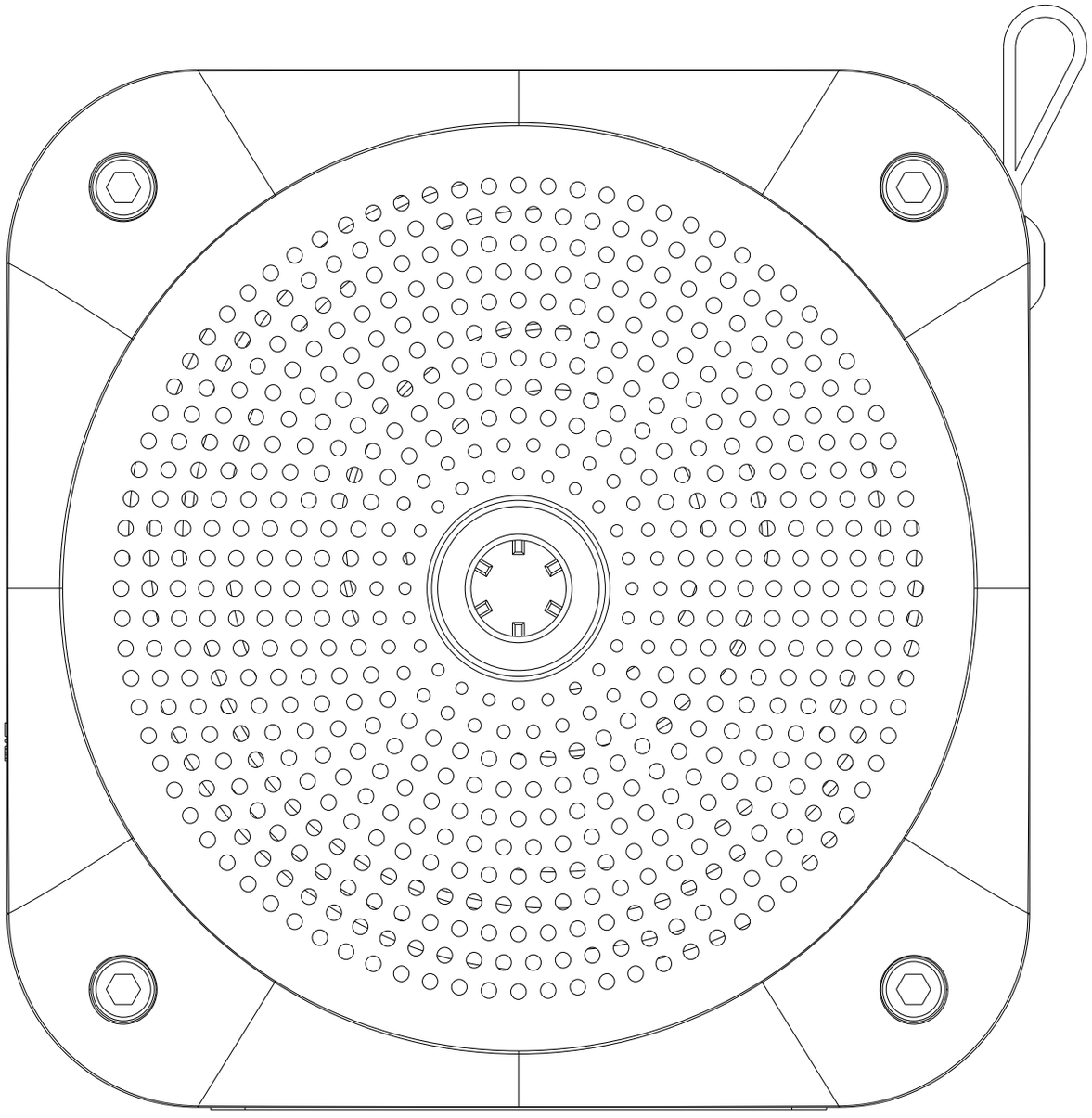

Bluetooth Speaker

User Guide **X3**

Power ON/OFF Operation

Charging the speaker before first use is recommended.

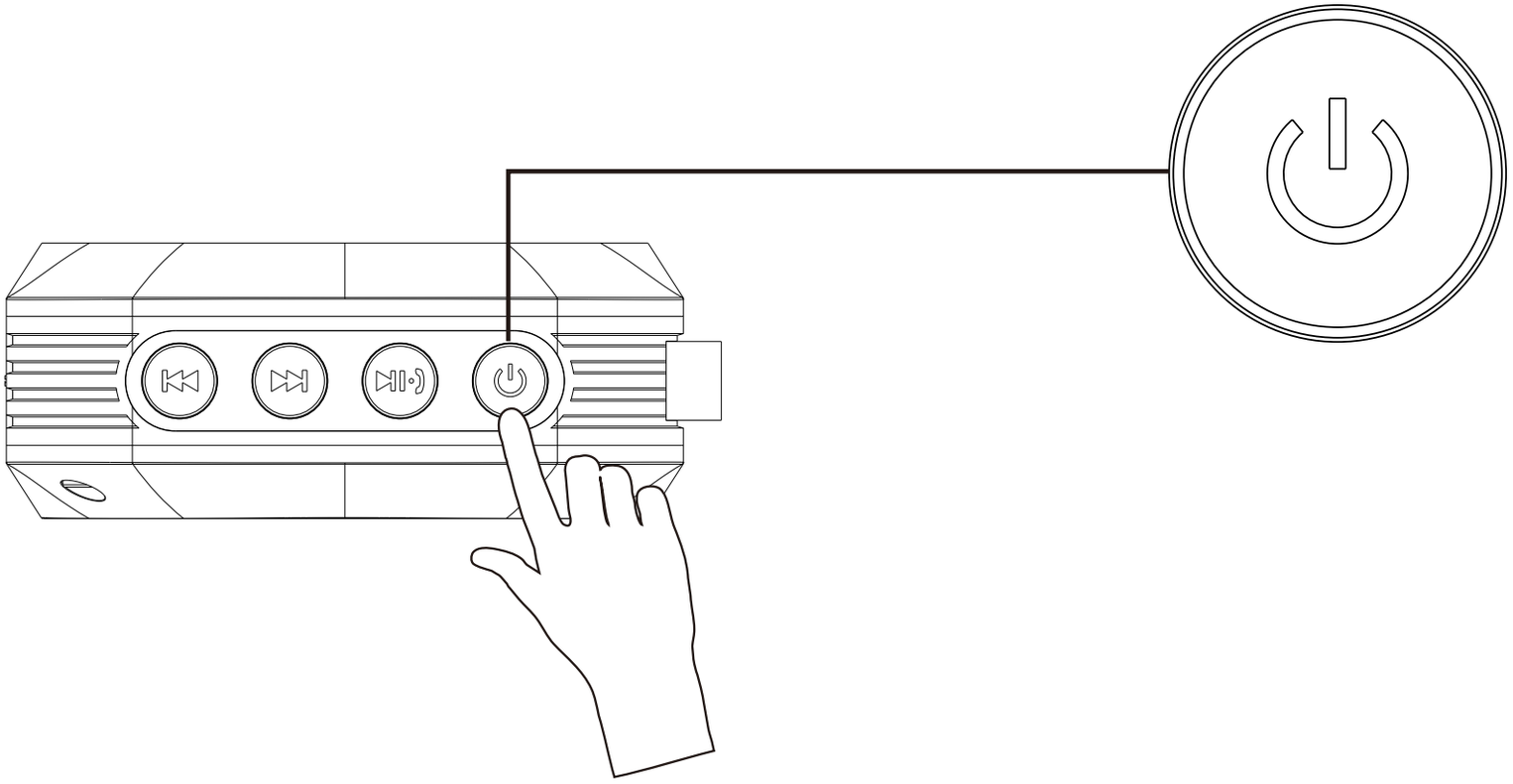

Hold power button down for (3) seconds to turn on / off the device. There will be sound effects when you turn on / off the speaker.

The speaker powers off after 5 minutes of inactivity.

Bluetooth Connection Operation

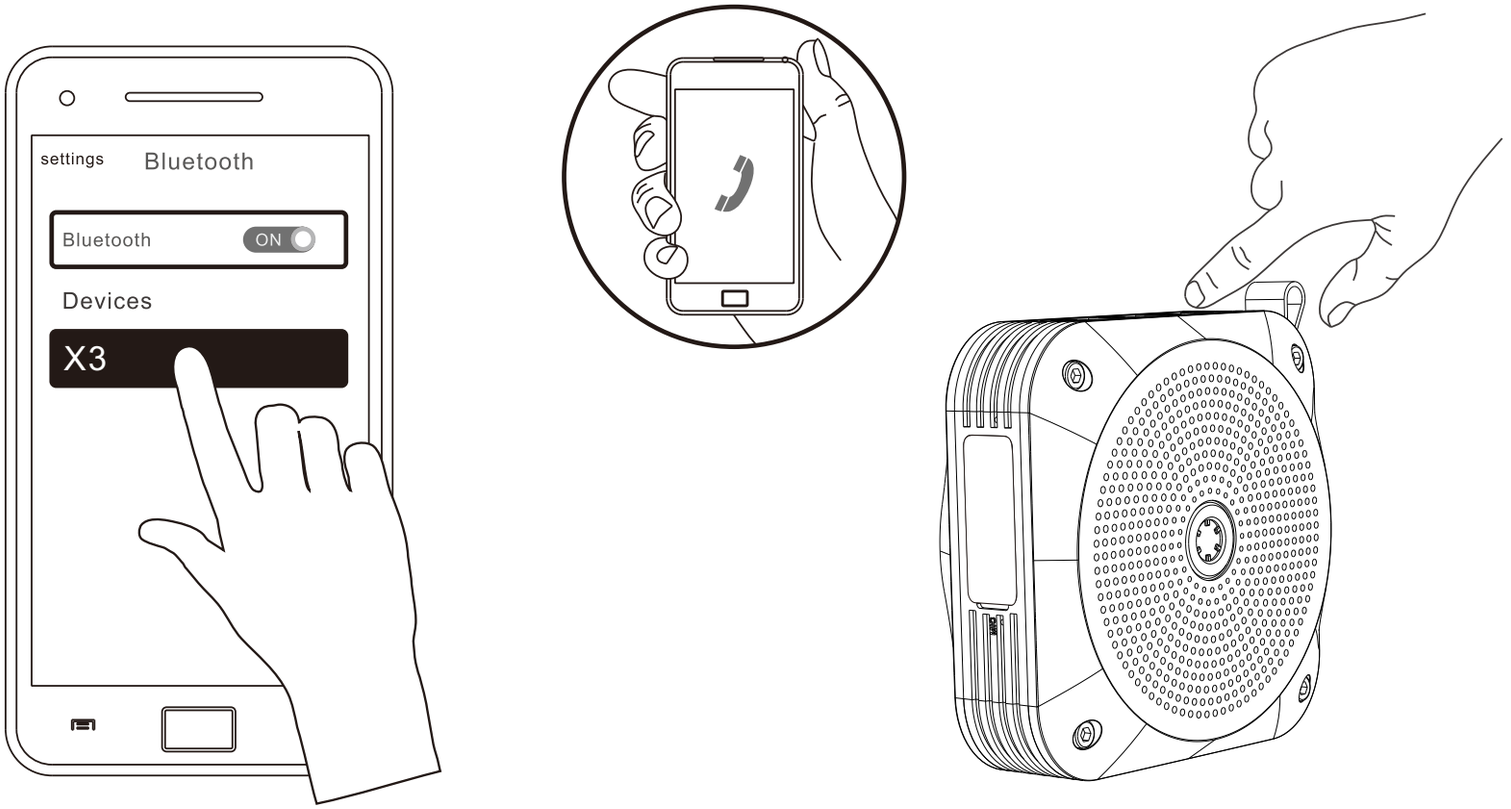

Open and enable Bluetooth on your device. (phone, tablet...)

Look for "X3" and select it on your phone / tablet screen.

Wait for Bluetooth to connect and listen to the successful pairing prompt.

Bluetooth will auto connect when turned on if previous established connection was not overridden by a different device.

Keys Function Operation

Button Operation:

Quick Press: It refers to a quick depress of the button, do not hold.

Holding: Hold the button down for specified amount of time.

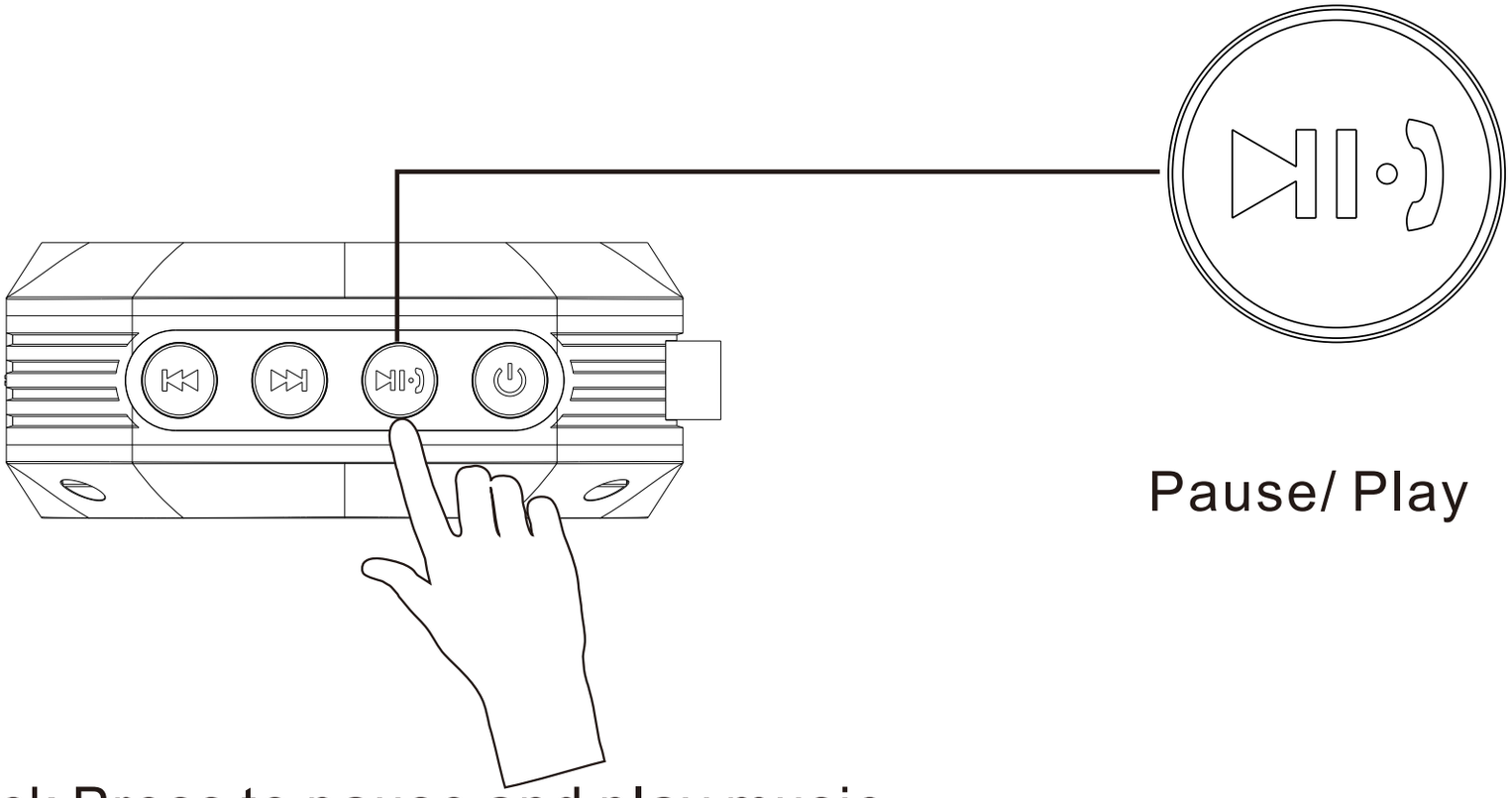

Quick Press to pause and play music.

Press and hold it to disconnect Bluetooth Connection.

When a call comes in: 1 .Quick Press to answer call.
2 .Quick Press again to end call.
3 .Quick Press twice to reject call.

Quick Press twice to redial last phone number.

Keys Function Operation

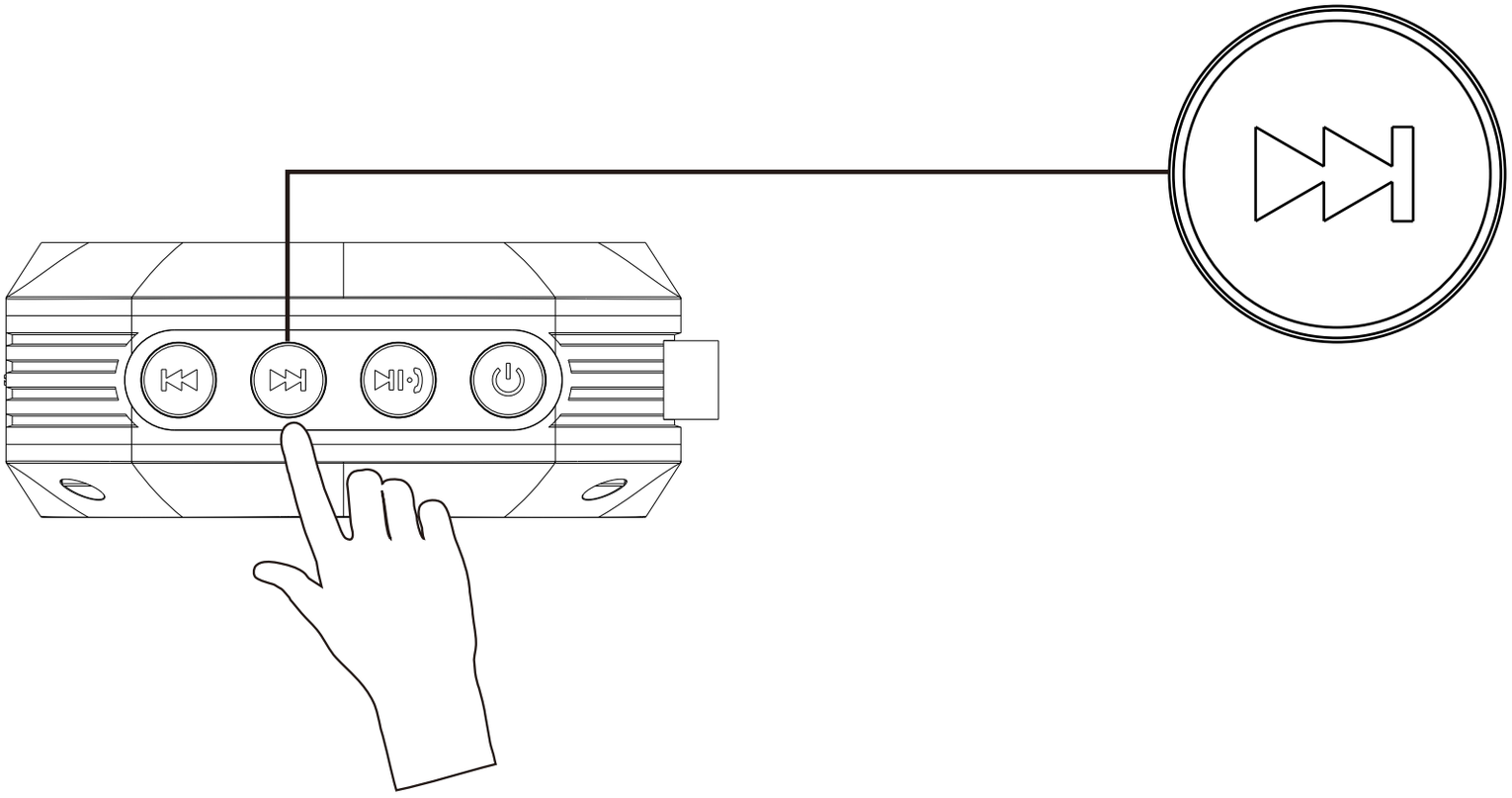

Quick Press to switch to next track.(Available only in Bluetooth)

Press and hold it to turn up the volume.

Keys Function Operation

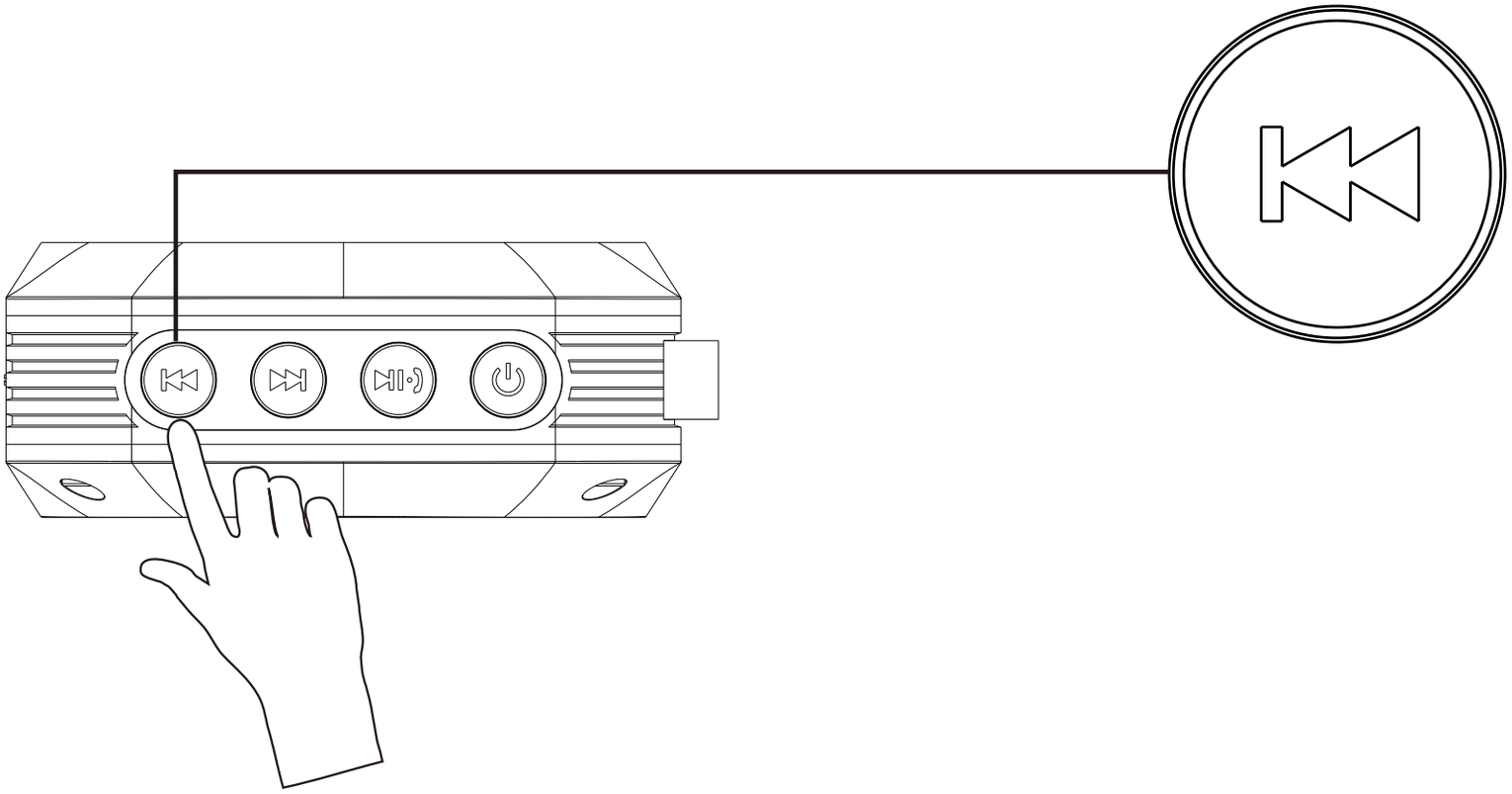

Press to switch to previous track or beginning of the track.
(Available only in Bluetooth)
Press and hold it to turn down the volume.

LED Indicator Light:

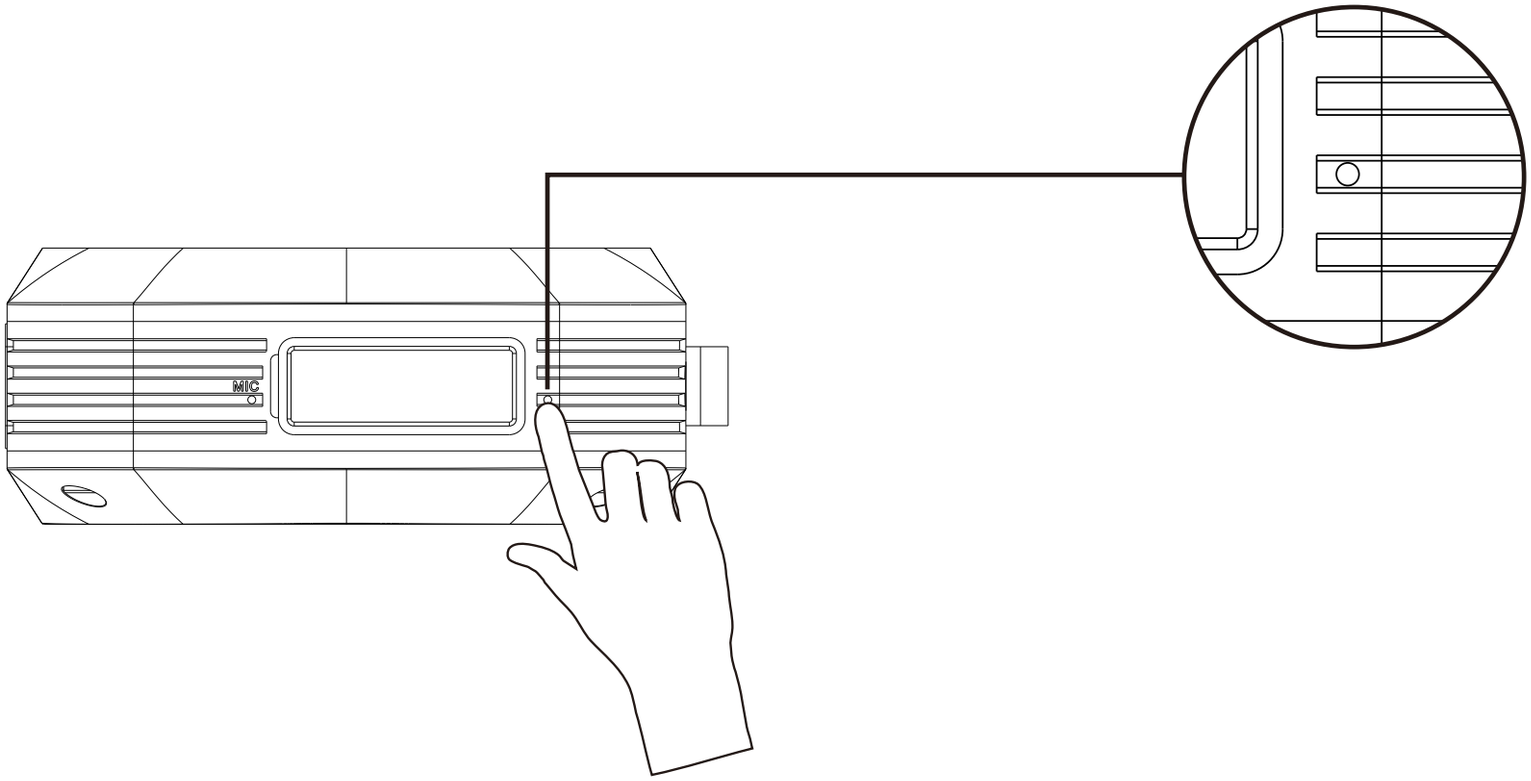

RED	(Flashing):	Charging
RED	(Solid):	Fully Charged
BLUE/RED	(Flashing):	Ready to Pair / Pairing
BLUE	(Solid):	Bluetooth / AUX mode

Microphone Hole

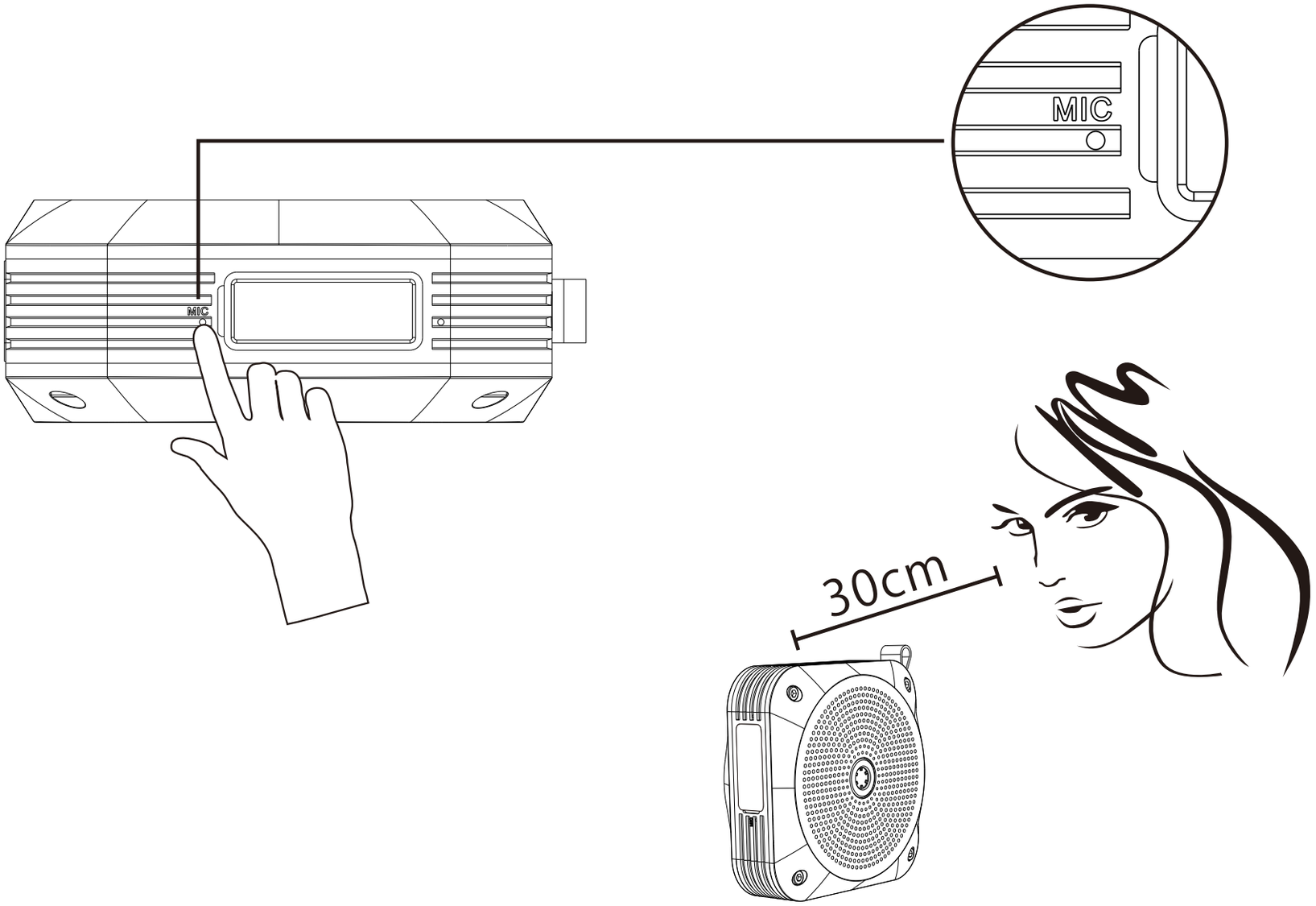

For better sound quality, please keep the device no more than 30cm away from you.

Calling from the same room may cause interference in sound quality.

Side Interface Diagram

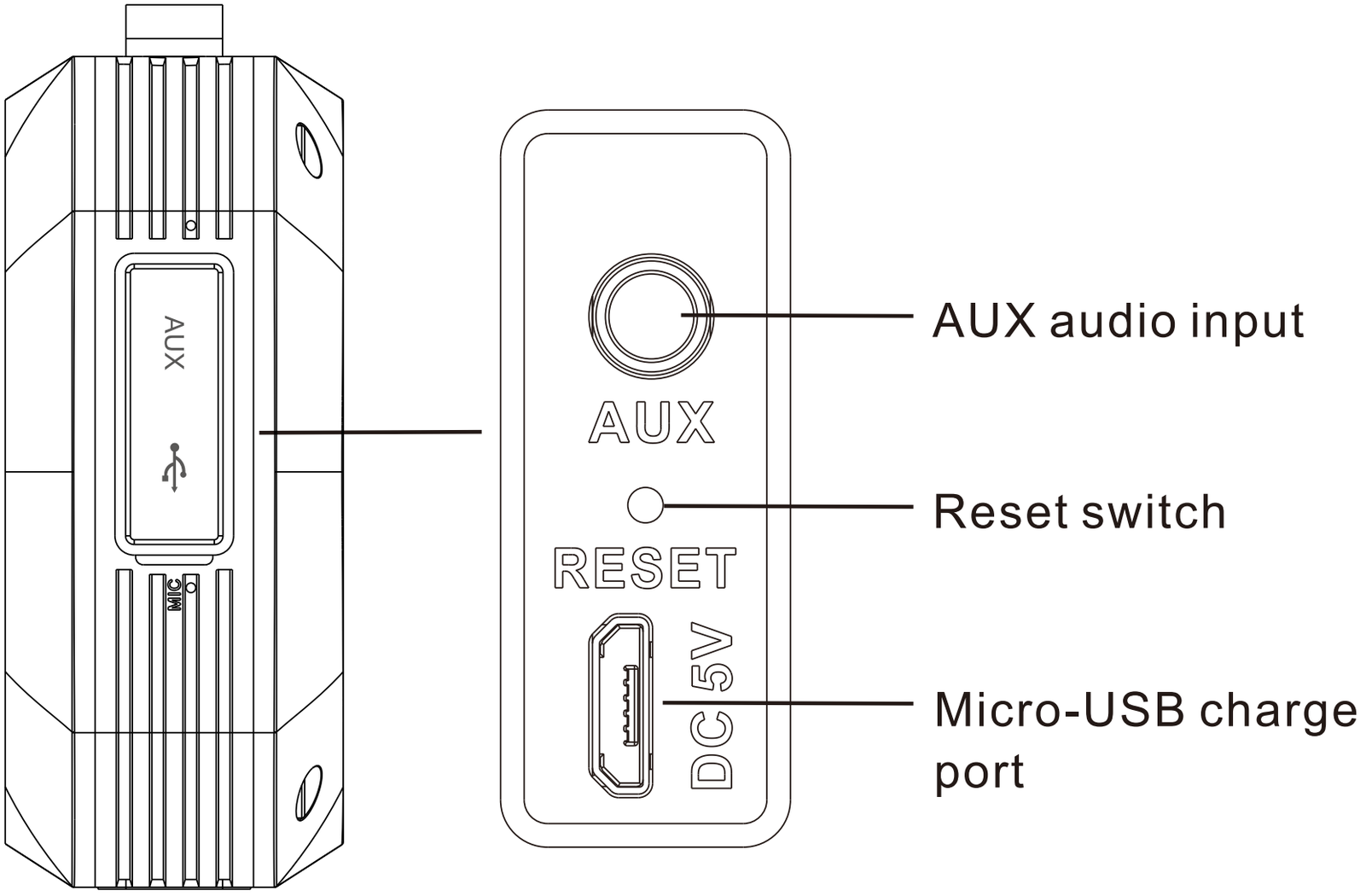

AUX IN

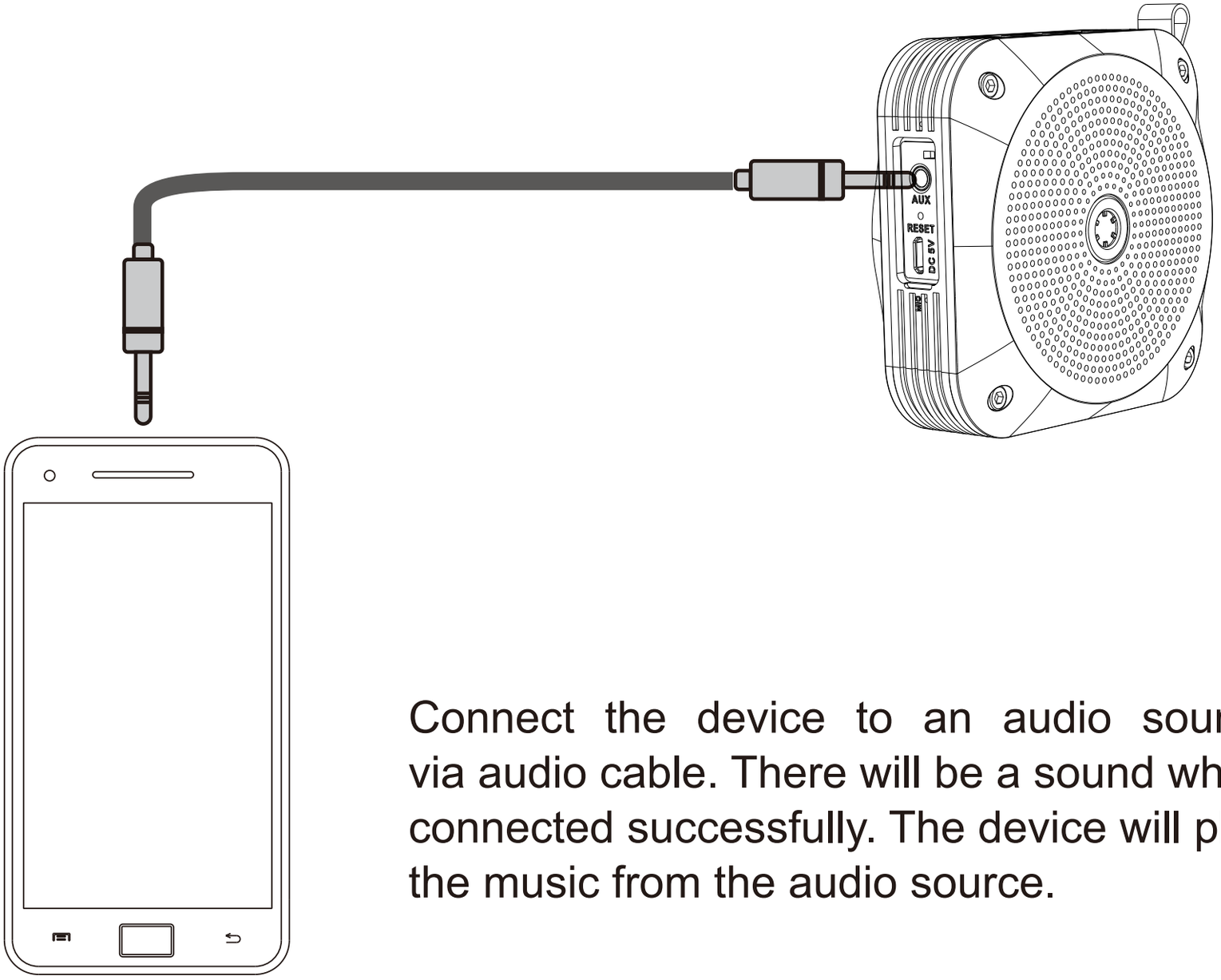

Connect the device to an audio source via audio cable. There will be a sound when connected successfully. The device will play the music from the audio source.

Reset Switch

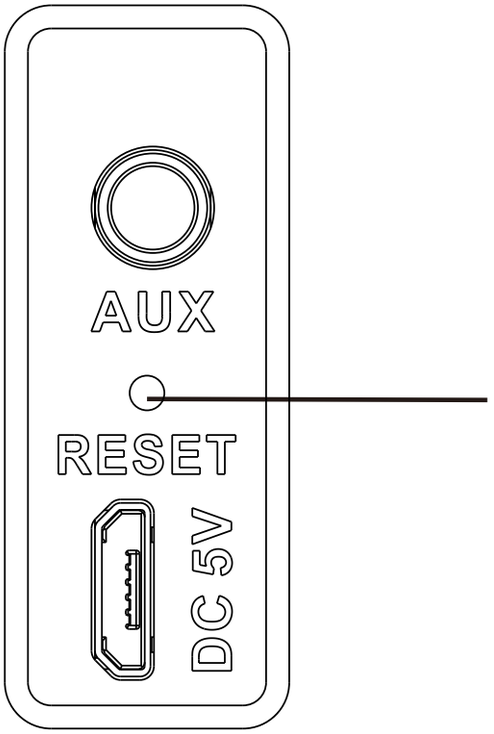

Press the reset switch with the help of a paper clip to reset the device.

USB Interface

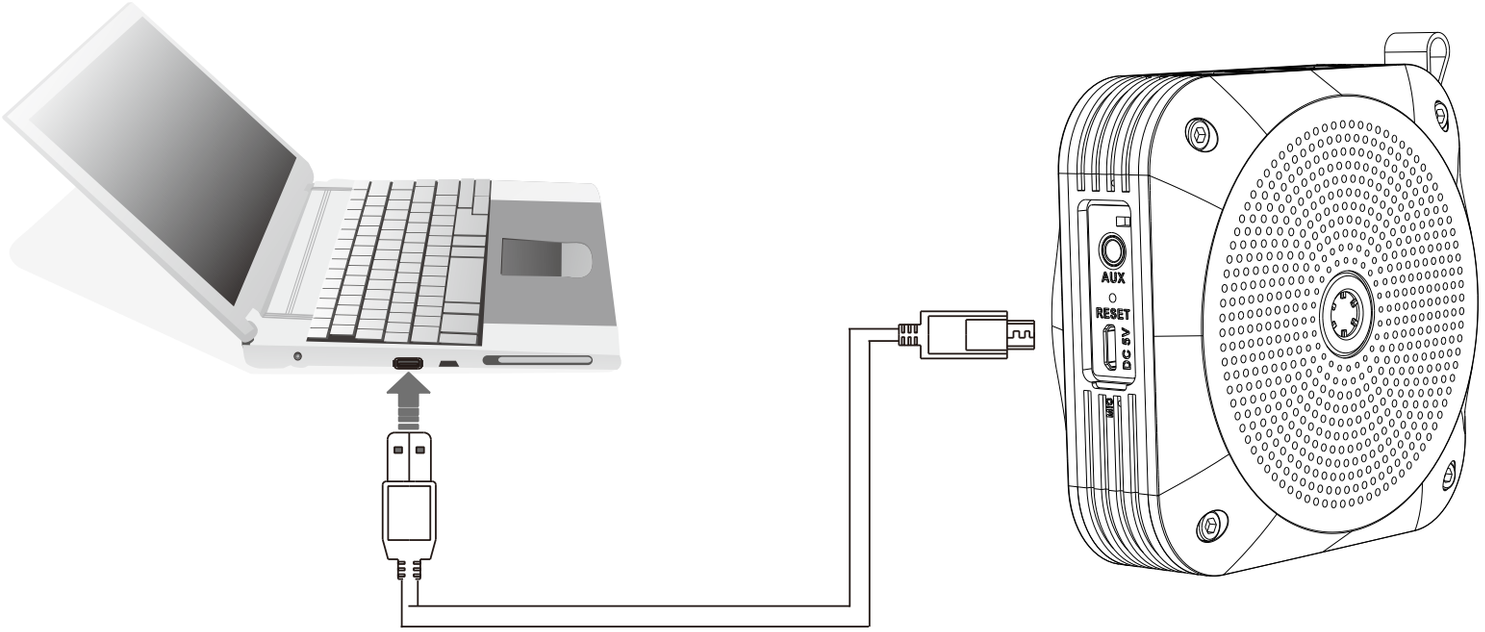

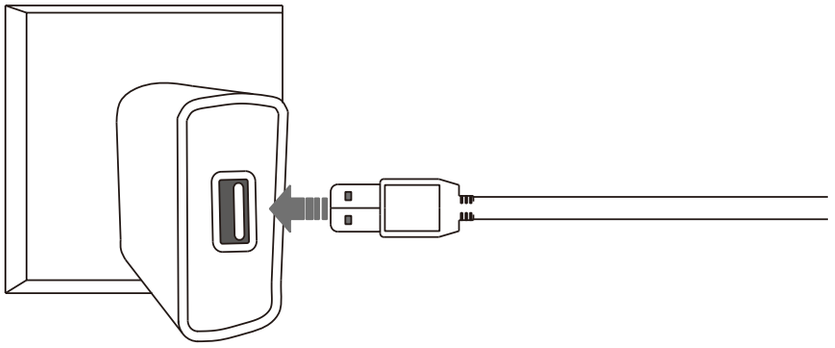

The device can be charged when it is connected with DC-5V 1A charger via USB cable.

Charging is possible through: Computer, Power Bank, Car Charger, Wall plug.

Charging through PC's USB port is generally the slowest method.

Package Contents

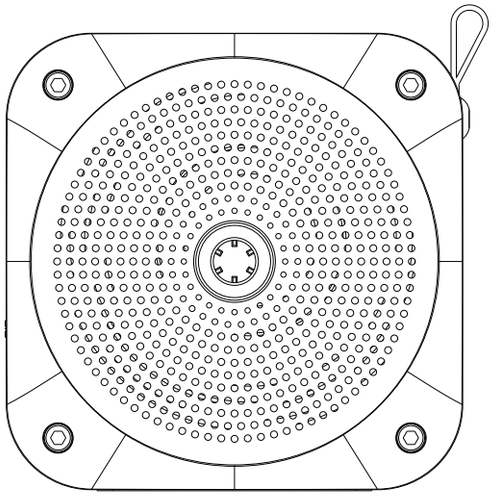

X3

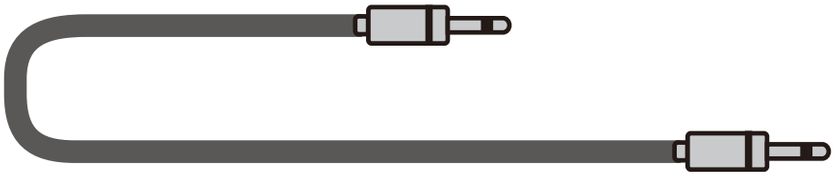

3.5mm Audio Cable

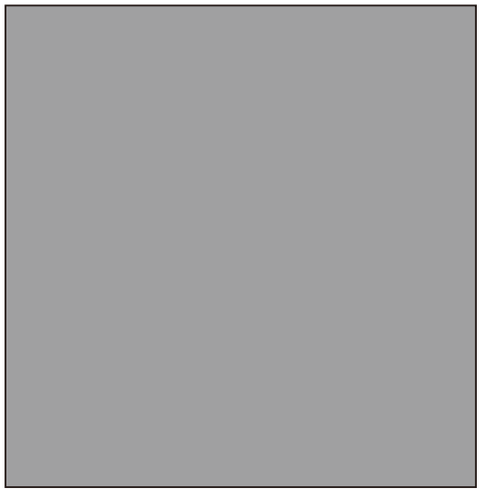

User Guide

Micro-USB to USB Charge Cable

Technical Data

Bluetooth Version	2.1+EDR	Frequency response	80Hz to 18KHz
Output power	4.5W	Maximum SPL	86dB
Impedance	4Ω	Net weight	195g
Dimension	L86*W34.5*H86mm	Charging time	2~3 hours
Battery	Li-ion battery 3.7V 1200mAh	Play time	7 hours (default volume)

Important Safety Instructions

- Study this user guide carefully before using this speaker

- Keep speaker away from high temperatures. Do not leave it in the sun
(Heat degrades battery life span) Keep away from open flames

- Do not expose speaker to liquids or moisture

- Refrain from destroying, modifying, dropping, or throwing speaker

- Always check for power compatibility before charging

- Loud music may impact hearing loss

- Disassembling the speaker will void warranty for speaker

- At the end of the speaker's lifecycle and warranty period, properly discard speaker according to state law

- Do not store speaker for over a month without usage. We suggest charging the battery from low power to full once a month to preserve battery life

FCC Caution:
This device complies with part 15 of the FCC Rules. Operation is subject to the condition that this device does not cause harmful interference (1) this device may not cause harmful interference, and (2) this device must accept any interference received, including interference that may cause undesired operation.
Changes or modifications not expressly approved by the party responsible for compliance could void the user's authority to operate the equipment.
NOTE: This equipment has been tested and found to comply with the limits for a Class B digital device, pursuant to Part 15 of the FCC Rules. These limits are designed to provide reasonable protection against harmful interference in a residential installation. This equipment generates, uses and can radiate radio frequency energy and, if not installed and used in accordance with the instructions, may cause harmful interference to radio communications. However, there is no guarantee that interference will not occur in a particular installation.
If this equipment does cause harmful interference to radio or television reception,
which can be determined by turning the equipment off and on, the user is encouraged to try to correct the interference by one or more of the following measures:
-- Reorient or relocate the receiving antenna.
-- Increase the separation between the equipment and receiver.
-- Connect the equipment into an outlet on a circuit different
from that to which the receiver is connected.
-- Consult the dealer or an experienced radio/TV technician for help.
The device has been evaluated to meet general RF exposure requirement. Th e device can be used in portable exposure condition without restriction.
FCC ID: 2AECY-X3

Supervised by GuangzhouSoaiy Digital Technology Co.,Ltd
Manufactured by Shenzhen Soaiy Technology Co.,Ltd

ADD:2&4/F,Bldg D,Fuxinlin Industrial park,Hangcheng Industrial Zone,Xixiang Street,Bao’an District,Shenzhen,China
Website:www.soaiyaudio.com
Email:sales@soaiyaudio.com