MANUAL

SEPR-1

Stand-Alone Proximity Reader

Senseon

Introduction:

The SEPR-1 Stand-Alone Proximity Reader provides a flexible solution for securing controlled access. The stylish case and small size make it ideal for use in most residential, commercial, and industrial sites. The wave-shaped LED status bar accents the case design. Simple installation, quick programming, high reliability, and great looks are all combined in the .

Specifications:

Power Input	12VDC
Current Draw	Standby: 80mA @ 12VDC Active: 200mA @
12VDC	
Max. Read Distance	6" (15cm)
User Card Limit	100 cards
Master Card Limit	5 cards
Transmit Frequency	125Khz
Outputs	1 relay (Com, N.O., N.C.)
Contact Rating	1A @ 30V
Relay Time Delay	1~180 secs. / Toggle mode
Temperature	-4°~158°F (-20°~70°C)
Enclosure Rating	IP67
Dimensions	$3^3/_4$" x $1^3/_4$" x $^3/_4$" (95 x 44 x 19 mm)

Parts List:

1 x SEPR-1 Proximity Reader
1 x Installation and Operation Manual

Additional access cards are available. Please contact Granding sales for ID cards.

Features:

- Stand-Alone Proximity Card Reader.
- Use in small businesses, homes, parking structures, apartments, and other locations.
- Sealed and weatherproof (IP67). Mounts easily to interior and exterior walls.
- Attractive tri-color wave-shaped LED status bar indicates proximity reader's mode and status.
  Blue: On/Valid card indicator
  Green: Programming mode
  Red: Invalid card
- Output relay for either timed (1 to 180 seconds) or "Toggle" mode.
- Egress input to exit the protected area without using the proximity reader.
- Buzzer is programmable for audible confirmation or silent mode.
- Up to 100 user cards can be programmed.
- User cards easily deleted. Delete a single card, or all cards.
- Up to 5 "Master" cards can be programmed.
- 10 blank cards included.

Dimensions: (Actual size)

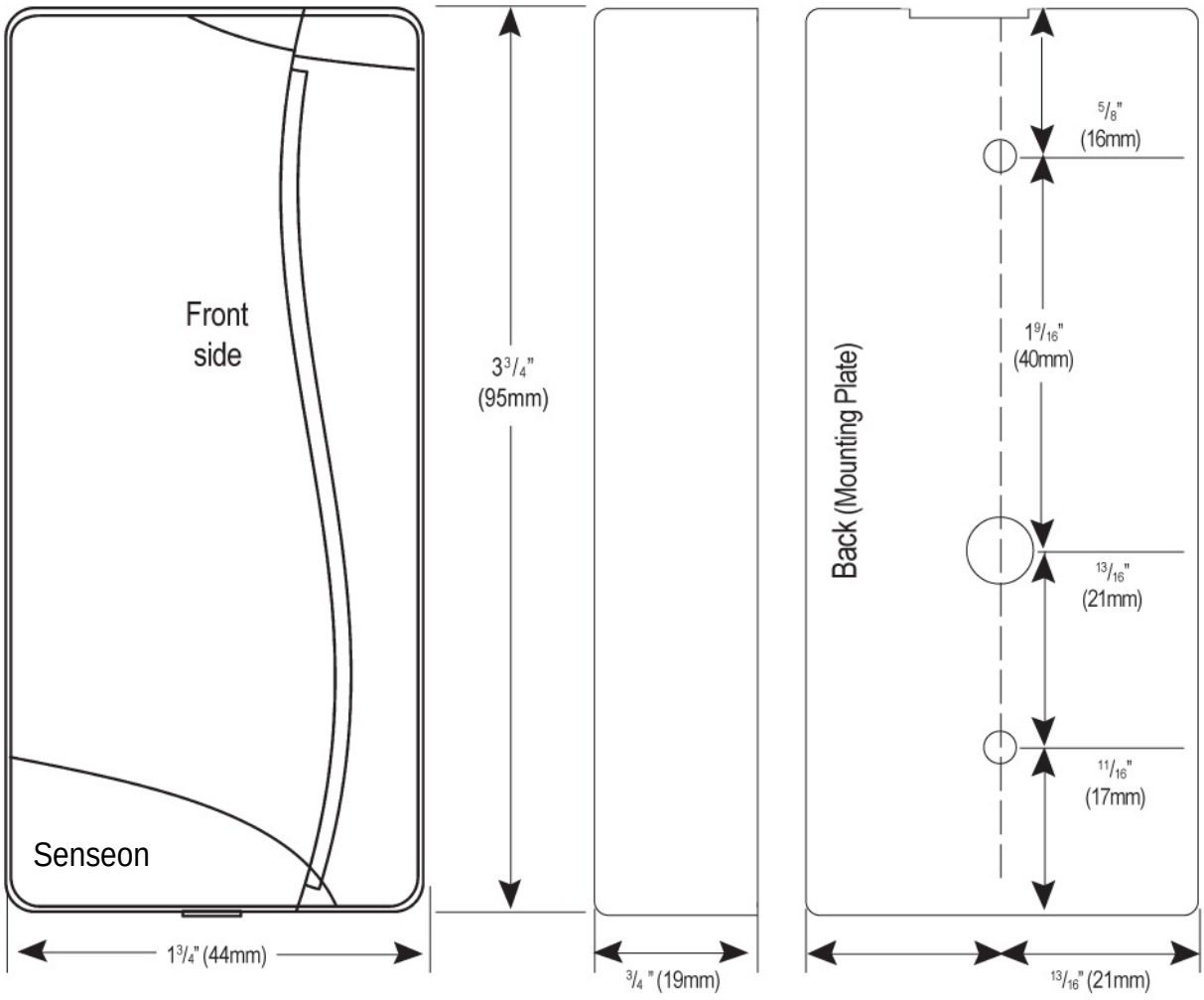

Installation Instructions:

1. Unpack the unit and familiarize yourself with the proximity reader and the included parts.
2. Read this manual from front to back. There is a lot of good information here.
3. Test the mounting location for fit.
4. Using a T-10 Torx driver, remove the screw from the bottom of the proximity reader and separate the outside case from the base.
5. Place the base on the mounting location, and then mark the two mounting holes and the wire harness hole.
6. Drill a 1/2" hole for the proximity reader's wire harness.
7. Permanently screw the base into the mounting location.
8. Run the wires from the power supply, egress button, and door unlock device through the hole to connect to the wire harness.
9. Connect the wires to the proximity reader's wire harness. Solder or crimp the connections, and carefully insulate them.
10. Reattach the outside case to the base.
11. The preliminary installation is done. Now program the proximity reader.

Wire Coding:

RED — (+) 12VDC
BLACK — (–) GND
BLUE — Egress Input
YELLOW — N.C. Output
GRAY — N.O. Output
BROWN — COM
GREEN — Unused
WHITE — Unused

Relay, 1A@30VDC

Sample Installation:

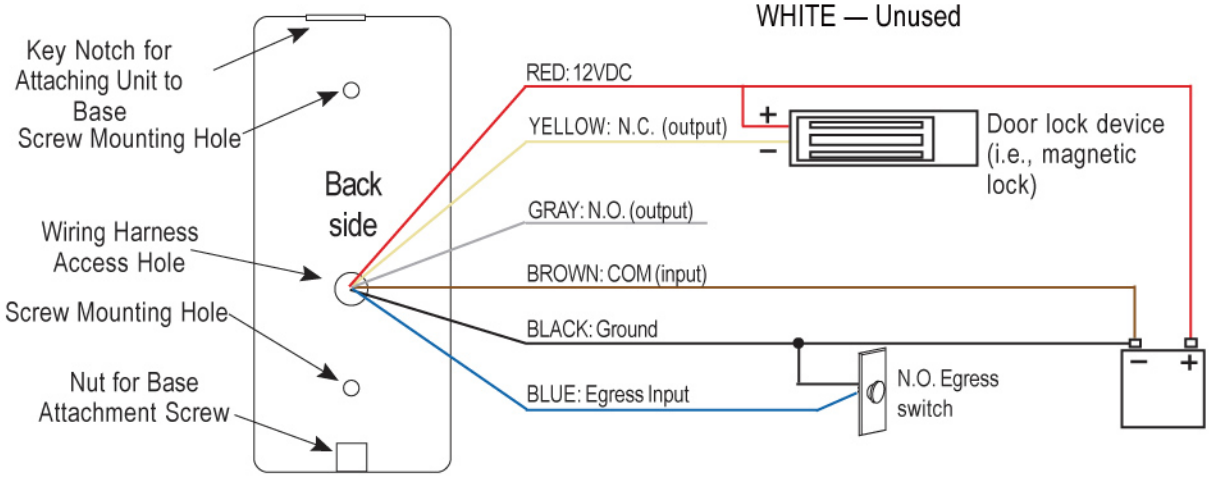

Mounting Diagram:

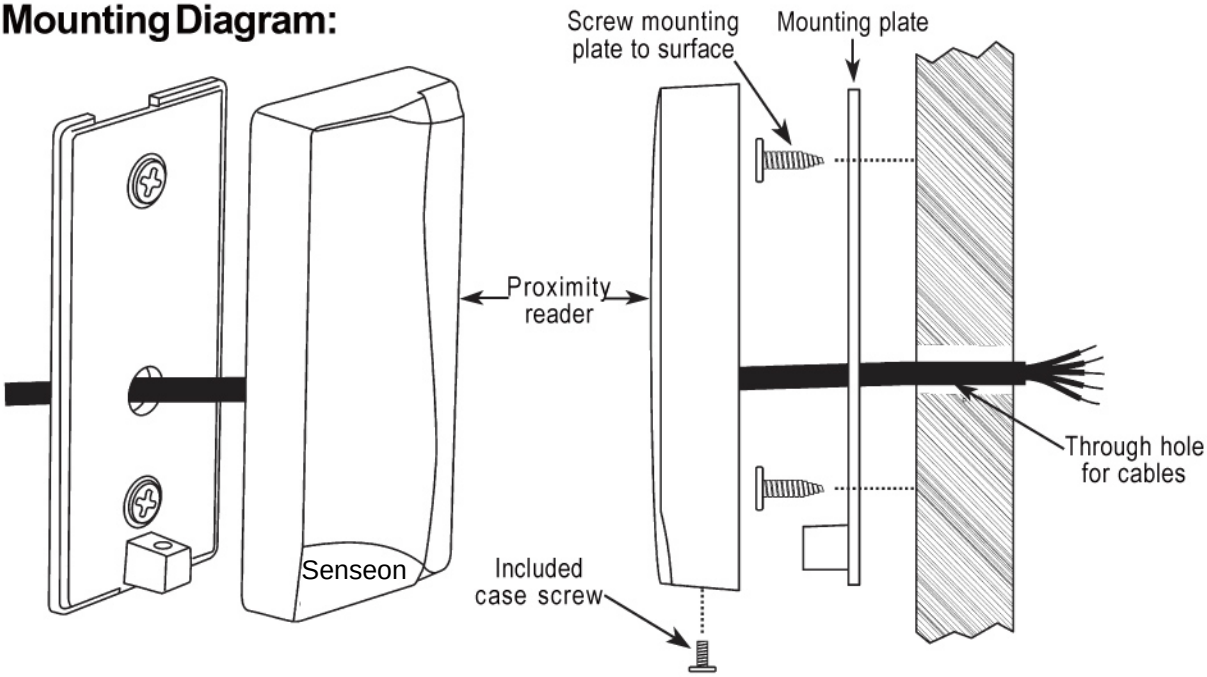

Getting Started:

Card Types:

There are three basic types of cards used by the proximity reader:

- Master Card (MC) – Used for programming only. It does not give access to the protected premises.
- User Card (UC) – Used for access only. Considered to be a valid card.
- Blank Card (BC) – A card that has not yet been programmed into the proximity reader. Considered to be an invalid card.

NOTE – The proximity reader can learn up to 5 master cards and 100 user cards.

LED Color Meanings:

LED Color	What it means
Blue	The proximity reader is powered on and in the standby mode
Green	The proximity reader is in the programming mode
Red	Indicates an error

First Time Power Up:

1. After connecting power the unit should beep once and the LED should be Blue - The proximity reader is ready to be programmed using the included master card marked with a red sticker.
2. If after connecting power for the first time the LED is flashing Green you must program your master card by tapping it to the reader.
3. This will be followed by 2 short beeps and the LED should turn Blue.
4. The proximity reader is ready to be programmed using the master card you just created.

Programming:

1. Add a new user card

Action	Reaction
Tap a master card 1 time	2 quick beeps, LED flashes green
Wait 3 seconds	1 beep, green flashes continue
Tap a blank card 1 time	1 beep, the card is now a user card
Tap more blank cards 1 time each to create more user cards	1 beep for each new user card
Exit – To exit programming mode, tap a master card 1 time or wait 15 seconds.	

NOTE – Attempting to add a previously-learned user card or master card will cause the unit to beep twice and the LED to flash red.

2. Delete the user card following this user card

Use this to delete a user card that was not returned by an employee

Action	Reaction
Tap a master card 2 times	2 quick beeps, 1 more beep, LED flashes green
Wait 3 seconds	2 beeps, green flashes continue
Tap the user card that was added just before the card to be deleted	2 quick beeps, the desired user card is deleted
Exit - To exit programming mode, tap a master card 1 time or wait 15 seconds.	

NOTE – Attempting to delete a blank card or a master card will cause the unit to beep twice and the LED to flash red.

3. Delete this user card

Use this to delete a user card that is in your possession

Action	Reaction
Tap a master card 3 times	2 quick beeps, 2 more beeps, LED flashes green
Wait 3 seconds	3 beeps, green flashes continue
Tap the user card to be deleted	3 quick beeps, the user card is deleted
Exit – To exit programming mode, tap a master card 1 time or wait 15 seconds.	

NOTE – Attempting to delete anything other than a user card will cause the unit to beep twice and the LED to flash red.

4. Delete all user cards

Action	Reaction
Tap a master card 4 times	2 quick beeps, 3 more beeps, LED flashes green
Wait 3 seconds	4 beeps, green flashes continue

WITHIN 3 SECONDS, tap the master card again	4 quick beeps, all user cards are deleted
The unit automatically exits to standby mode	

5. Add a new master card (Warning: master cards cannot be deleted)*

Action	Reaction
Tap a master card 5 times	2 quick beeps, 4 more beeps, LED flashes green
Wait 3 seconds	5 beeps, green flashes continue
Tap a blank card or a user card	2 beeps, the card is now a master card
Tap more blank or user cards 1 time each to create more master cards	2 beeps for each new master card
Exit – To exit programming mode, tap a master card 1 time or wait 15 seconds.	

6. Set the door release timer

Action	Reaction
Tap a master card 6 times	2 quick beeps, 5 more beeps, LED flashes green
Wait 3 seconds	6 beeps, green flashes continue
Count the beeps	1 beep = 1 second for the door release timer
Tap the master card to stop the beeps equal to the number of beeps	The timer is now set for the number of seconds
The unit automatically exits to standby mode	

7. Show me how many user cards have been programmed

Action	Reaction
Tap a master card 7 times	2 quick beeps, 6 more beeps
Wait 3 seconds	7 beeps, green flashes continue
Wait 1.5 seconds	Silence
Count beeps for the first digit	Long beep=0 or 1 beep=1
Wait 1 second	Silence
Count beeps for the second digit	Long beep=0 or 1-9 beeps
Wait 1 second	Silence
Count beeps for the third digit	Long beep=0 or 1-9 beeps
The unit automatically exits to standby mode	

Counting the beeps – The number of beeps indicates the value of each digit. All three digits together gives the number of user cards that have already been programmed. See the examples on page 8.

***See page 10, "System Reset," for instructions on clearing all cards from memory.**

Some examples:

Number of user cards	Beep sequence
13	Long beep / 1 short beep / 3 short beeps
24	Long beep / 2 short beeps /4 short beeps
7	Long beep / Long beep / 7 short beeps
100	1 short beep / Long beep / Long beep

8. Set the relay toggle mode (timed output or toggle)

Action	Reaction
Tap a master card 8 times	2 quick beeps, 7 more beeps
Wait 3 seconds	8 beeps, green flashes continue
Wait a second, and the mode changes automatically	Beeps 1 time = normal mode Beeps 2 times = latched mode
The unit automatically exits to standby mode	

Normal mode – Use a user card to unlock the door, the door automatically locks after the timer expires.

Toggle mode – Use a user card to unlock the door, and then use a user card to relock the door.

9. Not used, reserved for future use

10. Set the beeper mode (to beep or not when a user card is used)

Action	Reaction
Tap a master card 10 times	2 quick beeps, 9 more beeps
Wait 3 seconds	10 beeps, green flashes continue
Wait a second, and the mode changes automatically	Beeps 1 time = beeper off Beeps 2 times = beeper on
The unit automatically exits to standby mode	

NOTE – When the beeps are programmed off, the proximity reader will still beep during the programming mode.

Operating Instructions:

Entering the Premises – User Card

To enter a protected premise, tap the proximity reader one time with a user card. The LED turns off momentarily once, the proximity reader sounds one short beep, and the relay output engages for the programmed time.

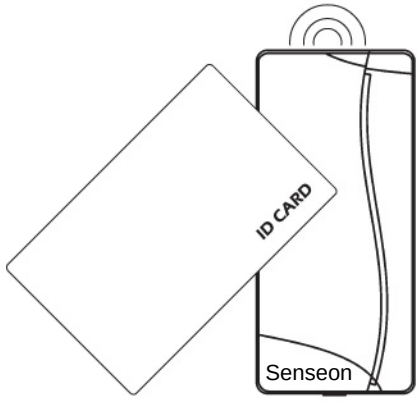

Exiting the Premises – Egress Button

To exit a protected premise, press the egress button once. The LED turns off momentarily once, the proximity reader sounds one short beep, and the relay output engages for the programmed time.

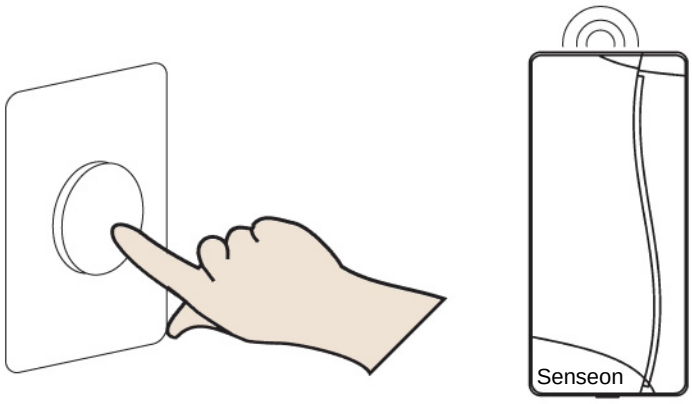

Accidently Using an Invalid Card

If the proximity reader is tapped using a blank card, the LED flashes RED once and the proximity reader sounds one long beep.

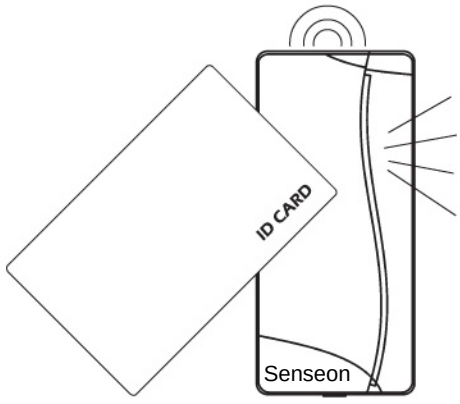

System Reset:

Should it be necessary to completely reset the proximity reader, follow this procedure:

1. Disconnect power to the proximity reader.
2. Ground the BLUE wire:
   2.1 If the egress button is connected, DO NOT open the case. Just press and hold the egress button.
   2.2 If the egress button is not connected, you must unscrew the proximity reader from the wall, and ground the BLUE wire.

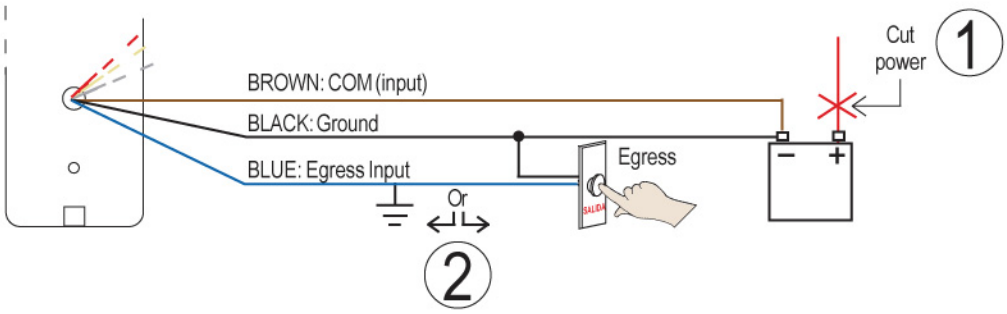

3. While either pressing the egress button or grounding the BLUE wire, reconnect power. The LED will start to blink GREEN. Continue pressing the egress button or grounding the BLUE wire.
4. After about 3 seconds, the proximity reader should sound two long beeps. At this point, release the egress button or unground the BLUE wire.

   NOTE: If a mistake is made, just restart this process from step 2 above.
5. After a few seconds, the proximity reader will sound 3 beeps and the LED will start flashing GREEN rapidly. After about 5 seconds, the LED will flash slower. At this point, tap any card to the proximity reader. This is now the first master card.

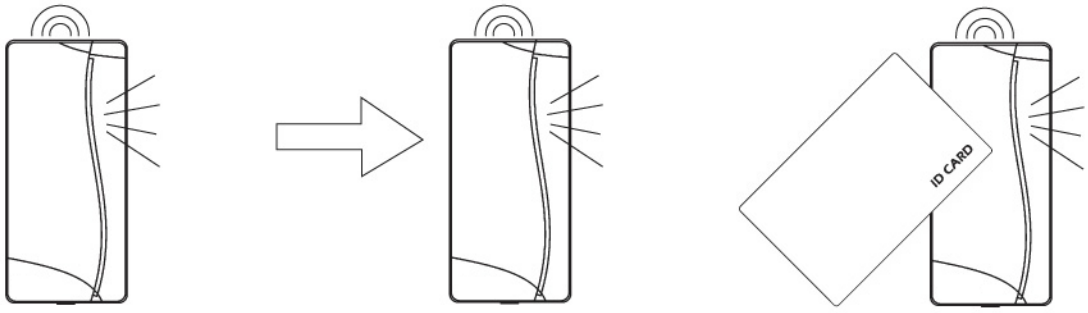

NOTE: After a system reset, all cards except the new master card are now considered to be blank cards.

Troubleshooting

The LED does not light:	• Check the power connection • Check the power supply
The relay does not activate	• Make sure you are using a valid user card • Make sure the relay is not in toggle mode • Make sure you are using the correct relay output (either N.O. or N.C.)
The relay time is too short	• Set the door release time longer
Egress button not working	• Make sure you are using a N.O. switch • Double-check the door release time • Double-check the relay toggle mode

OPERATION

Card Types

There are three basic types of cards used by the proximity reader:

Master Card (MC) – Used for programming only. It does not give access to the protected premises.

User Card (UC) – Used for access only. Considered to be a valid card.

Blank Card (BC) – A card that has not yet been programmed into the proximity reader. Considered to be an invalid card.

NOTE – The proximity reader can learn up to 5 master cards and 100 user cards.

LED Color Meanings

LED Color ..... What it means

Blue ..... The proximity reader is powered on and in the standby mode

Green ..... The proximity reader is in the programming mode

Red ..... Indicates an error

First-time Power On

When the proximity reader is turned on the first time, and no master card exists, it will prompt the user to add a master card by flashing the green light about two times per second until the first master card is tapped to the reader. To add a master card:

1. Tap any blank card to the proximity reader once.
2. The reader will beep once, and then the LED will flash green twice and then turn steady blue.
3. The proximity reader exits the Power-On mode.

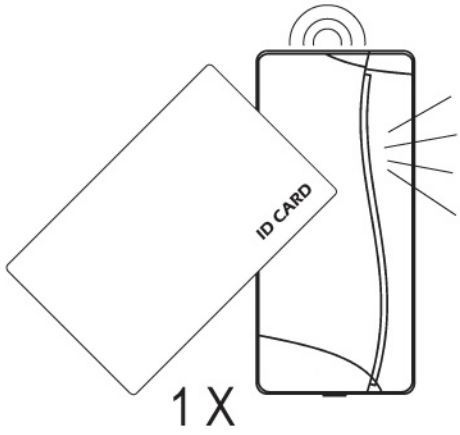

Federal Communications Commission (FCC) Interference Statement
This equipment has been tested and found to comply with the limits for a Class B digital device, pursuant to Part 15 of the FCC Rules.

These limits are designed to provide reasonable protection against harmful interference in a residential installation. This equipment generate, uses and can radiate radio frequency energy and, if not installed and used in accordance with the instructions, may cause harmful interference to radio communications.

However, there is no guarantee that interference will not occur in a particular installation. If this equipment does cause harmful interference to radio or television reception, which can be determined by turning the equipment off and on, the user is encouraged to try to correct the interference by one of the following measures:

- Reorient or relocate the receiving antenna.
- Increase the separation between the equipment and receiver.
- Connect the equipment into an outlet on a circuit different from that to which the receiver is connected.
- Consult the dealer or an experienced radio/TV technician for help.

This device complies with Part 15 of the FCC Rules. Operation is subject to the following two conditions:
(1)This device may not cause harmful interference, and (2) this device must accept any interference received, including interference that may cause undesired operation.

FCC Caution: Any changes or modifications not expressly approved by the party responsible for compliance could void the user’s authority to operate this equipment.

RF exposure warning
This equipment complies with FCC radiation exposure limits set forth for an uncontrolled environment.
The equipment must not be co-located or operating in conjunction with any other antenna or transmitter.

European Union Regulatory Conformance

The equipment complies with the RF Exposure Requirement 1999/519/EC; Council Recommendation of 12 July 1999 on the limitation of exposure of the general public to electromagnetic fields (0–300 GHz).

Changes or modifications to this product not authorized by our company could void the EMC compliance and negate your authority to operate the product. This product has demonstrated EMC compliance under conditions that included the use of compliant peripheral devices and shielded cables between system components. It is important that you use compliant peripheral devices and shielded cables between system components to reduce the possibility of causing interference to radios, televisions, and other electronic devices.

This equipment meets the following conformance standards:
EN 301489-1/-3;
EN 300330-1/-2;
EN 50364;
EN 60950-1

EU Declaration of Conformity
Hereby, Accuride International Inc. this product Stand-Alone Proximity Reader is in compliance with the essential requirements and other relevant provisions of Directive 1999/5/EC.

CE 0678

Manufacturer: Granding Technology Co., LTD
Address: A1501,Hi-TechBldg,900 Yishan Road, Shanghai 200233 P.R. China