Alcatel-Lucent 9768

Compact Metro Radio Outdoor

Site Preparation

3MN-01582-0001-RJZZA

Issue 0.03 | November 2015

Alcatel-Lucent – Proprietary
Use pursuant to applicable agreements

DRAFT

DRAFT

Alcatel·Lucent

DRAFT

Legal notice

Alcatel, Lucent, Alcatel-Lucent and the Alcatel-Lucent logo are trademarks of Alcatel-Lucent. All other trademarks are the property of their respective owners.

The information presented is subject to change without notice. Alcatel-Lucent assumes no responsibility for inaccuracies contained herein.

Copyright © 2015 Alcatel-Lucent. All rights reserved.

Contains proprietary/trade secret information which is the property of Alcatel-Lucent and must not be made available to, or copied or used by anyone outside Alcatel-Lucent without its written authorization.

Not to be used or disclosed except in accordance with applicable agreements.

DRAFT

Contents

DRAFT

About this document

Purpose xi

Intended audience xi

Supported systems xi

How to use this document xi

Safety information xii

Prerequisites xii

Site preparation checklists xii

Conventions used xii

Related information xiv

Document support xiv

Technical support xiv

How to order xv

How to comment xv

1 Safety statements

Overview 1-1

Structure of safety statements 1-2

General safety considerations 1-3

Safety 1-4

Safety - specific hazards 1-5

Product safety 1-9

2 Hardware architecture and functionality

Overview 2-1

DRAFT

Functional description 2-1

Physical description 2-3

7705 SAR-O hardware overview and ancillary 2-9

Supported installation options 2-15

Hardware and ancillary items 2-25

3 **Site selection**

Overview 3-1

Environmental and mechanical specifications 3-2

Spectrum analysis of RF neighborhood 3-3

Site requirements 3-4

Site power requirements (AC) 3-5

Site power requirements (DC) 3-7

9768 CMRO power requirements 3-9

Grounding and lightning protection 3-10

9768 CMRO product grounding 3-11

General antenna cable requirements 3-13

Site requirements for link to baseband processing unit 3-14

Site requirements for a wall mount installation 3-14

Site requirements for a pole mount installation 3-14

Site requirements for strand-mount installation 3-15

A **Site survey checklists**

Overview A-1

SS-1 Venue survey checklist A-1

SS-2 Site survey general checklist A-3

SS-3 Site survey access checklist A-6

SS-4 Site survey conclusion A-7

DRAFT

DRAFT

B Site preparation checklists

Overview B-1

SP-1 Site preparation general checklist B-2

SP-2 Site preparation power source checklist B-3

SP-3 Site preparation grounding checklist B-4

SP-4 Site preparation RF antenna checklist B-5

SP-5 Site preparation GPS antenna checklist B-6

Site preparation punch list sheet B-8

Site preparation punchlist sheet B-9

C Product conformance statements

Overview C-1

United States compliance

Introduction C-2

Federal Communications Commission C-2

Product safety conformance statements C-4

Antenna exposure statements C-5

FDA/IEC optical transmitter product compliance statements C-5

Eco-environmental statements C-6

Canadian compliance

Introduction C-8

Industry Canada C-8

Product safety and exposure C-8

Antenna exposure statements C-9

IEC optical transmitter product compliance statements C-10

Eco-environmental statements C-11

DRAFT

D Related information

Overview D-1

9768 CMRO documentation D-1

7705 SAR-O documentation D-2

LTE End-to-End Solution and LTE RAN documentation D-3

Surge, Grounding, and Lightning documentation D-5

Glossary

Index

List of tables

1 Terminology xi

2-1 9768 CMRO 2-4

2-2 Certifications and standards 2-5

2-3 Environmental parameters 2-5

2-4 7705 SAR-O dimensions 2-11

2-5 Single mode dual LC to LC 2-12

2-6 Single mode dual LC to FullAXS 2-13

2-7 Kit SAR-O - For channels 1471-1511 2-14

2-8 Kit SAR-O - For channels 1551-1591 2-14

2-9 SFP code for the fourth 7705 SAR-O connector 2-14

2-10 FULLAXS fiber field install kit 2-15

2-11 Pole-mount installation 2-26

2-12 Wall-mount installation 2-26

2-13 Pair-mount installation on a pole 2-26

2-14 Pair-mount installation on a wall 2-27

2-15 Strand-mount installation kit 2-27

3-1 Power materials 3-9

3-2 Grounding materials 3-11

D-1 Related Information - 9768 CMRO D-1

D-2 Related information - 7705 SAR-O D-2

D-3 Related Information - LTE RAN and E2E LTE Solution D-3

D-4 Related Information - Grounding, Lightning, and Surge D-5

DRAFT

DRAFT

DRAFT

DRAFT

List of figures

2-1 Alcatel-Lucent 9768 CMRO 2-3

2-2 Alcatel-Lucent 9768 CMRO connection interfaces 2-6

2-3 Alcatel-Lucent 7705 Service Aggregation Router-Optical 2-10

2-4 4-Wavelength CWDM Dual-Fiber models 2-11

2-5 9768 CMRO pole and wall-mount installation 2-16

2-6 Four 9768 CMROs served by a single mode dual fiber 2-17

2-7 Six 9768 CMROs served by two single mode dual fibers with different wavelengths 2-18

2-8 Six 9768 CMROs served by two single mode dual fibers with same wavelength 2-18

2-9 Six 9768 CMROs served by a single mode dual fiber 2-19

2-10 9768 CMRO daisy chaining installation example 2-23

2-11 Two 9768 CMROs pair-mounted on a pole 2-24

2-12 Two 9768 CMROs pair-mounted on a wall 2-24

DRAFT

DRAFT

DRAFT

DRAFT

DRAFT

About this document

Purpose

This document covers the basic site preparation guidelines that should be used to plan an Alcatel-Lucent 9768 Compact Metro Radio Outdoor site. Specific tasks are outlined that should be completed at the job site before an installation can begin.

Intended audience

The audience for this document is Site Preparation personnel relating to the Alcatel-Lucent 9768 Compact Metro Radio Outdoor (9768 CMRO).

Supported systems

This document applies to the following Alcatel-Lucent 9768 Compact Metro Radio Outdoor models:

- Alcatel-Lucent 9768 Compact Metro Radio Outdoor B66 (AWS1-3) 2x5W v2

How to use this document

Start with the first chapter and work through the manual to the end. Prior to installing the product, the installer should be familiar with the safety precautions, warnings, and product conformance statements.

Listed are terminology and naming conventions that may appear in the 9768 CMRO documentation.

Table 1 Terminology

The full product name, Alcatel-Lucent 9768 Compact Metro Radio Outdoor B66 (AWS1-3) 2x5W v2, is also referred to as: • Alcatel-Lucent 9768 CMRO • 9768 CMRO

DRAFT

DRAFT

Table 1 Terminology (continued)

The full product name, Alcatel-Lucent 7705 Service Aggregation Router-Optical (SAR-O), is also referred to as: • Alcatel-Lucent 7705 SAR-O • 7705 SAR-O
The full product name, Alcatel-Lucent 5620 Service Aware Manager (SAM), is also referred to as: • Alcatel-Lucent 5620 SAM • 5620 SAM
The terms eNodeB Network Element Manager (NEM), eNodeB NEM, and NEM are used to describe the eNodeB local maintenance applications.

Safety information

For your safety, this document contains safety statements. Safety statements are given at points where risks of damage to personnel, equipment, and operation may exist. Failure to follow the directions in a safety statement may result in serious consequences.

Prerequisites

None

Site preparation checklists

All site preparation activities, as well as adherence to the guidelines, should be verified prior to the installation of the cell site equipment.

Various checklists and punchlist sheets have been provided in Appendix A of this document to aid customers and Alcatel-Lucent personnel during a base station site Method of Procedure (MOP) walk-through prior to the equipment installation.

Utilization of the checklists helps ensure a quality installation and provides a base station site history file for later reference. The punchlist sheets are used to track completion of any outstanding site preparation items, and to aid in the project management of installation resources.

Conventions used

The following typographical conventions are used in this manual:

Appearance	Description
emphasis	Text that is emphasized

DRAFT

DRAFT

Appearance	Description
document titles	Titles of books or other documents
file or directory names	The names of files or directories
graphical user interface text	Text that is displayed in a graphical user interface or in a hardware label
keyboard keys	The name of a key on the keyboard
`system input`	Text that the user types as input to a system Command names and text that the user types or selects as input to a system
`system output`	Text that a system displays or prints
`variables`	A value or command-line parameter that the user provides
[ ]	Text or a value that is optional
{**`value1`** | **`value2`**} {*`variable1`* | *`variable2`*}	A choice of values or variables from which one value or variable is used
<*delimited text*>	Specifies: • Text that is time-dependent (such as release, version, date, or time stamp) displayed in file and directory names • A value that the user supplies **Examples:** "The ATM and IP rules files are stored in the <*User-home-directory*>\<*WPS-version*>*data\user\ samples\rules* directory." "The list of parameters you must fill in is provided in a template zip file: *wps-lte-templates-*<*version*>*.zip* "
>	Indicates access to a function through a menu sequence. The " **>** " (greater than) symbol is used to represent the succession of menus or commands selected from the graphical user interface (GUI) or a PC or Citrix server menu or task bar item.[1] **Example:** "Select the **Import** command of the **Template** menu (submenu of **Interfaces**)…" is indicated by: "Select **Interfaces > Template > Import**…"

DRAFT

Appearance	Description
+	The **+** (plus) symbol is used to form key combinations that are pressed simultaneously, such as **SHIFT+ALT+L**.
>	Use the " **>** " (greater than) symbol to form key combinations that are pressed and then released in sequence, such as **ESC>ALT>A**.[2]

Notes:

1. Spaces *are included* on either side of the " **>** " (greater than) symbol when used to represent the succession of menus or commands from the graphical user interface (GUI) or a PC menu or task bar item.
2. Spaces *are not included* on either side of the " **>** " symbol when used to represent keyboard key combination that are pressed and then released in sequence.

Related information

For information on subjects related to this product, refer to the documents listed in

Appendix D, "Related information"

Document support

For support in using this or any other Alcatel-Lucent document, contact Alcatel-Lucent at the following telephone numbers.

From United States

- If you are using a landline, a cellular phone or VoIP, dial this number: **1-888-582-3688**

From other countries

- If you are using a cellular phone or VoIP, dial this number: **+1-630-224-2485**
- If you are using a landline (phone without a plus [+] character), replace the plus sign with the corresponding exit code. Dial this number: *Exit code for the country of origin*: **1-630-224-2485. See the country-specific exit codes listed** here.

These numbers apply for document support only. For details about product hardware, software, and technical support, see the section "Technical support".

Technical support

For technical support, contact your local Alcatel-Lucent customer support team. See the Alcatel-Lucent Support web site (http://www.alcatel-lucent.com/support/) for contact information.

DRAFT

How to order

To order Alcatel-Lucent documents, contact your local sales representative or use Online Customer Support (OLCS) (http://support.alcatel-lucent.com).

How to comment

Note to reviewers: The following "How to comment" text will appear in the final document when it is published. However, the feedback method described below is for use only on final documents. Please send your review comments to the author using the process you were given when you received this draft document.

To comment on this document, go to the Online Comment Form (http://infodoc.alcatel-lucent.com/comments/) or e-mail your comments to the Comments Hotline (comments@alcatel-lucent.com).

DRAFT

DRAFT

DRAFT

DRAFT

1 Safety statements

Overview

Purpose

This chapter provides general information on the structure of safety instructions and summarizes general safety requirements.

General safety and residual risk

The equipment has been developed in line with state-of-the-art technology and conforms with current national and international safety requirements.

The equipment is considered safe during normal operation when safe working practices are complied with. However, hazards may arise if procedures are not followed correctly or safe working practices are not complied with.

Contents

Structure of safety statements	1-2
General safety considerations	1-3
Safety	1-4
Safety - specific hazards	1-5
Product safety	1-9

DRAFT

DRAFT

Structure of safety statements

Overview

This topic describes the components of safety statements that appear in this document.

General structure

Safety statements include the following structural elements:

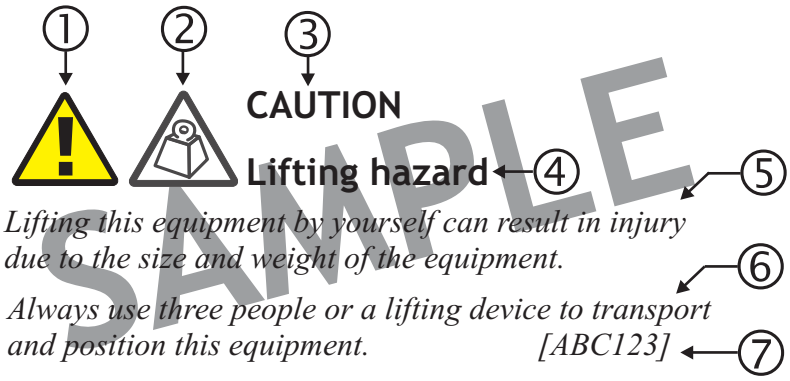

Item	Structure element	Purpose
1	Safety alert symbol	Indicates the potential for personal injury (optional)
2	Safety symbol	Indicates hazard type (optional)
3	Signal word	Indicates the severity of the hazard
4	Hazard type	Describes the source of the risk of damage or injury
5	Safety message	Consequences if protective measures fail
6	Avoidance message	Protective measures to take to avoid the hazard
7	Identifier	The reference ID of the safety statement (optional)

DRAFT

DRAFT

Signal words

The signal words identify the hazard severity levels as follows:

Signal word	Meaning
DANGER	Indicates an extremely hazardous situation which, if not avoided, will result in death or serious injury.
WARNING	Indicates a hazardous situation which, if not avoided, could result in death or serious injury.
CAUTION	Indicates a hazardous situation which, if not avoided, could result in minor or moderate injury.
NOTICE	Indicates a hazardous situation not related to personal injury.

General safety considerations

Shock hazards

WARNING

Electric-shock hazard

Some parts of all electrical installations are energized. Failure to follow safe work practices and the safety warnings may lead to bodily injury and property damage.

For this reason, only trained and qualified personnel (electrical workers as defined in IEC 60215 or EN 60215 + A1 or in the National Electrical Code or in ANSI/NFPA No. 10) may install or service the installation.

WARNING

Electric-shock hazard

There is a danger of electric shock if the grounding system is inadequate.

You must comply with the grounding requirements for the grounding system.

DRAFT

DRAFT

Safety

General precautions for installation procedures

WARNING

Failure to observe these safety precautions may result in personal injury or damage to equipment.

- *Read and understand all instructions.*
- *Follow all warnings and instructions marked on this product.*
- *Installation and maintenance procedures must be followed and performed by trained personnel only.*
- *The equipment must be provided with a readily accessible disconnect device as part of site preparation.*
- *Grounding and circuit continuity is vital for safe operation of the equipment. Never operate the equipment with grounding/bonding conductor disconnected.*
- *Install only equipment identified in the product's installation manual. Use of other equipment may result in an improper connection which could lead to fire or injury.*
- *Use caution when installing or modifying telecommunications equipment.*
- *Before servicing, disconnect power input to reduce the risk of energy hazards.*
- *For continued protection against risk of fire, all fuses used in this product must be replaced only with fuses of the same type and rating.*
- *Never install telecommunications equipment during a lightning storm or when conditions are wet.*
- *Never touch uninsulated wiring or terminals carrying direct current or ringing current, and never leave this wiring exposed. Protect and tape uninsulated wiring and terminals to avoid risk of fire, electrical shock, and injury to personnel.*
- *Never spill liquids of any kind on the product.*
- *To reduce the risk of an electrical shock, do not disassemble the product. Opening and removing covers and/or circuit boards may expose you to dangerous voltages or other risks. Incorrect reassembly can cause electrical shock when the unit is subsequently used.*
- *for PERMANENTLY CONNECTED EQUIPMENT, a readily accessible disconnect device must be incorporated external to the equipment.*

DRAFT

DRAFT

Safety - specific hazards

Danger

DANGER

Electric-shock hazard

Working in severe weather can result in personal injury or death and damage to the equipment.

Never install or perform maintenance during severe weather (high winds, lightning, blizzards, hurricane etc.).

DANGER

Noxious-substance hazard

Use of unspecified cleaning agents can result in personal injury.

Use only specified cleaning agents. Never use flammable solvents.

Always ensure that there is adequate ventilation in the work area and wear the appropriate personal protective equipment.

Warning

WARNING

Laser hazard

Use of controls or adjustments or performance of procedures other than those specified herein may result in hazardous laser radiation exposure.

Do not view directly into the laser beam with optical instruments such as a fiber microscope because viewing of laser emission in excess of Class 1 limits significantly increases the risk of eye damage.

Never look into the end of an exposed fiber or an open connector as long as the optical source is switched on.

Ensure that the optical source is switched off before disconnecting optical fiber connectors.

DRAFT

WARNING

Electric-shock hazard

Some parts of all electrical installations are energized. Failure to observe this fact and the safety warnings may lead to bodily injury and property damage.

For this reason, only trained and qualified personnel (electrical workers as defined in IEC 60215 + A1 or EN 60215) may install or service the installation.

WARNING

Electric-shock hazard

The power supply lines to the equipment are energized. Contact with parts carrying current can cause serious injury, possibly including death, even hours after the event.

Turn off and lock out the system power at the disconnect device before working on or servicing the equipment.

WARNING

Fall hazard

Falls can occur when working at heights resulting in serious personal injury or death.

To prevent a fall when working at heights (ladder, scaffold, manlift, roof etc.) follow safe work practices and wear appropriate fall protection equipment.

Caution

CAUTION

RF hazard

RF exposure in excess of applicable limits can result in personal injury.

Metro Cells are designed and installed in order that they are compliant with the exposure guidelines laid down by 47 CFR 1.1307 -1.1310.

For all staff that are required to work in close proximity to the equipment, for example maintenance personnel, contact with the antenna should be avoided. No such persons shall stay in front of the product at a distance of less than 8 cm.

No other persons shall stay in front of the product at a distance of less than 22 cm.

DRAFT

CAUTION

Electric-shock hazard

DOUBLE POLE/NEUTRAL FUSING

A fuse is used in the neutral of single-phase equipment either permanently connected or provided with a non-reversible plug. After operation of the fuse, parts of the equipment that remain energized might represent a hazard during servicing.

Failure to observe this fact and the safety warnings may lead to bodily injury and property damage.

CAUTION

Hot-surface hazard

The surfaces of the CMRO can become hot enough to cause burns on unprotected skin. On the product label, the universal symbol for Hot Surface (shown here) emphasizes this hazard.

Before handling the unit, wait until its surfaces have cooled and, where the following conditions apply, ensure that it is mounted out of the public's reach.

For installations in ambient temperatures exceeding 46° C, surface temperature may exceed 70° C. In these situations, this equipment is intended for installation where access is restricted to only qualified service personnel.

DRAFT

Notices

NOTICE

ESD hazard

Semiconductor devices can be damaged by electrostatic discharges (ESD)

The following rules must be complied with when handling any module containing semiconductor components:

- *Wear conductive or antistatic working clothes (for example, coat made of 100% cotton).*
- *Wear a grounded wrist strap.*
- *Wear shoes with conductive soles on a conductive floor surface or conductive work mat.*
- *Leave the modules in their original packaging until ready for use.*
- *Make sure there is no difference in potential between yourself, the workplace, and the packaging before removing, unpacking, or packing a module.*
- *Whenever handling ESD-sensitive components, do not touch any connection pins or tracks.*
- *Place modules removed from the equipment on a conductive surface.*
- *Test or handle the module only with grounded tools on grounded equipment.*
- *Handle defective modules exactly like new ones to avoid causing further damage.*

NOTICE

Condensation

Sudden changes in the weather may lead to the formation of condensation on components. Operating the unit when condensation moisture is present can destroy the unit.

Units which show signs of condensation must be dried before installation.

NOTICE

Tools

Tools left in the working area can cause short circuits during operation which can lead to the destruction of units.

Make sure after finishing your work that no tools, testing equipment, flashlights, etc., have been left in or on the equipment.

DRAFT

Product safety

Equipment safety

Safety information for this equipment can be found on various Caution, Warning, Danger, information labels or instructions affixed to or included with the product or included within this document. Informational and cautionary labels may appear near the item they address or may be grouped in a single location on the equipment. Warnings are typically adjacent to the hazard that is noted on the label. The instructions, cautions and warnings found on these labels must be understood and observed by all personnel involved with the equipment installation and maintenance.

DRAFT

DRAFT

DRAFT

DRAFT

2 Hardware architecture and functionality

Overview

Purpose

This chapter provides a high-level overview of the Alcatel-Lucent 9768 Compact Metro Radio Outdoor (9768 CMRO) product and functionality.

Contents

Functional description	2-1
Physical description	2-3
7705 SAR-O hardware overview and ancillary	2-9
Supported installation options	2-15
Hardware and ancillary items	2-25

Functional description

Overview

The Alcatel-Lucent 9768 Compact Metro Radio Outdoor product is a next-generation Metro Radio Outdoor product with 10x the output power at half the size when compared with the Alcatel-Lucent 9768 Metro Radio Outdoor (9768 MRO), that enables mobile service providers (MSPs) to deliver cost-effective capacity to urban hotspots, for example, stadiums, campuses, train stations, bus stops and other urban environments, as well as affordable coverage to rural locations. It is designed to be deployed as an overlay in an existing macro coverage area to provide increased coverage in public open spaces.

DRAFT

9768 CMRO
with Solar Shield

9768 CMRO
without Solar Shield

Product features and capabilities

The product features and capabilities in this release are:

- Supports band 66 (B66) with a reduced high-end (WRHE) of 2180 MHz and a 10-MHz guard band instead of a 2200 MHz high-end
- Supports LTE FDD
- Supports the following LTE carriers:
  - 5 MHz
  - 10 MHz
  - 15 MHz
  - 20 MHz
- Supports the AWS-1 frequency range (AWS-4 frequency range is not supported)

  Note: The 9768 CMRO is hardware ready to support the entire AWS-1/3 frequency range. In the LR15.1.L release, only AWS-1 is fully supported.
- Supports UL of 1710 to 1780 MHz (70 MHz), and DL of 2110 to 2180 MHz (70 MHz)
- 2x5W total power at antenna connector
- Standard 2x2 MIMO configurations, 2-Tx and 2-Rx diversity
- Supports plug-and-play (PnP) to connect automatically to the network
- Supports CPRI fronthaul and daisy chaining of up to four 9768 CMROs
- CSA, FCC, and IP65 certifications

DRAFT

Physical description

Overview

The Alcatel-Lucent 9768 Compact Metro Radio Outdoor is housed in an Alcatel-Lucent designed metallic case, adhering to NEMA Type 4 enclosure standard. The product is designed to be deployed close to users, usually in outdoor environments, such as on light poles or building walls, with a vertical profile that hides cable connectors and mounting kit for a smooth integration into the surrounding environment.

The 9768 CMRO product is shown in the following figure.

Figure 2-1 Alcatel-Lucent 9768 CMRO

9768 CMRO
(Front view with
Solar Shield)

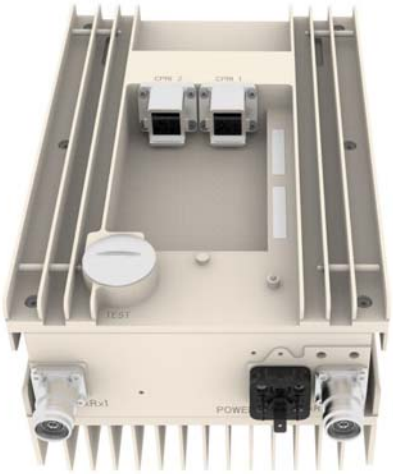

9768 CMRO
(Rear view)

Weights and dimensions

The physical dimensions of the Alcatel-Lucent 9768 CMRO are:

DRAFT

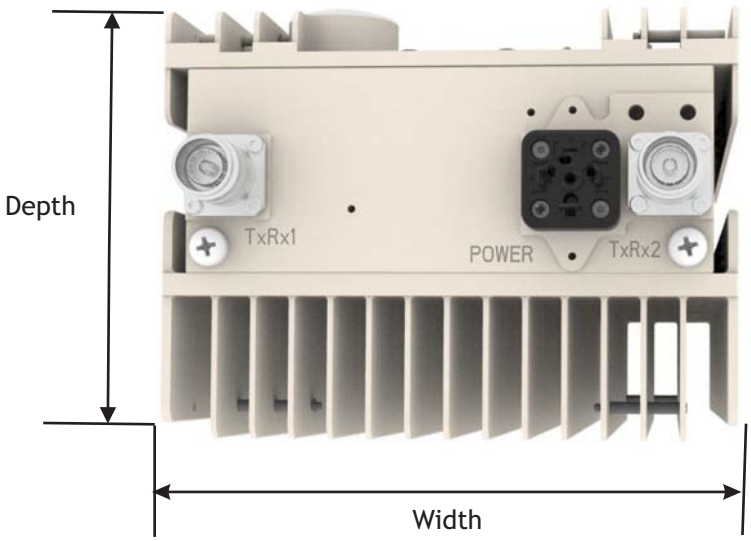

9768 CMRO
bottom view

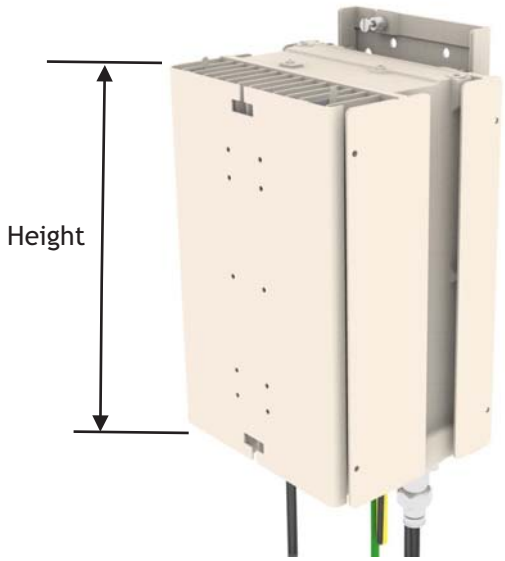

9768 CMRO
front view with
Solar Shield

Table 2-1 9768 CMRO

Width	180 mm (7.1 in)
Height	265 mm (10.4 in)
Depth	135 mm (5.3 in), including Solar Shield
Volume	6.5 L
Weight	6.8 kg (15 lb)

DRAFT

Environmental and regulatory specifications

Table 2-2 Certifications and standards

Safety	CSA
Radio	FCC
Environmental	IP65

Table 2-3 Environmental parameters

Temperature range	- 40°C to +50°C (+55°C with Solar Shield)
Relative humidity	5% to 100%

Main units

The 9768 CMRO is made up of four main units, which are responsible for radio, RF filtering, fronthaul and power supply functions.

Unit	Function
MOAD2 board	SFP modules and power forwarding: • Two CPRI SFP ports • 5.3-V to 3.3-V power convertor
Radio board	Radio: • LTE Band 66 • Two mini-DIN 4.3-10 external RF antenna connectors
RF filter	RF antenna filter that supports: • B66 (WRHE) UL frequency range from 1710 MHz to 1780 MHz • B66 (WRHE) DL frequency range from 2110 MHz TO 2180 MHz
Power Supply Unit (PSU)	• PSU AC variant - Internal power module unit provides AC-to-DC conversion (5.3 V output) to the MOAD2 board. • PSU DC variant - Internal power module unit provides DC-to-DC conversion (5.3 V output) to the MOAD2 board. The MOAD2 board distributes 5.3 V output and provides secondary DC-to-DC conversion to generate all other (lower) voltages needed within the board.

DRAFT

Connection interfaces

The following figure shows the connection interfaces of the 9768 CMRO.

Figure 2-2 Alcatel-Lucent 9768 CMRO connection interfaces

9768 CMRO (bottom view)

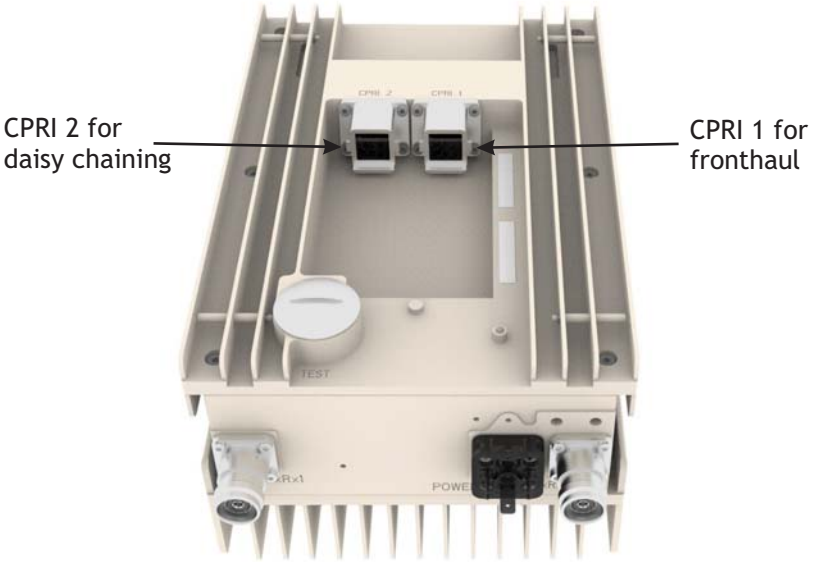

9768 CMRO (rear view)

DRAFT

Connection location	Description
9768 CMRO (bottom)	Power supply connector (AC or DC) Two mini-DIN 4.3-10 RF antenna connectors Grounding point
9768 CMRO (rear)	Two CPRI SFP ports; “CPRI 1” and “CPRI 2” “CPRI 1” is used to connect to the BBU or to daisy-chain with another 9768 CMRO and “CPRI 2” is used to daisy chain to the next 9768 CMRO

Power supply

The Alcatel-Lucent 9768 CMRO product supports either AC or DC external power input.

9768 CMRO	Power supply details
AC variant	AC power supply that operates from a single phase, three wire voltage source in the 95 to 265 Volt range. The AC power is surge protected internally, and conforms to IEC 60364-1 and GR-1089-Core, Issue 6, Section 4.6.2, Table 4-2 Surge Test #20. Fully configured and operating at maximum levels, the product consumes 100 W. Typical power consumption is 85 W.
DC variant	-48 V DC power supply that operates over the voltage range from -40 V DC to -57 V DC. The DC power is surge protected internally, and conforms to GR-1089, Issue 6, Appendix B for Port Type 8a. Fully configured and operating at maximum levels, the product consumes 100 W. Typical power consumption is 85 W.

Fronthaul interface

The fronthaul interface is at the back of the 9768 CMRO supporting two optical CPRI SFP ports:

- The “CPRI 1” SFP port (CPRI input port) is used to connect to the BBU or to the daisy chaining port of another 9768 CMRO.
- The “CPRI 2” SFP port (Daisy chaining output port) is used for daisy chaining to another 9768 CMRO.

DRAFT

DRAFT

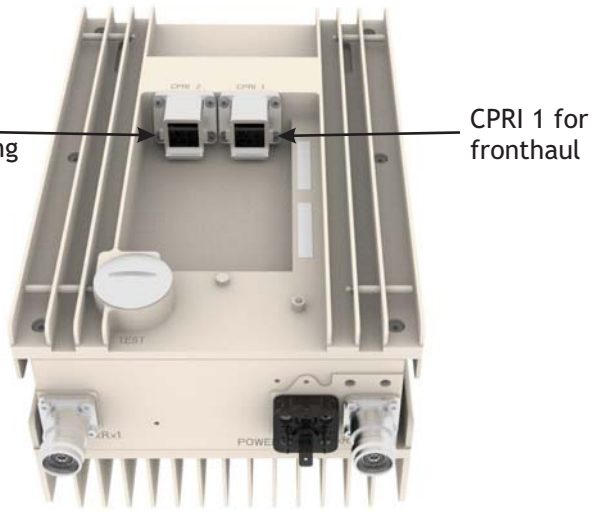

9768 CMRO (rear view)

RF antenna

The Alcatel-Lucent 9768 CMRO supports two external antenna connectors (type mini-DIN) at the bottom of the enclosure supporting external RF antennas. The external RF antennas are customer supplied.

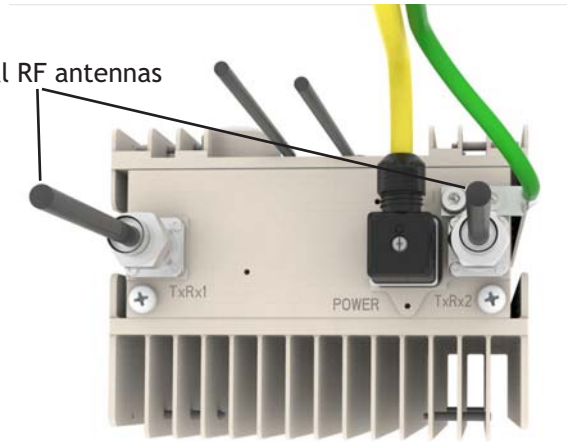

Status indicators

The 9768 CMRO supports a single multi-color LED which is located on the rear lower portion of the casing. The LED is not intended for use during normal operation of the equipment. However, it can provide a visual status of the unit during initial installation and commissioning.

DRAFT

DRAFT

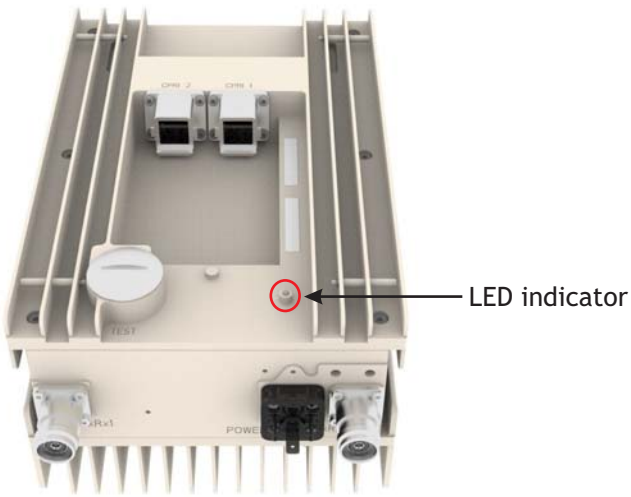

9768 CMRO
(rear view)

Product labeling

The Alcatel-Lucent 9768 CMRO product label provides the following information:

- Model name
- Part number
- Serial number
- Power input range
- Environmental marking (WEEE/RoHS) applicable to the device

7705 SAR-O hardware overview and ancillary

Product overview

The Alcatel-Lucent 7705 Service Aggregation Router-Optical (7705 SAR-O) is a passive optical unit used to multiplex (add) and de-multiplex (drop) up to eight Coarse Wavelength Division Multiplex (CWDM) wavelengths from an optical network. The primary function of 7705 SAR-O is to provide front-haul and back-haul support to the 9768 CMRO.

The 7705 SAR-O is designed for outdoor installations, such as on a pole, wall or side of a building in an extended temperature environment.

DRAFT

Figure 2-3 Alcatel-Lucent 7705 Service Aggregation Router-Optical

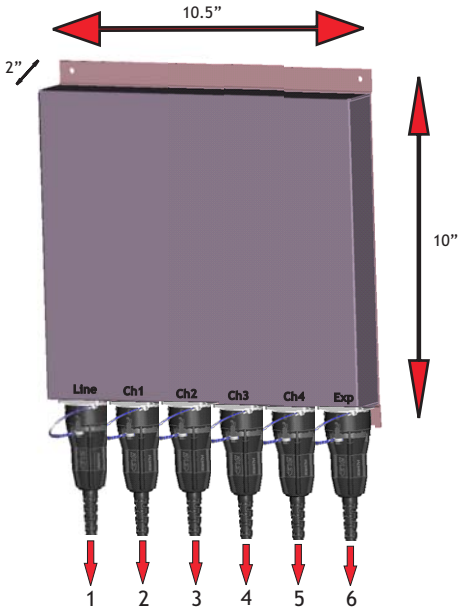

Legend:

1	Line port
2	Add/drop port 1
3	Add/drop port 2
4	Add/drop port 3
5	Add/drop port 4
6	Expansion port

Using 7705 SAR-O, the number of fibers required to connect multiple 9768 CMROs can be significantly reduced. The 7705 SAR-O supports up to six 9768 CMROs to be connected using either one or two single mode dual fibers depending on the configuration. Optionally, this configuration can be extended to connect a fourth 9768 CMRO on each 7705 SAR-O unit by ordering additional SFPs for the fourth port of each 7705 SAR-O unit. To support eight CPRI connections, customer orderable 9926 BBU equipped with eCCM2 controller card (support up to nine CPRI connections) is used.

For repair and replacement instructions, refer to the installation instructions provided with the 7705 SAR-O installation kit or contact your local Alcatel-Lucent customer support team.

DRAFT

Power supply

The 7705 SAR-O does not require an external power supply (a passive unit).

Dimensions

The following table provides the dimensions of only the 7705 SAR-O.

Table 2-4 7705 SAR-O dimensions

7705 SAR-O (H x W x D)	10.24 x 10.05 x 2.17 inches
7705 SAR-O	4.0 lbs (1.8 kg)

Chassis

The 4-Wavelength CWDM Dual-Fiber variant of 7705 SAR-O is used for installation with the 9768 CMRO.

4-Wavelength CWDM Dual-Fiber

The 4-wavelength CWDM dual-fiber is used to drop and add four specific wavelengths from the network. However, other wavelengths are allowed to pass through. This variant can also add other wavelengths and allow a 1310 nm signal to pass through in the case of a CWDM OADM linear 1310 nm application.

This variant is available in the following two models:

- 3HE07939AA - Used to add and drop 1471/1491/1511/1531 nm wavelengths
- 3HE07939BA - Used to add and drop 1551/1571/1591/1611 nm wavelengths.

Figure 2-4 4-Wavelength CWDM Dual-Fiber models

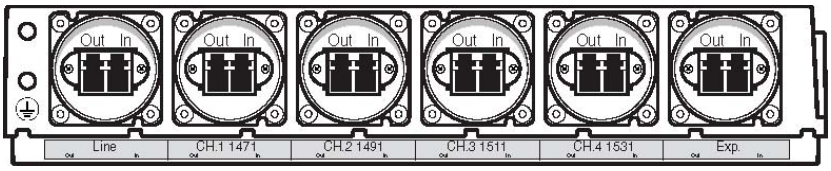

3HE07939AA - Add and drop 1471/1491/1511/1531 nm wavelengths

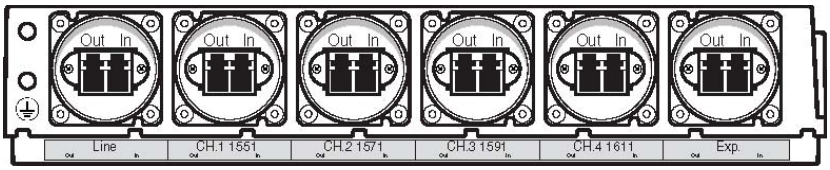

3HE07939BA - Add and drop 1551/1571/1591/1611 nm wavelengths

DRAFT

7705 SAR-O installation with 9768 CMRO

For installation configuration of 7705 SAR-O with 9768 CMRO, refer to the *7705 SAR-O Quick Start Guide* provided within the "Kit SAR-O" (p. 2-13).

The following table provides the ordering codes for the 7705 SAR-O and 7705 SAR-8 OADM adapter card:

Comcode	Description
3HE07939AA	7705 SAR-O Dual-Fiber CWDM 4 color 1471-1531
3HE07939BA	7705 SAR-O Dual-Fiber CWDM 4 color 1551-1611
3HE06584AA	4-channel CWDM OADM adapter card 1471/1491/1511/1531 nm
3HE06585AB	4-channel CWDM OADM adapter card 1551/1571/1591/1611 nm
3HE06585AA	7705 SAR-8/18 8 COLOR MUX/DEMUX 1471- 1611 (for configuration - C)

Cable and ancillary items

Single mode dual LC to LC

The following table provides the ordering codes for the Single mode dual LC to LC fibers used for the connection between 9926 BBU and 7705 SAR-8:

Table 2-5 Single mode dual LC to LC

Comcode	Description
849147590	OPTICAL FIBER SMDF DUAL LC TO LC 2,5m
849134879	OPTICAL FIBER SMDF DUAL LC TO LC 5M
849157912	OPTICAL FIBER SMDF DUAL LC TO LC 10M
849122239	OPTICAL FIBER SMDF DUAL LC TO LC 15M
849125380	OPTICAL FIBER SMDF DUAL LC TO LC 30M
849122247	OPTICAL FIBER SMDF DUAL LC TO LC 50M
849123591	OPTICAL FIBER SMDF DUAL LC TO LC 70M
849125398	OPTICAL FIBER SMDF DUAL LC TO LC 85M
849123609	OPTICAL FIBER SMDF DUAL LC TO LC 100M
849125406	OPTICAL FIBER SMDF DUAL LC TO LC 150M
849125414	OPTICAL FIBER SMDF DUAL LC TO LC 200M
849125422	OPTICAL FIBER SMDF DUAL LC TO LC 250M
849125430	OPTICAL FIBER SMDF DUAL LC TO LC 300M

DRAFT

Single mode dual LC to FullAXS

The Single mode dual LC to FullAXS fiber is used for the connection between:

- 9768 CMRO and 7705 SAR-O
- 7705 SAR-O and 7705 SAR-8
- 7705 SAR-O and 7705 SAR-O

The following table provides the ordering code for the Single mode dual optical fibers:

Table 2-6 Single mode dual LC to FullAXS

Comcode	Description
849175641	Optical FBR SMDF Dual LC TO FULLAXS 1 m
849174453	Optical FBR SMDF Dual LC TO FULLAXS 5 m
849174461	Optical FBR SMDF Dual LC TO FULLAXS 15 m
849174479	Optical FBR SMDF Dual LC TO FULLAXS 30 m
849174487	Optical FBR SMDF Dual LC TO FULLAXS 50 m
849174495	Optical FBR SMDF Dual LC TO FULLAXS 70 m
849174503	Optical FBR SMDF Dual LC TO FULLAXS 85 m
849174511	Optical FBR SMDF Dual LC TO FULLAXS 100 m
849174529	Optical FBR SMDF Dual LC TO FULLAXS 150 m
849174537	Optical FBR SMDF Dual LC TO FULLAXS 200 m
849174545	Optical FBR SMDF Dual LC TO FULLAXS 250 m
849174552	Optical FBR SMDF Dual LC TO FULLAXS 300 m

Kit SAR-O

The Kit SAR-O contains:

- SFP (Qty 6)
- 10dB Attenuator (Qty 2)
- *7705 SAR-O Quick Start Guide*

The SFPs are used for the connection of first three channels between 9768 CMRO and 7705 SAR-O. The 10dB Attenuator is required for the installation on 7705 SAR-O, on each Line port of the 4-Channel OADM adapter card.

DRAFT

The following tables provide the ordering codes for the Kit SAR-O:

Table 2-7 Kit SAR-O - For channels 1471-1511

Comcode	Description
301094298	**KIT, SAR-O CHANNELS 1471-1511**
KIT, SAR-O CHANNELS 1471-1511 contents	
1AB402160002	SFP CKT MODULE,CWDM,OC-48/STM16,1471 NM (Qty 2)
1AB402160003	SFP CKT MODULE,CWDM,OC-48/STM16,1491 NM (Qty 2)
1AB402160004	SFP CKT MODULE,CWDM,OC-48/STM16,1511 NM (Qty 2)
1AB252030001	10dB Attenuator (Qty 2)
109812974	SAR-O QUICK START GUIDE

Table 2-8 Kit SAR-O - For channels 1551-1591

Comcode	Description
301094306	**KIT, SAR-O CHANNELS 1551-1591**
KIT, SAR-O CHANNELS 1551-1591 contents	
1AB402160006	SFP CKT MODULE,CWDM,OC-48/STM16,1551 NM (Qty 2)
1AB402160007	SFP CKT MODULE,CWDM,OC-48/STM16,1571 NM (Qty 2)
1AB402160008	SFP CKT MODULE,CWDM,OC-48/STM16,1591 NM (Qty 2)
1AB252030001	10dB Attenuator (Qty 2)
109812974	SAR-O QUICK START GUIDE

SFPs for the fourth 7705 SAR-O connector

The following table provides the ordering codes for SFPs that are used only for the fourth 7705 SAR-O connector:

Table 2-9 SFP code for the fourth 7705 SAR-O connector

Comcode	Description
1AB402160005	SFP CKT MODULE, CWDM, OC-48/STM16, 1531 NM
1AB402160009	SFP CKT MODULE, CWDM, OC-48/STM16 ,1611 NM

FULLAXS fiber field install kit

The FullAXS connector (FULLAXS field install kit (0.3 m), Fiber 4.8-6.5 mm OD) is used as an assembly on the 7705 SAR-O to connect the 9768 CMRO.

DRAFT

The following table provides the ordering code for the FULLAXS field install kit (0.3 m), Fiber 4.8-6.5 mm OD:

Table 2-10 FULLAXS fiber field install kit

Comcode	Description
1AB431220004	FULLAXS Fiber Field Install Kit (0.3m), FIBER 4.8-6.5 mm OD

Supported installation options

Overview

The following section describes the supported installation options for the Alcatel-Lucent 9768 CMRO product. These include:

- Standard installation options for 9768 CMRO (pole and wall-mount installation).
- 9768 CMRO (AC or DC variant) with 7705 SAR-O, separate mount installation options
- Strand-mount installation option, where one or two DC powered 9768 CMROs, an 90v AC Coax to -48v DC converter and the RF antennas are mounted on a cable strand.
- Daisy chain installation options, where up to four 9768 CMROs can be daisy-chained together and share the same fronthaul port.
- Pair-mounted installation options, where two 9768 CMROs are mounted side-by-side using a double Metro plate.
- Other co-located installation options, where two 9768 CMROs are mounted side-by-side or one on top of another, without using a double Metro plate.

Standard installation options

The standard installation options include pole (light poles, lamp posts and so on) and wall-mount (building walls) installations.

DRAFT

Figure 2-5 9768 CMRO pole and wall-mount installation

Pole-mount installation

Wall-mount installation

9768 CMRO (AC or DC variant) with 7705 SAR-O, separate mount installation options

The following three separate mount installation options are supported for the 9768 CMRO with 7705 SAR-O:

- Four 9768 CMROs served by a single mode dual fiber
- Six 9768 CMROs served by two single mode dual fibers
- Six 9768 CMROs served by a single mode dual fiber

For installation configuration of 7705 SAR-O with 9768 CMRO, see "7705 SAR-O installation with 9768 CMRO " (p. 2-12).

Four 9768 CMROs served by a single mode dual fiber configuration

In this configuration, four 9768 CMROs are connected to a single 7705 SAR-O unit. The 7705 SAR-O is served by a Single mode dual fiber that connects to the 7705 SAR-8 unit, equipped with a 4-Channel OADM adapter card to support four 9926 BBU CPRI connections.

DRAFT

Figure 2-6 Four 9768 CMROs served by a single mode dual fiber

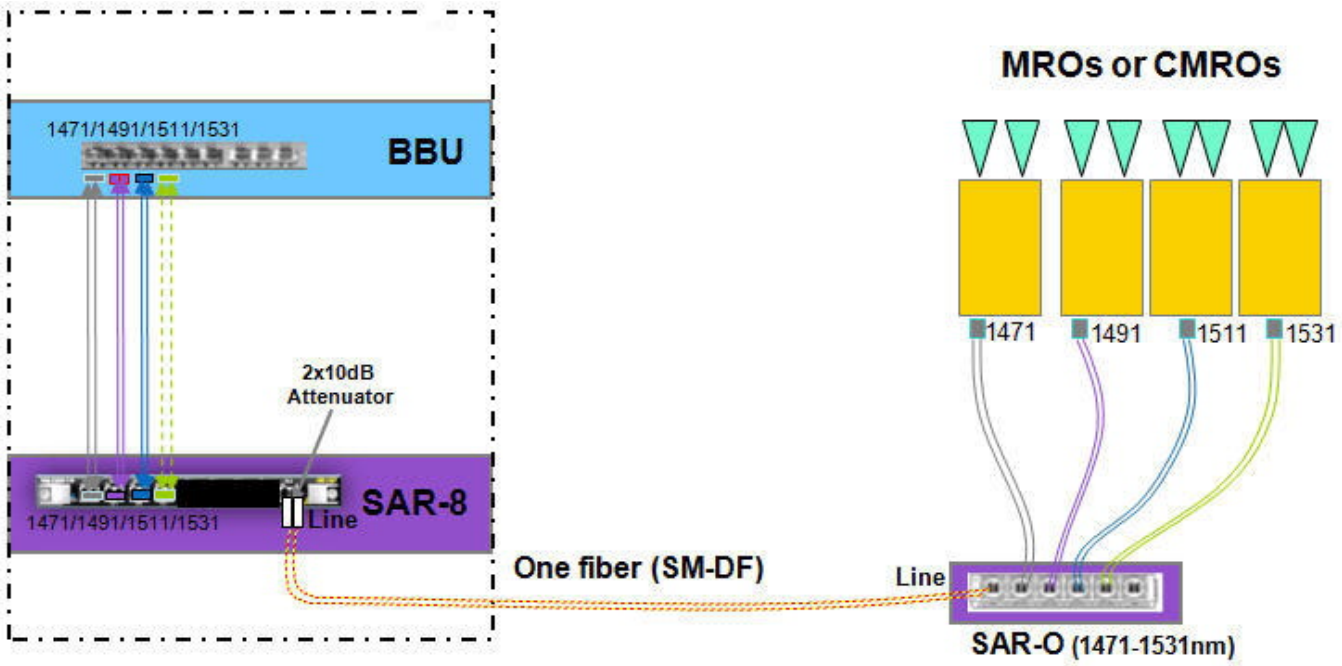

Six 9768 CMROs served by two single mode dual fibers configuration

In this configuration, six 9768 CMROs are connected to two 7705 SAR-O units, by connecting three 9768 CMROs to each 7705 SAR-O unit. The two 7705 SAR-O units are each served by a Single mode dual fiber that connects to a single 7705 SAR-8 unit, equipped with two 4-Channel OADM adapter cards to support six 9926 BBU CPRI connections.

DRAFT

Figure 2-7 Six 9768 CMROs served by two single mode dual fibers with different wavelengths

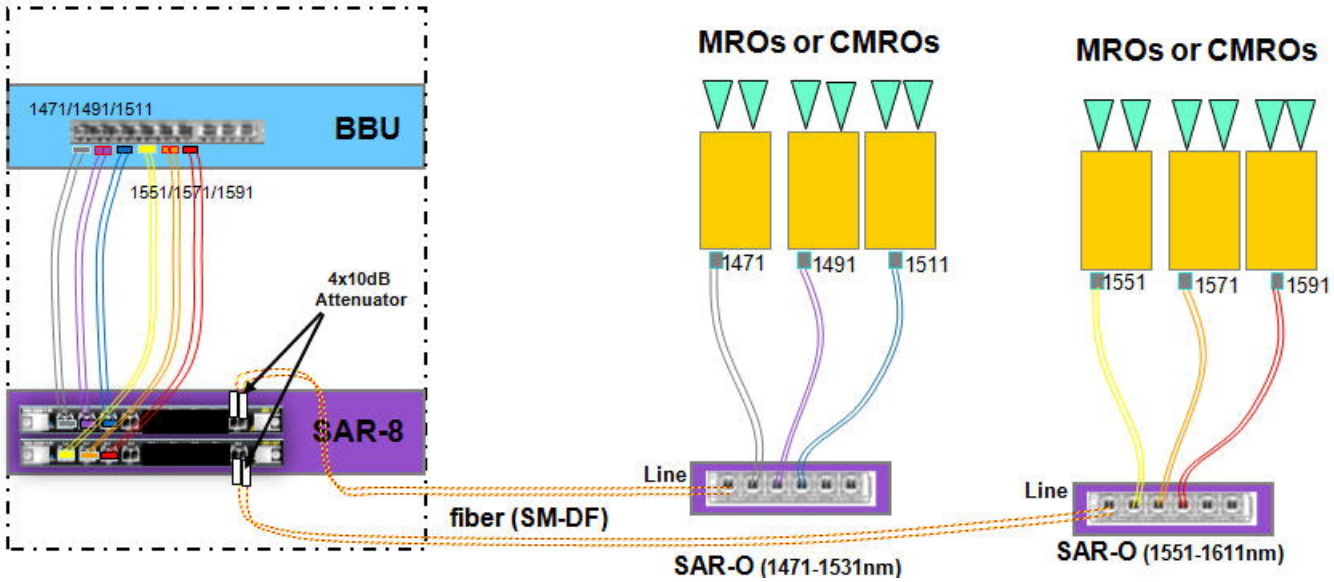

Figure 2-8 Six 9768 CMROs served by two single mode dual fibers with same wavelength

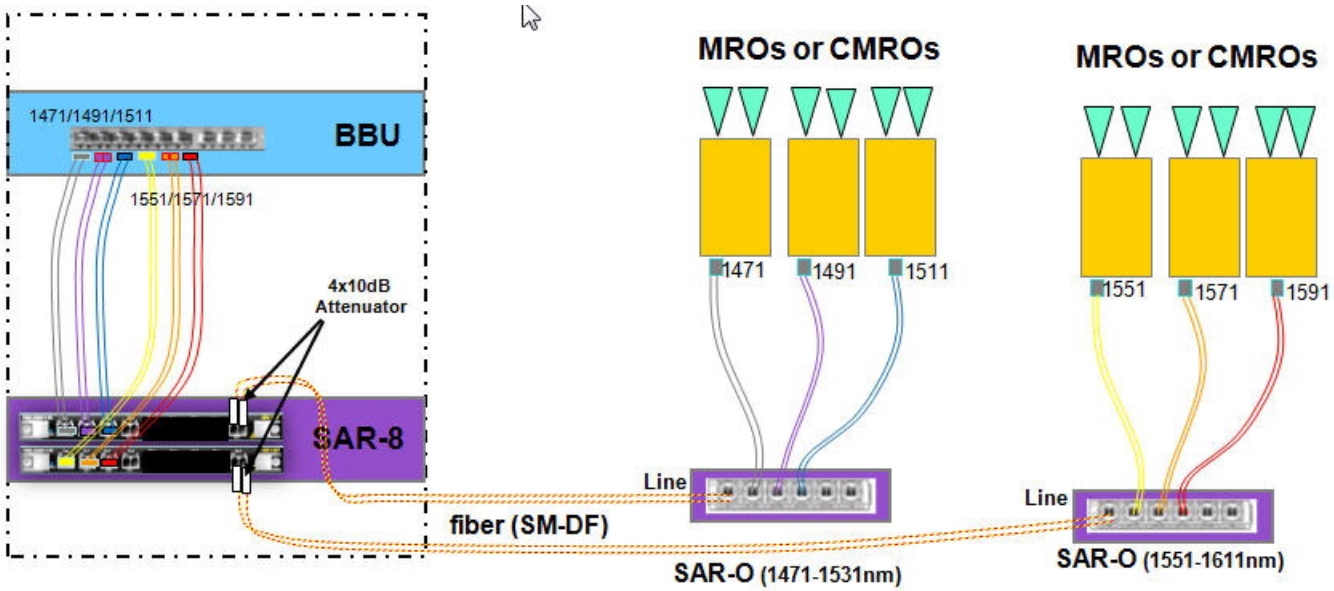

DRAFT

Six 9768 CMROs served by a single mode dual fiber configuration (Daisy-chained 7705 SAR-Os)

This configuration is same as six 9768 CMROs served by two single mode dual fibers, except both 7705 SAR-O units are served by a single mode dual fiber. The first 7705 SAR-O unit's Extension port is connected to the Line port of the second 7705 SAR-O unit. The single mode dual fiber then connects the second 7705 SAR-O unit to a single 7705 SAR-8 unit, equipped with an 8-Channel OADM adapter card to support six 9926 BBU CPRI connections.

Figure 2-9 Six 9768 CMROs served by a single mode dual fiber

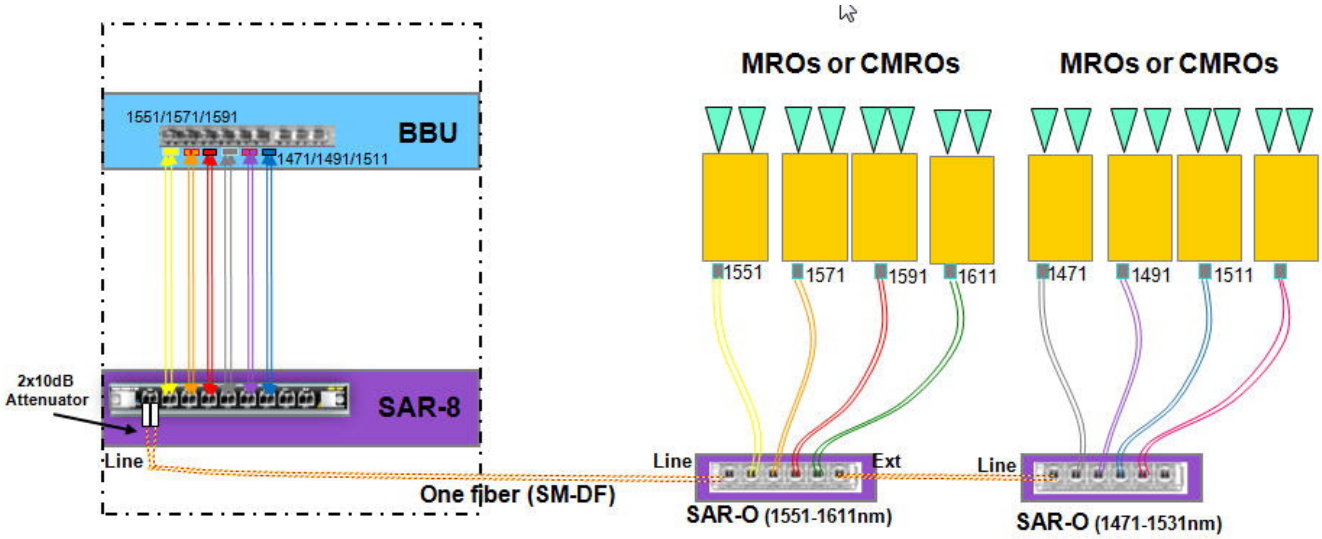

Note: If required, this configuration can be extended to connect a fourth 9768 CMRO on each 7705 SAR-O unit by ordering additional SFPs for the fourth port of each 7705 SAR-O unit. See "SFPs for the fourth 7705 SAR-O connector" (p. 2-14). To support eight CPRI connections, either customer orderable 9926 BBU equipped with eCCM2 controller card (supports up to nine CPRI connections) or multiple 9926 BBUs can be used.

DRAFT

Schematic of 9768 CMRO (AC or DC variant) with 7705 SAR-O, separate mount installation options

The following schematic shows 9768 CMRO installation with a single 7705 SAR-O that applies to "Four 9768 CMROs served by a single mode dual fiber configuration" (p. 2-16).

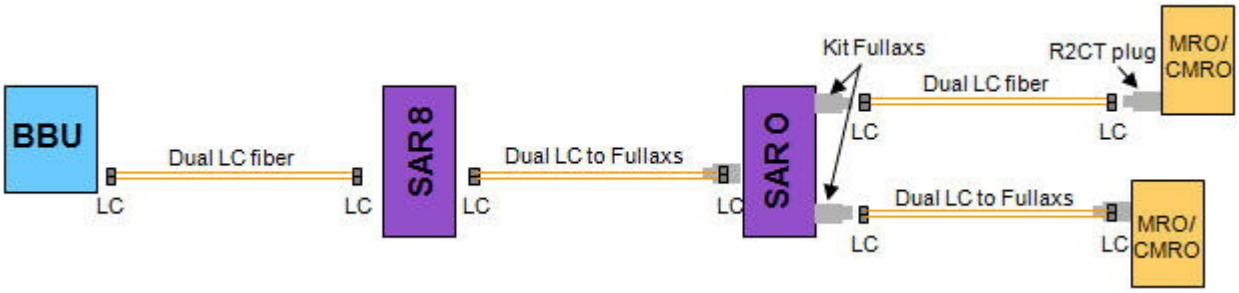

The following schematic shows 9768 CMRO installation with two 7705 SAR-Os that applies to "Six 9768 CMROs served by two single mode dual fibers configuration" (p. 2-17) and "Six 9768 CMROs served by a single mode dual fiber configuration (Daisy-chained 7705 SAR-Os)" (p. 2-19).

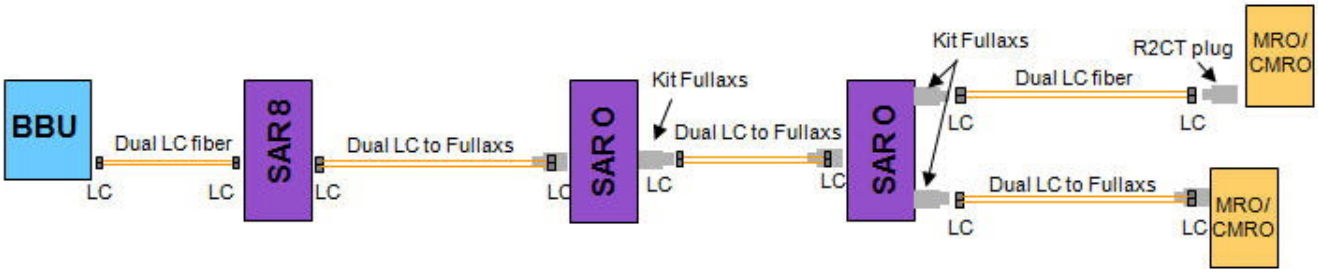

Strand-mount installation option

The strand-mount installation supports mounting one or two DC powered 9768 CMROs, an AC-to-DC converter and RF antennas (attached or external) on a strand cable. The two 9768 CMROs and the 90v AC Coax to -48v DC converter are first assembled onto a saddle-bag bracket on a table prior to mounting the saddle-bag assembly onto a strand. The external RF antennas must be separately mounted onto the strand and connected to the 9768 CMRO. The external RF antennas and the strand-mount kit for external RF antennas must be supplied by the customer.

Note: The strand-mount installation is supported only for the 9768 CMRO DC variant.

DRAFT

The saddle-bag bracket can be used to assemble any two units, as described below:

- 9768 CMRO + 9768 CMRO (90v AC Coax to -48v DC converter is mounted directly on the strand)

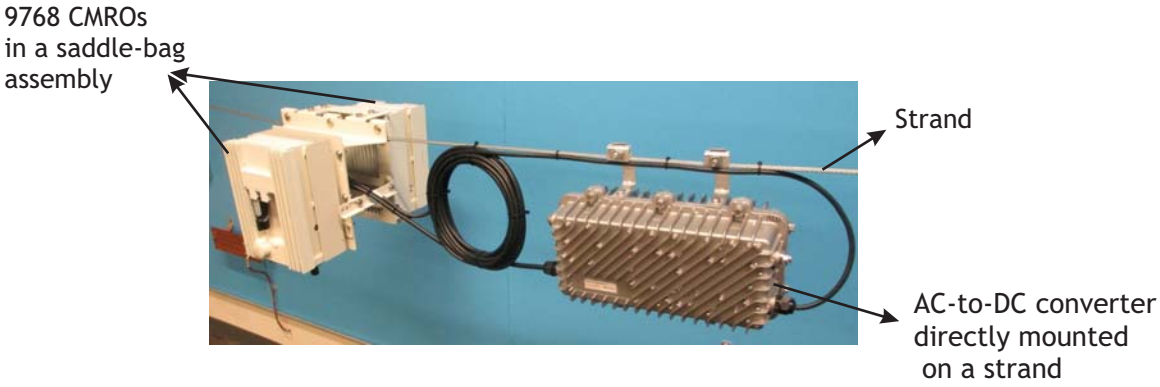

- 9768 CMRO + an 90v AC Coax to -48v DC converter (when only one 9768 CMRO is used in the strand-mount installation)

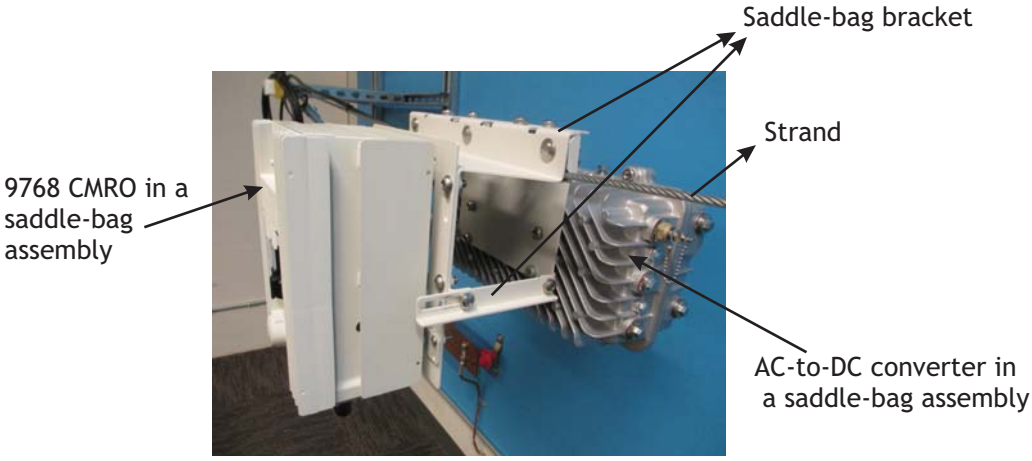

- 9768 CMRO + a counterbalance weight (when only one 9768 CMRO is used in the strand-mount installation and the 90v AC Coax to -48v DC converter is mounted directly on the strand)

Daisy chain installation options

In a daisy chain installation option, up to four 9768 CMROs can be daisy chained together, where they share the same fronthaul port, thus reducing the investment cost needed to connect the 9768 CMROs to the fronthaul network and aggregating the uplink and downlink traffic.

DRAFT

Daisy chaining of 9768 CMRO units is supported only with macro eNodeB BBUs (not with 976x Metro Cells). The following table provides the supported 9768 CMRO daisy chaining configurations for a BBU hardware configuration and CPRI rate:

CPRI rate/BBU HW configuration	**CPRI rate 3**	**CPRI rate 5**	**CPRI rate 7**
eCCM2-HR + bCEM P1.1	Up to four 9768 CMROs can be daisy chained at 5, 10, 15 or 20 MHz carrier bandwidth		
eCCM2 + bCEM P1.1	• Up to four 9768 CMROs can be daisy chained at 5 or 10 MHz carrier bandwidth • Up to two 9768 CMROs can be daisy chained at 15 or 20 MHz carrier bandwidth		Not supported
bCAM2 + bCEM2	Up to four 9768 CMROs can be daisy chained at 5, 10, 15 or 20 MHz carrier bandwidth		

Note: Mixed BBU configurations do not support daisy chaining.

The BBU and all of the RFMs on the daisy chain, including 9768 CMROs, auto-negotiate to use the same CPRI rate when the system starts. CPRI line rates along a daisy chain are uniform and determined by the rate on the first segment. If the BBU wants to change the CPRI line rate for the daisy chain, each RFM starts its master interface only if the slave interface is up and uses only the line rate of the slave interface.

The daisy-chained 9768 CMROs can be co-located or separated by some distance. The actual distance depends upon the BBU, SFP and fiber optic cable configuration used for the daisy chain. Refer to, "Hardware and ancillary items" (p. 2-25) for supported SFPs and fiber optic cable types and lengths.

The 9768 CMRO supports two optical CPRI SFP ports at the back; one for fronthaul ("CPRI 1" port) and the other for daisy chaining ("CPRI 2" port).

DRAFT

Figure 2-10 9768 CMRO daisy chaining installation example

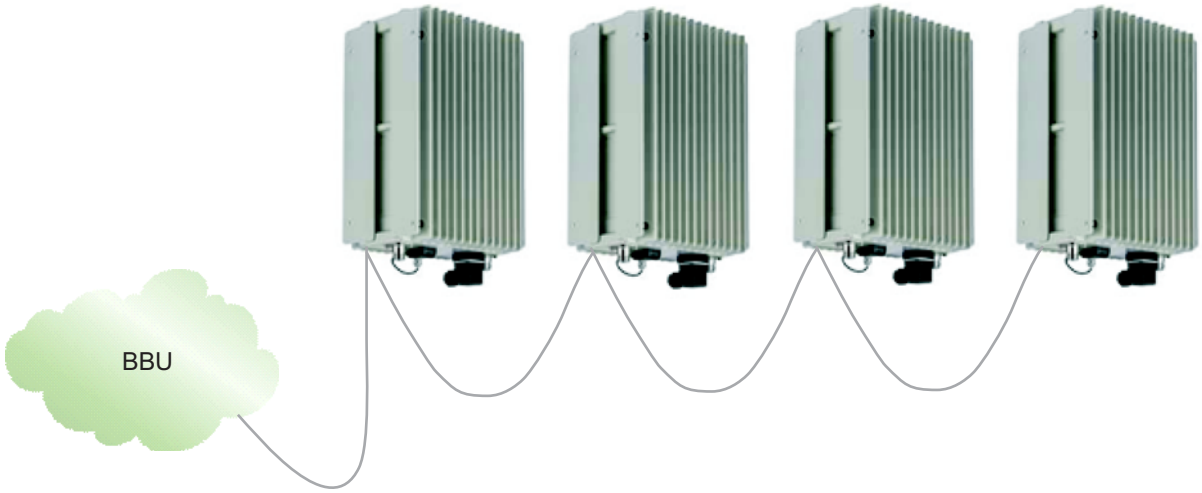

Pair-mount installation options

The 9768 CMROs can be pair-mounted on a double-Metro plate with or without daisy chaining.

Pair-mount installation without daisy chaining

For the pair-mount installation option without daisy chaining, a 9768 CMRO is pair-mounted with another 9768 CMRO, where each 9768 CMRO has its own separate fronthaul connection. The 9768 CMROs have to use different carriers for the pair-mount configuration to be valid.

Pair-mount installation with daisy chaining

When pair-mounted, the 9768 CMROs can either each have a separate fronthaul connection, or they can be daisy chained to share the same fronthaul port, as described in "Daisy chain installation options" (p. 2-21). The 9768 CMROs have to use different carriers for the pair-mount configuration to be valid.

DRAFT

Examples of pair-mount installation

Figure 2-11 Two 9768 CMROs pair-mounted on a pole

Figure 2-12 Two 9768 CMROs pair-mounted on a wall

Co-located installation option

Two 9768 CMROs can be mounted in a co-located configuration, either in the same plane, or one above the other.

If the 9768 CMROs are mounted one above the other, a certain distance between them is required in order to prevent the bottom 9768 CMROs from overheating the top 9768 CMROs. The minimum separation distance between the two 9768 CMROs must be 2 m. If the minimum separation distance is less than 2 m, then an air baffle must be used.

DRAFT

The following table describes the deployment scenarios and whether or not an air baffle is required:

If...	Then...
The minimum separation distance between the two 9768 CMROs is less than 2 m	An air baffle is required. Mount the air baffle between the two 9768 CMROs. A minimum separation distance of 50 cm is required between the two 9768 CMROs to use an air baffle. **Note:** The air baffle is customer supplied.
The minimum separation distance between the 9768 CMROs is 2 m or greater	An air baffle is not required.

Hardware and ancillary items

Overview

The following section lists the Alcatel-Lucent 9768 CMRO base hardware equipment, the installation kits and ancillary items that can be ordered from Alcatel-Lucent.

9768 CMRO base items

The product packaging contains the following base items:

- 9768 CMRO
- 9768 CMRO mounting frame
- 9768 CMRO basic installation kit

Ancillary items

The following tables list the ancillary items that are available for order from Alcatel-Lucent in support of the defined equipment installation and configuration options.

DRAFT

Required installation items

The following table lists the installation items required and available for order from Alcatel-Lucent in support of the equipment installation options. Each item must be ordered separately.

Table 2-11 Pole-mount installation

Item	Description	Use
9768 CMRO base items	9768 CMRO 9768 CMRO mounting frame 9768 CMRO basic installation kit	Mandatory
Tool for metal band	Standard BAND-IT® Banding Tool (CR00169), including operating instructions	Mandatory for pole-mount only Tighten the bracket metal band around the pole
Bracket metal band kit	Stainless steel bands Band buckles (Ear-Lokt)	Mandatory Attach the9768 CMRO or vertical tilt bracket to a pole (diameter 50 to 300 mm) using stainless steel bands.

Table 2-12 Wall-mount installation

Installation kit	Description	Use
9768 CMRO base items	9768 CMRO 9768 CMRO mounting frame 9768 CMRO basic installation kit	Mandatory

Table 2-13 Pair-mount installation on a pole

Installation kit	Description	Use
9768 CMRO base items	9768 CMRO 9768 CMRO mounting frame 9768 CMRO basic installation kit	Mandatory Order two numbers if two 9768 CMROs are pair-mounted.
Tool for metal band	Standard BAND-IT® Banding Tool (CR00169), including operating instructions	Mandatory for pole-mount only Tighten the bracket metal band around the pole
Bracket metal band kit	Stainless steel bands Band buckles (Ear-Lokt)	Mandatory Pole-mount 9768 CMROs in pair-mount installation
Double Metro plate kit	Double Metro plate	Mandatory Pole-mount 9768 CMROs in pair-mount installation

DRAFT

Table 2-14 Pair-mount installation on a wall

Installation kit	Description	Use
9768 CMRO base items	9768 CMRO 9768 CMRO mounting frame 9768 CMRO basic installation kit	Mandatory Order two numbers if two 9768 CMROs are pair-mounted.
Double Metro plate kit	Double Metro plate	Mandatory Wall-mount 9768 CMROs in pair-mount installation

Table 2-15 Strand-mount installation kit

Installation kit	Description	Use
Strand-mount kit	Saddle-bag mounting bracket (for mounting 9768 CMRO, 90v AC Coax to -48v DC converter or counterbalance weight), including 90v AC Coax to -48v DC kit for strand-mount	Mandatory For mounting 9768 CMROs, 90v AC Coax to -48v DC converter and counterbalance weight on to a strand.
Docking stand assembly tool	Facilitates mounting units to saddle bag mounting bracket on the ground prior to mounting the assembly on the strand	Mandatory For assembling 9768 CMROs, 90v AC Coax to -48v DC and counterbalance weight on to the saddle-bag mounting bracket.
Counterbalance weight	Counterbalance weight for the 9768 CMRO in saddle-bag mounting bracket	Optional Applicable if only one 9768 CMRO is used in the strand-mount installation and the 90v AC Coax to -48v DC is directly strand-mounted.
90v AC Coax to -48v DC	Converts the AC supply from the 90v AC Coax power to -48v DC input for the 9768 CMRO	Mandatory To be supplied by the customer
External RF antenna strand-mount kit	Strand-mount kit for external RF antenna	Optional Applicable only if customer supplied external RF antennas are used. To be supplied by the customer or by the customer's strand-mount provider.

7705 SAR-O installation kit

For 7705 SAR-O installation kit, see "7705 SAR-O hardware overview and ancillary" (p. 2-9).

DRAFT

Power

Item	Description	Use
Cable assembly (AC) for NAR market	3x16AWG Power connector assembled with the power cable. Available in four lengths: 2m, 4.5m, 9m and 12m	Mandatory for 9768 CMRO module with AC power Applicable to NAR market only
Cable assembly (DC) for NAR market	3x16AWG Power connector assembled with the power cable. Available in four lengths: 2m, 4.5m, 9m and 12m	Required for 9768 CMRO module with DC power Applicable to NAR market only
Power connector (AC) for non-NAR market	AC power connector	Mandatory for 9768 CMRO module with AC power Applicable to non-NAR market only
Power connector (DC) for non-NAR market	DC power connector	Mandatory for 9768 CMRO module with DC power Applicable to non-NAR market only
Power cable for non-NAR market	Power cable IN/OUT 3x1,5mm² Available in 100m roll or per meter	Mandatory for 9768 CMRO module with both AC or DC power Applicable to non-NAR market only

Grounding cable

Item	Description	Use
Ground cable for NAR market	Ground cable Y/G, NAR 8AWG LSZH Available in any length (in meters)	Mandatory Applicable to NAR market only
Ground cable for non-NAR market	Ground cable Y/G 10mm² in 100m roll	Mandatory Applicable to non-NAR market only

SFP modules

Item	Description	Use
SFP module	SFP CPRI Rate 3-7 - 1310nm - SMDF (1,4 km)	Optical fronthaul, Daisy chaining
SFP module	SFP CPRI Rate 3-7 - 1310nm - SMDF (10 km)	Optical fronthaul, Daisy chaining

DRAFT

OCTIS connector

Item	Description	Use
OCTIS plug kit for SFP transceiver	OCTIS connector	Mandatory One each for fronthaul and daisy chaining ports Protects SFP and cabling from environmental damage.

External RF antenna

Item	Description	Use
External RF antenna	External RF antenna for the 9768 CMRO.	Mandatory To be supplied by the customer.

Fiber optic cable for fronthaul

Item	Description	Use
Fiber Optic cable	SMDF LC-LC 2SM 1m	Mandatory Single mode fiber duplex. 67mm/250mm Breakout, Outer diameter: 5-7mm, OFNR-LS Use for Single Mode link (select cable length)
Fiber Optic cable	SMDF LC-LC 2SM 2.5m	
Fiber Optic cable	SMDF LC-LC 2SM 5m	
Fiber Optic cable	SMDF LC-LC 2SM 15m	
Fiber Optic cable	SMDF LC-LC 2SM 30m	
Fiber Optic cable	SMDF LC-LC 2SM 50m	
Fiber Optic cable	SMDF LC-LC 2SM 70m	
Fiber Optic cable	SMDF LC-LC 2SM 85m	
Fiber Optic cable	SMDF LC-LC 2SM 100m	
Fiber Optic cable	SMDF LC-LC 2SM 150m	
Fiber Optic cable	SMDF LC-LC 2SM 200m	
Fiber Optic cable	SMDF LC-LC 2SM 250m	
Fiber Optic cable	SMDF LC-LC 2SM 300m	
Fiber Optic cable	SMDF LC-LC 2SM 300m	

DRAFT

Fiber optic cable for daisy chaining

Item	Description	Use
Fiber Optic cable	SMDF LC-LC 2SM 1m	Optional Single mode fiber duplex. 67mm/67mm Breakout, Outer diameter: 5-7mm, OFNR-LS Use for Single Mode link (select cable length)
Fiber Optic cable	SMDF LC-LC 2SM 2.5m	
Fiber Optic cable	SMDF LC-LC 2SM 5m	
Fiber Optic cable	SMDF LC-LC 2SM 15m	
Fiber Optic cable	SMDF LC-LC 2SM 30m	
Fiber Optic cable	SMDF LC-LC 2SM 50m	
Fiber Optic cable	SMDF LC-LC 2SM 70m	
Fiber Optic cable	SMDF LC-LC 2SM 85m	
Fiber Optic cable	SMDF LC-LC 2SM 100m	
Fiber Optic cable	SMDF LC-LC 2SM 150m	
Fiber Optic cable	SMDF LC-LC 2SM 200m	
Fiber Optic cable	SMDF LC-LC 2SM 250m	
Fiber Optic cable	SMDF LC-LC 2SM 300m	
Fiber Optic cable	SMDF LC-LC 2SM 300m	

Solar Shield

Item	Description	Use
Solar Shield	Solar Shield for 9768 CMRO	Mandatory unless the 9768 CMRO is installed indoors or protected in an enclosure.

3 Site selection

Overview

Purpose

This chapter describes basic site preparation requirements for Alcatel-Lucent 9768 Compact Metro Radio Outdoor installation

Contents

Environmental and mechanical specifications	3-2
Spectrum analysis of RF neighborhood	3-3
Site requirements	3-4
Site power requirements (AC)	3-5
Site power requirements (DC)	3-7
9768 CMRO power requirements	3-9
Grounding and lightning protection	3-10
9768 CMRO product grounding	3-11
General antenna cable requirements	3-13
Site requirements for link to baseband processing unit	3-14
Site requirements for a wall mount installation	3-14
Site requirements for a pole mount installation	3-14
Site requirements for strand-mount installation	3-15

DRAFT

Environmental and mechanical specifications

Environmental and mechanical specifications

Temperature range:	
Normal operation	-40°C to +55°C
Cold start-up	-40°C Temperature must remain higher than -40 °F (-40 °C) at all times.
Humidity:	
Condensing	5% to 100%
Altitude:	
Altitude range	1798 m (5900 ft) above sea level, solar load not greater than 1120 W/m2, normal operation against sustained temperatures of up to 131°F (55 °C) is assured.
Vibration:	
North American Region (NAR)	GR-63-CORE Sections 4.4.4 & 5.4.2 GR-487-CORE Section 3.35
European Union (EU)	ETS 300-019-1.4 class 4.1E
Earthquake	GR-63-CORE, Earthquake Zone 4: Sections 4.41 & 5.4.1
Enclosure rating:	
Ingress protection	NEMA Type 4 IEC 60529 – IP65
Moisture	GR-487, Section 3.33
Dust and water ingress	IEC 60529, Section 5.2 (IP65)
Wind resistance	GR-487, Section 3.30

Infestation and debris

The operator of the 9768 CMRO has the responsibility to keep animal infestation and other impediments, such as birds nests, from wedging into and blocking the cooling fins of the 9768 CMRO enclosure.

DRAFT

Security

The typical deployment of an 9768 CMRO is intended to be up out of human reach. Nevertheless and especially where this elevation is not achievable, some form of watchfulness and enforcement to prevent tampering is advised. These considerations may affect product placement.

Similarly advised is a pre-installation and thereafter occasional spectrum analysis, which can detect rogue or incidental threats of RF interference that may degrade the 9768 CMRO's communications.

Spectrum analysis of RF neighborhood

Interference

The 9768 CMRO complies with FCC Part 15 Subpart A Class B for immunity to radiated interference. However, deployments in its unregulated frequency band can be susceptible to interference from neighboring devices of another carrier or a rogue who is intent on disrupting the service that 9768 CMROs provide.

Typically, the sector exists within the physical span and secure control of the management of the venue, but this extent of isolation may not guarantee unimpeded secure communications. Spectrum analysis during site selection and repeated at intervals during the deployed service of the 9768 CMRO is recommended.

Another consideration is the extent to which non-radio sources may emit scattered RF waves that enter the band. Some examples are

- diodes in nearby electronic equipment such as scoreboards, video screens, or flight tables
- fluorescent lighting.

DRAFT

Site requirements

Device placement

Before installing the 9768 CMRO, you should perform a site survey to determine the optimum use of the equipment and to maximize range, coverage, and network performance.

The 9768 CMRO is designed to be mounted on poles or walls in a central location within the public spaces. Clear or open areas (where structures, trees, or hills do not obstruct radio signals to and from the equipment) will provide better performance than closed or filled areas.

General requirements

The following general site requirements must be met before the installation of the 9768 CMRO can begin:

- Adequate clearance must be provided for service access
- Power service must be installed
- Back haul facilities must be installed
- Grounding electrode system must be installed
- The environment must comply with stated environment requirements
- Mounting bracket holes must be drilled
- Any necessary cable support structure must be installed
- Where local regulations dictate, cable conduits must be prepared.

Structural requirements

Various building materials and construction methods dictate that equipment must be fastened to a wall/pole with appropriate mounting hardware. It is the responsibility of the customer to provide any necessary support material and structures and ensure that the installation support structure is adequate and compliant with ICC IBC (2012): International Building Code, and all other national and local codes

DRAFT

Site power requirements (AC)

Purpose

This section describes the power and grounding requirements that must be considered when planning site facilities for Alcatel-Lucent installed equipment and products.

General requirements

All power and grounding system wiring, short-circuit (over-current) protection and surge protection devices must be installed by the appropriately licensed personnel. Installation must be performed in accordance with national and local electrical codes, for example:

- In the United States:

  National Electrical Code, NFPA 70
- In Canada:

  Canadian Electrical Code, part I, CSA C22.1
- In other countries:

  International Electrotechnical Commission (IEC) 60364, parts 1 through 7

In addition, adherence to all additional requirements mandated by the “country of use” is the customer's responsibility.

The appropriate power supply ground connections and site equipment ground connections must be in place before commercial AC power service can be connected to the equipment installed at the site.

Customer AC power supply

The equipment installed on site must be supported with a customer supplied AC power service. The AC connection point should be easily accessible by the service team and be marked as the disconnect device of the equipment.

Note:

- The service board (or load center), circuit breakers and surge protectors devices are not supplied with the product. They must be ordered and installed as part of site preparation by the customer.
- All wiring (including grounding) and over-current protection must be installed at the service panel by suitably trained and licensed personnel and in accordance with the national and local electrical codes.
- An appropriate earth ground connection is required before commercial power service can be connected to any equipment at the site.

In the United States and Canada, the branch circuit breaker shall be installed in accordance with the National Electrical Code, or the Canadian Electrical Code, Part I.

DRAFT

The branch circuit breaker should always be situated upstream of the equipment and must be a double pole 20A Type C disconnect device.

Line surge protection

A surge protection device is not supplied with the product. It must be ordered and installed as part of site preparation by the customer.

The equipment can be connected to an AC mains distribution system classified as CAT II (equipment dedicated for connection to the mains distributed within a building). If the category of the AC mains is higher than CAT II (III or IV), then upstream surge protection must be installed by the customer to reduce the voltage range of transients in accordance with CAT II.

Power source	Over-voltage category
Equipment connected to building mains	CAT II
Equipment connected directly to low voltage mains	CAT III or CAT IV

The installation wiring for all outdoor AC units must be provided with a Listed/Approved surge protection device. In the United States and Canada the installation must be in accordance with the National Electrical Code or the Canadian Electrical Code, Part I.

Power junction box

For outdoor installations, in countries where local regulations dictate, a customer-supplied power junction box, or a mating plug and receptacle, may need to be installed as part of site preparation. As part of site preparation, the customer must provide the appropriate junction box and associated fittings.

In the United States and Canada, outdoor cord pendants, if used, shall comply with NEC Article 400 or Canadian Electrical Code, Part I Rule 4-012

Conduit requirements

For outdoor installations, in countries where local regulations dictate, the power cables are required to be routed to the equipment within rigid metal conduit (RMC) or liquid-tight flexible metal (LTFMC) conduit. As part of site preparation, the customer must provide the metal conduit and associated fittings for cable routes and connecting conduit to the outdoor equipment.

For the US and Canada market alternatively allowable outdoor armored cable described in the National Electrical Code and Canadian Electrical Code, Part I, may be used without a conduit.

DRAFT

Examples:

- Type MC cable, such as Hybriflex cable
- Outdoor tray cable Type TC-ER

Site power requirements (DC)

Purpose

This section describes the power and grounding requirements that must be considered when planning site facilities for Alcatel-Lucent installed equipment and products.

General requirements

All power and grounding system wiring, short-circuit (over-current) protection and surge protection devices must be installed by the appropriately licensed personnel. Installation must be performed in accordance with national and local electrical codes, for example:

- In the United States:

  United States National Fire Protection Association (NFPA) 70 and United States National Electrical Code (NEC)
- In Canada:

  Canadian Electrical Code, part I, CSA C22.1
- In other countries:

  International Electrotechnical Commission (IEC) 60364, parts 1 through 7

In addition, adherence to all additional requirements mandated by the “country of use” is the customer's responsibility.

The appropriate power supply ground connections and site equipment ground connections must be in place before commercial AC power service can be connected to the equipment installed at the site.

Customer DC power supply

The equipment installed on site must be supported with a customer supplied nominal -48V DC power service. The DC connection point should be easily accessible by the service team and be marked as the disconnect device of the equipment.

DRAFT

DRAFT

Note:

- The service board (or load center), circuit breakers and surge protectors devices are not supplied with the product. They must be ordered and installed as part of site preparation by the customer.
- All wiring (including grounding) and over-current protection must be installed at the service panel by suitably trained and licensed personnel and in accordance with the national and local electrical codes.
- An appropriate earth ground connection is required before commercial power service can be connected to any equipment at the site.

The branch circuit breaker should always be situated upstream of the equipment and must be a double pole 20A Type C disconnect device.

Line surge protection

A surge protection device is not supplied with the product. It must be ordered and installed as part of site preparation by the customer.

Power junction box

For outdoor installations, in countries where local regulations dictate, a customer supplied power junction box may need to be installed as part of site preparation. As part of site preparation, the customer must provide the appropriate junction box and associated fittings.

In the United States and Canada, outdoor cord pendants, if used, shall comply with NEC Article 400 or Canadian Electrical Code, Part I Rule 4-012.

Conduit requirements

For outdoor installations, in countries where local regulations dictate, the power cables are required to be routed to the equipment within rigid metal conduit (RMC) or liquid-tight flexible metal (LTFMC) conduit. As part of site preparation, the customer must provide the metal conduit and associated fittings for cable routes and connecting conduit to the outdoor equipment.

For the US and Canada market alternatively allowable outdoor armored cable described in the National Electrical Code and Canadian Electrical Code, Part I, may be used without a conduit.

Examples:

- Type MC cable, such as Hybriflex cable
- Outdoor tray cable Type TC-ER

DRAFT

DRAFT

9768 CMRO power requirements

AC required power source

The 9768 CMRO requires a single phase, three-wire power source in the 95 to 265 Volt range (measured at the input), line to neutral, at a frequency of 47 Hz to 63 Hz. To avoid service interruptions from power outages, the customer can set up an uninterruptible power supply (UPS).

The AC junction box equipped with a receptacle that is suitable for the particular site. For example, if located in an uncontrolled environment subject to the weather elements, a suitable weatherized receptacle outlet must be installed.

A mating plug must be provided by the customer to terminate to the ALU provided AC power cord.

DC required power source

-48 V DC power supply that operates over the voltage range from -40 V DC to -57 V DC.

The DC power is surge protected internally, and conforms to GR-1089, Issue 6, Appendix B for Port Type 8a.

Typical power consumption

Fully configured and operating at maximum levels, the product consumes 100W. Typical power consumption is 85W, 1 Amp at maximum draw.

Surge protection devices

For cases where the CMRO is connected to power sources susceptible to surges exceeding the first-level surge (that is, outdoor environments), additional external surge protection devices are required and must be provided by the customer.

Power ancillary items

The following Alcatel-Lucent power related ancillary items must be used.

Table 3-1 Power materials

Item	Description	Use
Power connector (AC)	AC power connector	Required for 9768 CMRO module with AC power
Power cable	Power cable IN/OUT 3G1,5mm², 100m roll or multiples of 1m length (as needed)	Required for both AC and DC powered 9768 CMRO module
Power connector (DC)	DC power connector	DC power connector

DRAFT

DRAFT

Grounding and lightning protection

Overview

The primary goal of an earthing system is to assure personnel safety and protection of installations against damage. Two important phenomena are lightning and power system faults. These can cause circulation of large currents, which may create hazardous voltages in the installation.

- For lightning, the task of the earthing system is to provide a path to the soil for dangerous currents, while maintaining potential differences between any two points of an installation as low as possible.
- For power system faults, it provides a safe path for fault currents, while also maintaining potential differences between any two points of an installation as low as possible.

Codes and standards

Regulatory grounding codes and standards may differ from region to region and country to country. The grounding/bonding of the installation site and Alcatel-Lucent 9764 Metro Cell Outdoor must follow national and/or local regulatory codes and standards in countries and localities where these exist.

Examples of these regulatory codes and standards are:

- National Electric Code (NFPA 70), USA
- Canadian Electrical Code, Part I (CSA C22.1)
- BS 7671 (UK IEE Wiring Regulations, BS 7671
- VDE 0100, Germany
- International Electrotechnical Commission's international standard, 60364

Grounding requirements

The Alcatel-Lucent 9764 Metro Cell Outdoor can be susceptible to lightning surges due to its association with elevated installation locations. It is therefore imperative that the equipment and installation site be properly grounded to a reliable and effective grounding electrode system such that a low impedance path to earth is provided.

For Alcatel-Lucent 9764 Metro Cell Outdoor installations the following grounding system types are supported:

- TN

  In a TN earthing system, one of the points in the generator or transformer is connected with earth, usually the star point in a three-phase system. The body of the electrical device is connected with earth via this earth connection at the transformer.

- TT

DRAFT

DRAFT

In a TT earthing system, the protective earth connection of the consumer is provided by a local connection to earth, independent of any earth connection at the generator.

Important! Where uncertainty exists around the reliability and/or effectiveness of the main grounding system contact Alcatel-Lucent Technical Support or the appropriate electrical inspection authority.

In addition the following document can also be used as a general reference for installation site grounding requirements, *Grounding and Lightning Protection Guidelines for Wireless System Cell Sites,* 401-200-115.

Surge protection requirements

Having a good ground alone is not enough to minimize damage due to energy surges. Commercial power and data facilities are susceptible to lightning surges, switching transients of power and switching of circuit breakers in the power system under fault conditions. Therefore power and data facilities must be also be properly protected.

A surge protection device capable of discharging the surge waveforms as defined in *IEEE C62.41 (1991), Recommended Practice on Surge Voltage in Low-Voltage AC Power Circuits, for Location Category "C3" and "High System Exposure"* must be installed in the power panel board or load center supplying power to the installation site and must be connected directly to the grounding electrode system. The power panel board or load center, circuit breakers and surge protector are not supplied with the product. They must be ordered and installed as part of site preparation by the customer.

It is also strongly recommended that surge protection devices are installed on electrical data facilities cabling in order to protect against electrical surges that may potentially cause damage to equipment and the cables if they were not adequately protected.

9768 CMRO product grounding

Overview

This section details the grounding ancillary items and grounding connection points on the 9768 CMRO.

Grounding ancillary items

The following grounding related ancillary items can be ordered from Alcatel-Lucent.

Table 3-2 Grounding materials

Item	Description
Grounding cable	Green and yellow insulation (100 meter roll)

DRAFT

DRAFT

Table 3-2 Grounding materials (continued)

Item	Description
Basic installation kit	Cable lugs, screws and washers

Note: Where grounding materials are locally supplied it is important that all grounding system material (cable, connectors, buses, etc.) are of high quality, that resist deterioration and require little or no maintenance.

9768 CMRO grounding point

The following figure shows the grounding point on the 9768 CMRO. The ground cable can be connected directly to the 9768 CMRO via a double hole grounding lug crimped onto the cable. M5 screws are used to attach the ground cable to the grounding point on the 9768 CMRO.

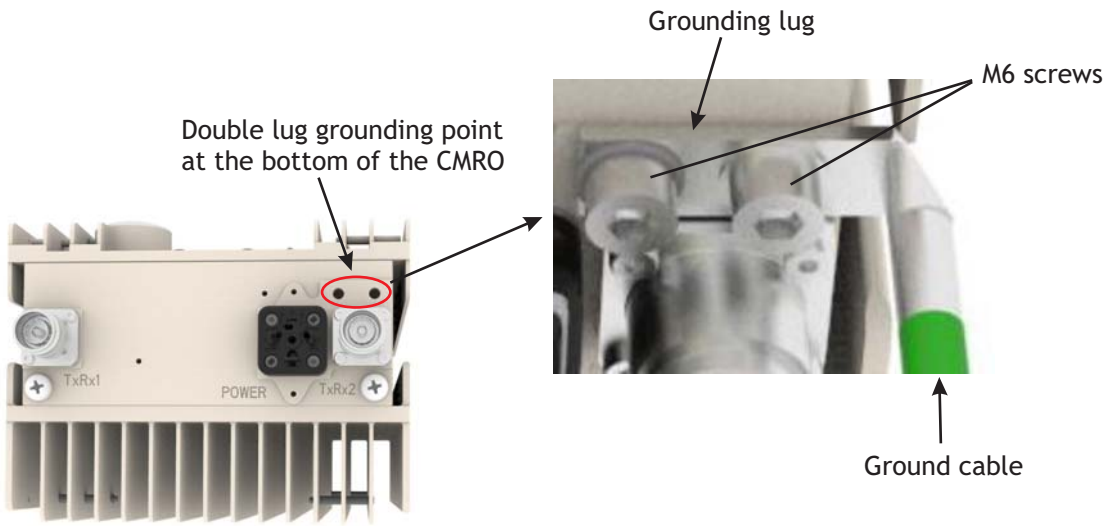

DRAFT

DRAFT

General antenna cable requirements

General requirements

The appropriate antenna type, cable length and type, and number of antenna jumper cables should be available at the site for the start of the installation.

The following are general antenna requirements:

- The appropriate Alcatel-Lucent recommended antenna should be used.
- The appropriate Alcatel-Lucent recommended antenna cables should be used.
- All antenna cable runs must be appropriately supported in accordance with the connector and cable manufacturer's instructions.
- Grounding of the antenna feeder cable outer shield must be performed in accordance with the ground kit manufacturer's instructions.
- All antenna cable connectors must be at least IP67 rated (IP67 rating requirement, as defined by IEC 60529, calls for total protection against dust and protection against submersion in water).
- Antenna and cable sweeps must be performed prior to the start of the installation.

Antenna installation

Antenna installations shall be performed in accordance with all applicable manufacturer's recommendations, and national laws and regulations.

To ensure correct antenna installation, all necessary calculations and/or field measurements shall be evaluated for compliance with applicable national laws or regulations regarding exposure to electromagnetic fields. The antenna manufacturer or supplier shall deliver all technical data necessary to perform this compliance evaluation (e.g., antenna gain pattern, antenna dimensions, etc.). Information on the methodology and results of the compliance evaluation shall be available for inspection by officials of the governing authorities.

Antenna cable grounding

Grounding of the antenna cable outer shield must be performed in accordance with the ground kit manufacturer's instructions and as outlined in *Grounding and Lightning Protection Guidelines for Wireless System Cell Sites,* 401-200-115.

DRAFT

DRAFT

Site requirements for link to baseband processing unit

Distance from 9768 CMRO

The uplink and downlink to the 9768 CMRO are supported for fiber optic cable runs of not greater than

- 300 m (984 ft) incase of multi-mode
- 15 km (32,810 ft) incase of single-mode

The cable used must support the CPRI Line Bit Rate Option 3.

Site requirements for a wall mount installation

Bracket

The wall-mount bracket that the 9768 CMRO product includes provides sufficient standoff to dissipate heat and ensure thermal protection of the radio components and the facility wall or façade.

Weight bearing

The wall or façade and any nonstandard fasteners must be able to sustain at least the 21-lb (9.53-kg) radio and its 5-lb (2.27-kg) wall-mount hardware, for a total weight of 26 lb (11.8 kg).

A safety factor of 4 must be observed.

Site requirements for a pole mount installation

Overview

The 9768 CMRO can be easily mounted onto a wooden or metal pole.

The pole-mount bracket to use depends on the diameter of the pole. However, any bracket used for pole mounting must attach to the pole *and to the wall-mount bracket* of the 9768 CMRO. The bracket metal band pole-mount kit meets this requirement and is available to accommodate various diameters (diameter 50 to 300 mm).

The following pole-mount installations are supported:

- The 9768 CMRO banded onto a pole (without the tilt option).

  The 9768 CMRO mounting bracket and pole band installation kit is used.
- • The 9768 CMRO attached to the vertical tilt bracket. Vertical tilt bracket is banded onto a pole.

DRAFT

DRAFT

The vertical tilt bracket, 9768 CMRO mounting bracket and pole band installation kit is used.

Requirements

Attention: The 9768 CMRO must be mounted with the appropriate mounting hardware suitable for the various supporting structures, building materials and construction methods. Following a site survey, it is the responsibility of the customer to ensure that:

- The installation support structure is adequate and compliant with ICC IBC (2012): International Building Code, and all other national and local codes
- The appropriate mounting hardware and any necessary recommended supporting anchor fixings are used.

Site requirements for strand-mount installation

Overview

The strand-mount installation supports mounting one or two DC powered 9768 CMROs, an AC-to-DC converter and RF antennas (attached or external) on a strand cable. The two 9768 CMROs and the 90v AC Coax to -48v DC converter are first assembled onto a saddle-bag bracket on a table prior to mounting the saddle-bag assembly onto a strand. The external RF antennas must be separately mounted onto the strand and connected to the 9768 CMRO. The external RF antennas and the strand-mount kit for external RF antennas must be supplied by the customer.

Note: The strand-mount installation is supported only for the 9768 CMRO DC variant.

Requirements

To strand-mount the 9768 CMRO DC variant, the following installation items are required depending on the installation options:

- Strand-mount kit: Saddle-bag mounting bracket (for mounting 9768 CMRO, 90v AC Coax to -48v DC converter or counterbalance weight), including 90v AC Coax to -48v DC kit for strand-mount (Mandatory).
- Docking stand and assembly tool: Facilitates mounting units to saddle bag mounting bracket on the ground prior to mounting the assembly on the strand (Mandatory).
- Counterbalance weight: Counterbalance weight for the 9768 CMRO in saddle-bag mounting bracket (Optional)
- 90v AC Coax to -48v DC: Converts the AC supply from the 90v AC Coax power to -48v DC input for the 9768 CMRO (Mandatory).
- External RF antenna strand-mount kit: strand-mount kit for external RF antenna (Optional).

DRAFT

Prepare site for the strand-mount installation

The following are required to prepare a site for mounting the Alcatel-Lucent 9768 Compact Metro Radio Outdoor onto a strand cable:

- A site survey has been conducted and a location for the device has been selected
- Install backhaul cable runs
- Install power cable runs
- Install RF runs (if antenna connection to remote site)
- Ensure site specific fixing materials are available for strand cable mounting the 9768 CMRO
- Ensure strand cable is adequately grounded

DRAFT

Appendix A: Site survey checklists

Overview

Purpose

In the following checklists, *venue* refers to the general area, such as a stadium, enterprise campus, or airport terminal, at which the equipment will be located, and *specific site* refers to the exact position at which the equipment will be installed in that venue.

Contents

SS-1 Venue survey checklist	A-1
SS-2 Site survey general checklist	A-3
SS-3 Site survey access checklist	A-6
SS-4 Site survey conclusion	A-7

SS-1 Venue survey checklist

Venue address

Venue

Name _____

Street address _____

City, State _____

DRAFT

Venue details

The following items must be completed prior to the installation of site equipment. Circle the correct letter for the corresponding item descriptions.

Item #	Description	Yes (Y)	No (N)	N/A	Comments
1.	The altitude of the venue relative to sea level is between −197 ft and +5900 ft.	Y	N	N/A	
2.	Ambient temperatures at the venue are expected to remain above −40 °F (-40 °C) and below 131°F (55 °C).	Y	N	N/A	
3.	Temperature swings at the venue are expected to be always less than 86 °F (30 °C).	Y	N	N/A	
4.	Humidity at the venue is expected to be always 5% or greater.	Y	N	N/A	
5.	RF spectrum analysis has been performed in the venue at various times of day on various days of the week and has shown no activity that is likely to cause interference with the transmission or reception of the Metro Cells.	Y	N	N/A	
6.	The power factor of 0.92 meets the approval of the company that supplies power to the venue.	Y	N	N/A	
7.	Dust at the venue is expected to be below the limit for a NEMA Type 4 enclosure.	Y	N	N/A	
8.	Corrosive salt fog at the venue is expected to be below the limit for a NEMA Type 4 enclosure.	Y	N	N/A	

Notes:

1. Completed by: _____
2. Date: _____

DRAFT

SS-2 Site survey general checklist

Name, address and location

Specific site

Site name: _____

Site code: _____

GPS Location: _____

Latitude: _____

Longitude: _____

Altitude: _____

Elevation: _____

Accuracy: _____

Type of site

The following items must be completed prior to the installation of site equipment. Circle the correct letter for the corresponding item descriptions.

Item #	Type of site	Yes (Y)	No (N)	N/A	Height
1.	Indoor / stadium	Y	N	N/A	
2.	Outdoor pole	Y	N	N/A	
3.	Outdoor building façade	Y	N	N/A	
4.`	Outdoor short post	Y	N	N/A	

Notes:

1. Completed by: _____
2. Date: _____

Site environment

The following items must be completed prior to the installation of site equipment. Circle the correct letter for the corresponding item descriptions.

DRAFT

Item #	Site environment	Yes (Y)	No (N)	N/A	Comments
1.	Wind-driven rain at the specific site is expected to be beneath the limit for a NEMAType 4 enclosure.	Y	N	N/A	
2.	The minimum distance between the installed equipment and the general public conforms with that specified in the“ Product safety and RF exposure” section of the Product Conformance Appendix	Y	N	N/A	
3.	The mounting location is large enough to accommodate the Metro Cell with its mounting bracket(s).	Y	N	N/A	

Notes:

1. Completed by: _____
2. Date: _____

Existing equipment type

The following items must be completed prior to the installation of site equipment. Circle the correct letter for the corresponding item descriptions.

Item #	Equipment type	Yes (Y)	No (N)	N/A	Comments
1.	Metro Cell	Y	N	N/A	
2.	7705 SAR-W	Y	N	N/A	
3.	Other	Y	N	N/A	

Notes:

1. Completed by: _____
2. Date: _____

DRAFT

Existing power type

The following items must be completed prior to the installation of site equipment. Circle the correct letter for the corresponding item descriptions.

Item #	Power	Yes (Y)	No (N)	N/A	Comments
1.	AC	Y	N	N/A	
1(a).	AC power voltage is: 110 V or 220 V nominal	Y	N	N/A	
1(b).	AC power frequency range: from 47 Hz to 63 Hz	Y	N	N/A	
2.	DC	Y	N	N/A	
2(a).	DC power voltage is: -48 VDC	Y	N	N/A	
3.	Battery	Y	N	N/A	

Notes:

1. Completed by: _____
2. Date: _____

Existing transmission type

The following items must be completed prior to the installation of site equipment. Circle the correct letter for the corresponding item descriptions.

Item #	Transmission type	Yes (Y)	No (N)	N/A	Comments
1.	IP/MPLS	Y	N	N/A	
2.	xDSL	Y	N	N/A	
3.	GPON	Y	N	N/A	
4.	WiFi	Y	N	N/A	
5.	Wireless (MPR, etc.)	Y	N	N/A	

Notes:

1. Completed by: _____
2. Date: _____

DRAFT

SS-3 Site survey access checklist

Persons to contact

Responsible for site	Name: Phone: Fax: Email:	
Necessary Authorization	Name: Phone: Fax: Email:	
Subcontractor	Name: Phone: Fax: Email:	
Other persons	Name: Phone: Fax: Email:	

Notes:

1. Completed by: _____
2. Date: _____

Lock and key information

Any locked boxes	Y	N	N/A	Key provided by	Name: Phone: Fax: Email:	

Notes:

1. Completed by: _____
2. Date: _____

DRAFT

Site location access

Ladder required	Y	N	N/A	Height of ladder	
Crane required	Y	N	N/A	Height of crane	
Parking available	Y	N	N/A	Distance to site	
Bucket truck required	Y	N	N/A	Height	

Notes:

1. Completed by: _____
2. Date: _____

SS-4 Site survey conclusion

Site acceptance

OK	
OK, action required	
NOK	

Action items

	Severity			Description
	Blocking	Major	Minor	
1				
2				
3				
4				

Resolution

	Date	Representative		Representative		Description
		Name	Initials	Name	Initials	

DRAFT

1						
2						
3						
4						

Survey approval

Date of site survey:

Name	Signature

DRAFT

DRAFT

Appendix B: Site preparation checklists

Overview

Purpose

This section is for use by authorized personnel to verify completion of cell site preparation activities prior to installation of Metro Cell equipment.

SP-GEN cell site general information

Complete the following information about the cell site.

- Cell Site Name: _____
- Cell Site Address: _____
- Cell Site Access Contact Name: _____
- Market Name: _____
- Cell Site number: _____
- Contact Phone number: _____.

Contents

SP-1 Site preparation general checklist	B-2
SP-2 Site preparation power source checklist	B-3
SP-3 Site preparation grounding checklist	B-4
SP-4 Site preparation RF antenna checklist	B-5
SP-5 Site preparation GPS antenna checklist	B-6
Site preparation punch list sheet	B-8
Site preparation punchlist sheet	B-9

DRAFT

DRAFT

SP-1 Site preparation general checklist

Purpose

Where applicable, the following items must be completed prior to the installation of site equipment. Circle the correct letter for the corresponding item descriptions.

Item #	Description	Yes (Y)	No (N)	N/A	Comments
1.	Are site environmental conditions within equipment specified operating range?	Y	N	N/A	
2.	Has the required space been provided around equipment [i.e., maintenance access, heat dissipation, safety]?	Y	N	N/A	
3.	Has a Method of Procedure (MOP) been developed with the installation supervisor?	Y	N	N/A	
4.	Has installer site equipment parameter sheet been completed and reviewed with the installation supervisor?	Y	N	N/A	
5.	Has all equipment been ordered and has delivery to site been scheduled?	Y	N	N/A	
6.	Have all necessary arrangements been made for access to the site?	Y	N	N/A	
7.	Have all necessary arrangements been made to get equipment onto the site (crane, etc.)?	Y	N	N/A	

Notes:

1. Completed by: _____
2. Date: _____

DRAFT

DRAFT

SP-2 Site preparation power source checklist

Purpose

Where applicable, the following items must be completed prior to the installation of the site equipment. Circle the correct letter for the corresponding item descriptions.

Item #	Description	Yes (Y)	No (N)	N/A	Comments
1.	Is power service available?	Y	N	N/A	
2.	Have power service and conduits been approved by local code?	Y	N	N/A	
3.	Is power service equipped with surge protection at service entry point?	Y	N	N/A	
4.	Is the power source appropriate for equipment being installed?	Y	N	N/A	
5.	Does power service have proper circuit breaker rating(s) and labeling?	Y	N	N/A	
6.	Is power circuit breaker(s) available and labeled for power system?	Y	N	N/A	
7.	Is power circuit breaker(s) available and labeled for listed ancillary equipment?	Y	N	N/A	
	A.	Y	N	N/A	
	B.	Y	N	N/A	
	C.	Y	N	N/A	
8.	Do elevated lighting, intrusion lighting, etc. feeds have proper lightning protection?	Y	N	N/A	
9.	If not supplied with the product, have at least two AC duplex convenience outlets been provided within 1.5 meters (5 feet) of the product? NOTE: A Ground Fault Circuit Interrupt (GFCI) type is recommended, and must be used when required by code.	Y	N	N/A	
10.	Is each outlet protected by a UL/CSA listed, or approved 15 A circuit breaker?	Y	N	N/A	

DRAFT

DRAFT

SP-3 Site preparation grounding checklist

Purpose

Where applicable, the following items must be completed prior to the installation of the site equipment. Circle the correct letter for the corresponding description items.

Item #	Description	Yes (Y)	No (N)	N/A	Comments
1.	Is soil resistivity and site resistance test on file?	Y	N	N/A	
2.	Has connection been provided to grounding electrode system? If yes, circle all that apply: A. Via a buried ring ground and driven rod(s) B. Via a buried metallic and electrically continuous water pipe C. Via driven ground rod(s) and/or plate(s) D. Via electrolytic ground rod(s) E. Via grounded building steel F. Via grounded grid or radial	Y	N	N/A	
3.	Is antenna support structure(s) grounded?	Y	N	N/A	
4.	Is antenna tower bonded to grounding electrode system?	Y	N	N/A	
5.	Are any guy wires bonded to grounding electrode system?	Y	N	N/A	
6.	Are antenna cable shields grounded at both ends?	Y	N	N/A	
7.	Are all ground connections in compliance with Alcatel-Lucent requirements (exothermic weld, compression type with 2-hole lugs; properly secured; anti-oxidant used on contact surface area)?	Y	N	N/A	
8.	Are all grounding conductors routed as straight as possible with no loops or sharp bends?	Y	N	N/A	
9.	Is equipment support structure grounded?	Y	N	N/A	

DRAFT

DRAFT

Item #	Description	Yes (Y)	No (N)	N/A	Comments
10.	Are metallic conduits bonded at both ends and 7.62-meters (25-foot) intervals?	Y	N	N/A	
11.	Is power supply equipped with a surge protection device and is the device properly connected to the ground system?	Y	N	N/A	
12.	Are the additional surge protection devices properly connected to the ground system?	Y	N	N/A	
13.	Is strand cable adequately grounded?	Y	N	N/A	

Notes:

1. Completed by: _____
2. Date: _____

SP-4 Site preparation RF antenna checklist

Purpose

Where applicable, the following items must be completed prior to the installation of the RF cell site equipment. Circle the correct letter for the corresponding item descriptions.

Item #	Description	Yes (Y)	No (N)	N/A	Comments
1.	Are all antenna cable runs installed?	Y	N	N/A	
2.	Are all antenna cable runs properly terminated with the appropriate connectors on the equipment side?	Y	N	N/A	
3.	Are all cable connections torqued to the appropriate value?	Y	N	N/A	
4.	If required, are the optional RF antenna cables equipped with surge protection devices?	Y	N	N/A	
5.	Are all external cables UV rated?	Y	N	N/A	
6.	Are antenna cable runs' demarcation points in proper location?	Y	N	N/A	

DRAFT

Item #	Description	Yes (Y)	No (N)	N/A	Comments
7.	Are antenna cable runs marked and in proper sequence per applicable equipment drawings?	Y	N	N/A	
8.	Are appropriate type, length and number of antenna cable jumpers available?	Y	N	N/A	
9.	Are appropriate drip loops provided for antenna cable runs at turns and demarcation point?	Y	N	N/A	
10.	Have antenna and cable sweeps been performed?	Y	N	N/A	
11.	Are antennas properly installed and secured?	Y	N	N/A	

Notes:

1. Completed by: _____
2. Date: _____

SP-5 Site preparation GPS antenna checklist

Purpose

Where applicable, the following items must be completed prior to the installation of the site equipment. Circle the correct letter for the corresponding item descriptions.

Item #	Description	Yes (Y)	No (N)	N/A	Comments
1.	Is antenna installed with base level within two degrees?	Y	N	N/A	
2.	Is antenna installed with less than 25% of the sky masked by obstruction?	Y	N	N/A	
3.	Is GPS antenna located at least 3.05 m (10 ft.) vertically and horizontally from any active transmit antenna?	Y	N	N/A	
4.	Are aggregate cable loss, cable VSWR, total cable length, cable type, GPS antenna gain, KS list and serial numbers recorded in the site installation records?	Y	N	N/A	

DRAFT

Item #	Description	Yes (Y)	No (N)	N/A	Comments
5.	Is proper gain antenna installed for the total aggregate cable loss and length?	Y	N	N/A	
6.	Is measured cable VSWR within its specified value?	Y	N	N/A	
7.	If required, is the GPS antenna cable properly grounded and equipped with a proper surge protection device?	Y	N	N/A	
8.	Are proper service loops provided near antenna?	Y	N	N/A	
9.	Is proper drip loop provided for the outdoor antenna jumper cables?	Y	N	N/A	
10.	Are cable connections torqued to the appropriate value?	Y	N	N/A	
12.	Are all external cables UV rated?	Y	N	N/A	
13.	Are antenna bracket, pipes, and antenna properly secured?	Y	N	N/A	
14.	If required, has weatherproof protection tape been applied to GPS antenna cable connector joints?	Y	N	N/A	
15.	Was GPS antenna location verified for line of sight using a GPS test unit or equivalent?	Y	N	N/A	
16.	Is GPS antenna location free of external interference (i.e., radio stations, collocated equipment, etc.)?	Y	N	N/A	

Notes:

1. Completed by: _____
2. Date: _____

DRAFT

DRAFT

Site preparation punch list sheet

Purpose

The following punch list is used to track any outstanding site preparation items.

Item #	Comment/Description	Severity (1/2/3)	Corrective Action Required	
			(Y/N)	Completed Date

Notes:

1. Equipment installation cannot occur until outage is rectified and will void warranty or potentially cause personal injury.
2. Equipment installation can occur but issue must be rectified prior to handoff to customer or service turn-up so that the warranty is not voided.
3. Equipment installation, handoff to customer, or service turn-up can occur but not per Alcatel-Lucent recommendations.
4. Inspection Checklist Completion Sign-Off (complete below)
5. Was the punchlist continuation sheet on the next page used? Yes or No
6. Inspector's Name: _____
7. Inspector's Signature: _____ Date: _____

DRAFT

DRAFT

Site preparation punchlist sheet

Purpose

The following punchlist is used to track any outstanding site preparation items.

Item #	Comment/Description	Severity (1/2/3)	Corrective Action Required	
			(Y/N)	Completed Date

DRAFT

DRAFT

DRAFT

DRAFT

Appendix C: Product conformance statements

Overview

Purpose

This section presents the product conformance statements that apply to the Alcatel-Lucent 9768 Metro Radio Outdoor product.

The statements that are required are determined primarily by national or multi-national regulations. However, in some regions, contract terms determine which statements are required.

The presence of the statement indicates that the product does comply with that statement wherever it is required to do so.

Contents

United States compliance	**C-2**
Federal Communications Commission	C-2
Product safety conformance statements	C-4
Antenna exposure statements	C-5
FDA/IEC optical transmitter product compliance statements	C-5
Eco-environmental statements	C-6
Canadian compliance	**C-8**
Industry Canada	C-8
Product safety and exposure	C-8
Antenna exposure statements	C-9
IEC optical transmitter product compliance statements	C-10
Eco-environmental statements	C-11

DRAFT

DRAFT

United States compliance

Introduction

Purpose

The statements that follow are the product conformance statements that apply to the Alcatel-Lucent 9768 Metro Radio Outdoor Product when deployed in the United States.

Contents

Federal Communications Commission	C-2
Product safety conformance statements	C-4
Antenna exposure statements	C-5
FDA/IEC optical transmitter product compliance statements	C-5
Eco-environmental statements	C-6

Federal Communications Commission

Federal Communications Commission

Important! Changes or modifications not expressly approved by Alcatel-Lucent, Inc. could void the user's authority to operate the equipment.

This device complies with Part 15 of the FCC Rules. Operation is subject to the following two conditions:

(1) this device may not cause harmful interference, and

(2) this device must accept any interference received, including interference that may cause undesired operation.

FCC Part 15 Class B

Note: This equipment has been tested and found to comply with the limits for a Class B digital device, pursuant to Part 15 of the FCC Rules.

These limits are designed to provide reasonable protection against harmful interference in a residential installation.

DRAFT

DRAFT

This equipment generates, uses, and can radiate radio frequency energy and, if not installed and used in accordance with the instructions, may cause harmful interference to radio communications. However, there is no guarantee that interference will not occur in a particular installation.

If this equipment does cause harmful interference to radio or television reception, which can be determined by turning the equipment off and on, the user is encouraged to try to correct the interference by one or more of the following measures:

- Reorient or relocate the receiving antenna
- Increase the separation between the equipment and receiver
- Connect the equipment into an outlet on a circuit different from that to which the receiver is connected
- Consult the dealer or an experienced radio/TV technician for help.

FCC Part 68

This equipment complies with Part 68 of the FCC rules and the requirements adopted by the ACTA. At the upper-right-hand corner inside the cabinet assembly of this equipment is a label that contains, among other information, a product identifier in the format of AAAEQ##TXXXX. If requested, this number must be provided to the telephone company.

FIC	04DU9-1SN.
SOC	6.0N

The T1 network interface on this equipment is hardwired to a punchdown block, which meets the FCC specifications.

If this equipment causes harm to the telephone network, the telephone company will notify you in advance that temporary discontinuance of service may be required. However, if advance notice is not practical, the telephone company will notify the customer as soon as possible. Also, you will be advised of your right to file a complaint with the FCC if you believe it is necessary.

The telephone company may make changes in its facilities, equipment, operations, or procedures that could affect the operation of the equipment. If this happens, the telephone company will provide advance notice in order for you to make necessary modifications to maintain uninterrupted service.

FCC regulations prohibit the connection of customer-provided equipment to central office implemented systems. Connection to party lines is subject to tariffs; users should contact their state public utility commission, public service commission, or corporation commission for information.

DRAFT

If the equipment is causing harm to the telephone network, the telephone company may request that you disconnect the equipment until the problem is resolved.

If trouble is experienced with this equipment repair or warranty information may be obtained by contacting:

Technical Support Services, within the United States: +1 630 224 4762, prompt 2

Product safety conformance statements

Product safety conformance

The Alcatel-Lucent 9768 Metro Radio Outdoor is Safety Certified ITE by CSA International.

This Certification is marked on the equipment main nameplate label. Should the local Authority Having Jurisdiction (AHJ) require prior or additional verification of this Certification, a Product Certificate of Compliance can be obtained from the specific Certification Body by the Business/Product Unit Applicant for the product or by contacting:

Technical Support Services, within the United States: +1 630 224 4762, prompt 2

Any modifications to this equipment are not permitted without review and official written authorization from the specific Certification Body. Unauthorized changes may violate the Product Safety Certification. Modifications or changes authorized by official CN/CNN are assumed to have received prior approval from this Lab.

Indoor applications

This equipment is intended for installation in restricted access locations where access is controlled or where access can only be gained by service personnel with a key or tool. Access to this equipment is restricted to qualified service personnel only.

DRAFT

Antenna exposure statements

Antenna exposure

Antenna installations for the Alcatel-Lucent 9768 Metro Radio Outdoor product will be performed in accordance with all applicable manufacturer's recommendations, and national laws and regulations. To ensure correct antenna installation, the antenna installer will perform all necessary calculations and/or field measurements to evaluate compliance with applicable national laws or regulations regarding exposure to electromagnetic fields. The supplier of radio equipment, the supplier of antenna equipment and the integrator and builder of the site must provide sufficient information so that the limits of the exclusion zones can be determined. Any changes to the antenna or other equipment in the transmit path may require re-evaluation of the exposures to electromagnetic fields.

Pursuant to 47 CFR Part 1, Subpart I, subject to the provisions of section 1.1307, all installations must be evaluated for requirements contained in Table 1, “Limits for maximum permissible exposure,” in section 1.1310.

FDA/IEC optical transmitter product compliance statements

FDA/IEC optical transmitter product compliance

Alcatel-Lucent declares that this equipment complies with the Food and Drug Administration’s Center for Devices and Radiological Health (FDA/CDRH) regulations 21 CFR 1040.10 and 1040.11. It is a Class I/1 laser optical fiber communication systems “product” under the FDA.

This Product is designed to ensure that personnel operating the product are not endangered by laser radiation during normal operation and fault conditions. This product does not present a risk of eye injury because it is fully enclosed and does not contain embedded lasers greater than Class I/1 unless otherwise noted.

DRAFT

DRAFT

Laser warning

WARNING

Laser hazard

Use of controls or adjustments or performance of procedures other than those specified herein may result in hazardous laser radiation exposure.

Do not view directly into the laser beam with optical instruments such as a fiber microscope because viewing of laser emission in excess of Class 1 limits significantly increases the risk of eye damage.

Never look into the end of an exposed fiber or an open connector as long as the optical source is switched on.

Ensure that the optical source is switched off before disconnecting optical fiber connectors.

Eco-environmental statements

Packaging collection and recovery requirements

Countries, states, localities, or other jurisdictions may require that systems be established for the return and/or collection of packaging waste from the consumer, or other end user, or from the waste stream. Additionally, reuse, recovery, and/or recycling targets for the return and/or collection of the packaging waste may be established.

For more information regarding collection and recovery of packaging and packaging waste within specific jurisdictions, contact the Alcatel-Lucent Environment, Health and Safety organization or Alcatel-Lucent Hazardous Waste Center technical support at (888) 539-2783.

For installations not performed by Alcatel-Lucent, please contact the Alcatel-Lucent Customer Support Center at:

Technical Support Services, within the United States: +1 630 224 4762, prompt 2

Material content compliance

The following notification applies to Alcatel-Lucent products distributed for sale, resale, or use.

This product, part, or both may include a lithium-manganese dioxide battery, which contains very small amounts of a perchlorate substance. Special handling may apply.

DRAFT

For California:

Perchlorate Material - special handling may apply.

See *http://www.dtsc.ca.gov/hazardouswaste/perchlorate/*.

Canadian compliance

Introduction

Purpose

The statements that follow are the product conformance statement that apply to the Alcatel-Lucent 9768 Compact Metro Radio Outdoor when deployed in Canada.

Contents

Industry Canada	C-8
Product safety and exposure	C-8
Antenna exposure statements	C-9
IEC optical transmitter product compliance statements	C-10
Eco-environmental statements	C-11

Industry Canada

EMC approval

ICES-003: Interference-Causing Equipment Standard Digital Apparatus

The Alcatel-Lucent Metro Radio product complies with Canadian ICES-003.

Cet appareil numérique de la classe A est conforme à la norme NMB-003 du Canada.

Product safety and exposure

Product safety conformance

This equipment is safety certified to C22.2 No. 60950-1 for Canada by a laboratory accredited by the Standards Council of Canada (SCC), such as CSA, UL, or others. The product bears this certification mark of this certification laboratory on its main nameplate label. Should the local authority having jurisdiction (AHJ) require prior or additional verification of this certification, a product certificate of compliance can be obtained from the specific certification laboratory by the business/product unit Applicant for the product. Any modifications to this equipment are not permitted without review and written official

DRAFT

authorization from the specific certification laboratory. Unauthorized changes may violate the product safety certification. Modifications or changes authorized by official CN/CNN are assumed to have received prior approval from this Lab.

Human exposure

Pursuant to Health Canada Safety Code 6, Limits of Human Exposure to Radio frequency Electromagnetic Fields in the Frequency Range from 3 kHz to 300 GHz, all installations must be evaluated against the Maximum Exposure Limits as described in Health Canada 99-EHD-237.

Antenna exposure statements

Antenna exposure

Antenna installations for this equipment shall be performed in accordance with all applicable manufacturer's recommendations, and national laws and regulations. To ensure correct antenna installation, the antenna installer shall perform all necessary calculations and/or field measurements to evaluate compliance with applicable national laws or regulations regarding exposure to electromagnetic fields.

The supplier of radio equipment, the supplier of antenna equipment and the integrator and builder of the site must provide sufficient information so that the limits of the exclusion zones can be determined. Any changes to the antenna or other equipment in the transmit path may require re-evaluation of the exposures to electromagnetic fields.

The antenna(s) used for this transmitter must be installed to provide a separation distance of at least 1.8 m from all persons.

Les antennes utilisées pour cet émetteur doivent être installées de façon à respecter une distance de sécurité d'au moins 1.8 m.

DRAFT

IEC optical transmitter product compliance statements

IEC optical transmitter product compliance

Alcatel-Lucent declares that this equipment complies with the International Electrotechnical Commission (IEC) standards IEC 60825-1 Edition 2.0 (2007) and IEC 60825-2 Edition 3.1 (2007). It is a Class I/1 laser optical fiber communication systems “product” under the IEC classifications.

This product is designed to ensure that personnel operating the product are not endangered by laser radiation during normal operation and fault conditions. This product does not present a risk of eye injury because it is fully enclosed and does not contain embedded lasers greater than Class I/1 unless otherwise noted.

Laser warning

WARNING

Laser hazard

Use of controls or adjustments or performance of procedures other than those specified herein may result in hazardous laser radiation exposure.

Do not view directly into the laser beam with optical instruments such as a fiber microscope because viewing of laser emission in excess of Class 1 limits significantly increases the risk of eye damage.

Never look into the end of an exposed fiber or an open connector as long as the optical source is switched on.

Ensure that the optical source is switched off before disconnecting optical fiber connectors.

DRAFT

Eco-environmental statements

Packaging collection and recovery requirements

Countries, states, localities, or other jurisdictions may require that systems be established for the return and/or collection of packaging waste from the consumer, or other end user, or from the waste stream. Additionally, reuse, recovery, and/or recycling targets for the return and/or collection of the packaging waste may be established.

For more information regarding collection and recovery of packaging and packaging waste within specific jurisdictions, contact the Alcatel-Lucent Environment, Health and Safety organization or Alcatel-Lucent Hazardous Waste Center technical support at (888) 539-2783.

For installations not performed by Alcatel-Lucent, please contact the Alcatel-Lucent Customer Support Center at:

Technical Support Services, within Canada: +1 630 224 4672, prompt 2

DRAFT

DRAFT

DRAFT

DRAFT

Appendix D: Related information

Overview

Purpose

For information on subjects related to this product, refer to the documents listed in this appendix.

Contents

9768 CMRO documentation	D-1
7705 SAR-O documentation	D-2
LTE End-to-End Solution and LTE RAN documentation	D-3
Surge, Grounding, and Lightning documentation	D-5

9768 CMRO documentation

Applicable 9768 CMRO documents

For information on subjects related to this product, refer to the documents listed in the following table. Where applicable, click the “At this location” link. On the resulting Online Customer Support (OLCS) product or solution page, select “Manuals and Guides” to access the document.

Table D-1 Related Information - 9768 CMRO

Refer to this document	At this location	For more information on
Alcatel-Lucent 9768 Compact Metro Radio Outdoor Site Preparation	9926 DBS-LTE (Distributed Base Station for LTE) (https://support.alcatel-lucent.com/portal/productContent.do?entryId=1-0000000003822)	9768 CMRO site preparation.

DRAFT

Table D-1 Related Information - 9768 CMRO (continued)

Refer to this document	At this location	For more information on
Alcatel-Lucent 9768 Compact Metro Radio Outdoor Technical Description	9926 DBS-LTE (Distributed Base Station for LTE) (https://support.alcatel-lucent.com/portal/productContent.do?entryId=1-0000000003822)	9768 CMRO technical description.
Alcatel-Lucent 9768 Compact Metro Radio Outdoor Maintenance and Troubleshooting	9926 DBS-LTE (Distributed Base Station for LTE) (https://support.alcatel-lucent.com/portal/productContent.do?entryId=1-0000000003822)	9768 CMRO maintenance and troubleshooting (including hardware replacement).
976x Compact Metro Model Offer Provisioning Guide, LTE/IRC/APP/044619	Subject to non-disclosure agreement and available from Alcatel-Lucent representatives.	Describes the different 9768 CMRO hardware configurations, related provisioning rules, and SLI codes.

7705 SAR-O documentation

Applicable 7705 SAR-O documents

For information on subjects related to this product, refer to the documents listed in the following table. Where applicable, click the “At this location” link. On the resulting Online Customer Support (OLCS) product or solution page, select “Manuals and Guides” to access the document.

Table D-2 Related information - 7705 SAR-O

Refer to this document	At this location	For more information on
CPRI CWDM Application of Optical OADM in eNodeB - Model Offer Provisioning Guide (MOPG)	subject to non-disclosure agreement and available from Alcatel-Lucent representatives	Provides the Alcatel-Lucent 7705 Service Aggregation Router-Optical (7705 SAR-O) product overview and CPRI Multiplexing topologies and ordering codes.

DRAFT

Table D-2 Related information - 7705 SAR-O (continued)

Refer to this document	At this location	For more information on
Alcatel-Lucent 7705 SAR-O Chassis Installation Guide R7.0.R1	subject to non-disclosure agreement and available from Alcatel-Lucent representatives	Provides an overview of the Alcatel-Lucent 7705 Service Aggregation Router-Optical (7705 SAR-O) chassis, procedures for installing and grounding the unit for a pole mount or wall mount, and procedures for cabling the unit.

LTE End-to-End Solution and LTE RAN documentation

Applicable LTE End-to-End Solution and LTE RAN documents

For information on subjects related to this product, refer to the documents listed in the following table. Where applicable, click the “At this location” link. On the resulting Online Customer Support (OLCS) product or solution page, select “Manuals and Guides” to access the document.

Table D-3 Related Information - LTE RAN and E2E LTE Solution

Refer to this document	At this location	For more information on
Library for LTE End-to-End Solution	LTE End-to-End Solution (https://support.alcatel-lucent.com/portal/productContent.do?entryId=1-0000000001078)	The full collection of documents in the LTE collection.
Alcatel-Lucent LTE eNodeB Macro and Metro Products FDD Release Notes	LTE End-to-End Solution (https://support.alcatel-lucent.com/portal/productContent.do?entryId=1-0000000001078)	Provides software and feature status information.
Alcatel-Lucent 9400 LTE Radio Access Network Terminology Overview	LTE End-to-End Solution (https://support.alcatel-lucent.com/portal/productContent.do?entryId=1-0000000001078)	Describes the terms and abbreviations of network elements, interfaces, network channels, protocols, services, and other entities used in Long Term Evolution (LTE) Radio Access Network (RAN).

DRAFT

DRAFT

Table D-3 Related Information - LTE RAN and E2E LTE Solution (continued)

Refer to this document	At this location	For more information on
FDD eNodeB Product Engineering Guide	LTE End-to-End Solution (https://support.alcatel-lucent.com/portal/productContent.do?entryId=1-0000000001078)	Describes the different Alcatel-Lucent LTE eNodeB Macro and Metro hardware configurations, and the related engineering rules and guidelines.
LTE Small Cells RF Guideline, LTE-DCL-APP-037536	LTE End-to-End Solution (https://support.alcatel-lucent.com/portal/productContent.do?entryId=1-0000000001078)	This document describes the process of dimensioning and designing the radio system of an LTE small cells network, including Small cells RF Design solutions and Macro-Metro cell interference scenarios in outdoor and indoor conditions.
LTE Indoor RF Design Guidelines, LTE-DCL-APP-035537	LTE End-to-End Solution (https://support.alcatel-lucent.com/portal/productContent.do?entryId=1-0000000001078)	This document describes the process of dimensioning and designing the radio system of an LTE small cells network, including the LTE radio design process and design solutions for coverage and capacity problems pertaining to indoor Metro Cells.
LTE Outdoor RF Design Guidelines, LTE-DCL-APP-035538	LTE End-to-End Solution (https://support.alcatel-lucent.com/portal/productContent.do?entryId=1-0000000001078)	This document describes the process of dimensioning and designing the radio system of an LTE small cells network, including the LTE radio design process and design solutions for coverage and capacity problems pertaining to outdoor Metro Cells.

DRAFT

DRAFT

Surge, Grounding, and Lightning documentation

Applicable Surge, Grounding, and Lightning documents

For information on subjects related to this product, refer to the documents listed in the following table.

Table D-4 Related Information - Grounding, Lightning, and Surge

Refer to this document	At this location	For more information on
Grounding and Lightning Protection Guidelines for Lucent Technologies Network Wireless System Cell Sites, 401-200-115	LTE End-to-End Solution (https://support.alcatel-lucent.com/portal/productContent.do?entryId=1-0000000001078)	Grounding and Lightning protection systems
Standard for Installation of Lightning Protection Systems, NFPA 780	IEEE Xplore Digital Library (http://ieeexplore.ieee.org/Xplore/home.jsp)	Lightning protection systems
Recommended Practices on Surge Voltages in Low Voltage AC Power Circuits, IEEE C62.41 (Latest Edition)	IEEE Xplore Digital Library (http://ieeexplore.ieee.org/Xplore/home.jsp)	Power

DRAFT

DRAFT

DRAFT

Glossary

DRAFT

This glossary provides a quick reference to the terms, acronyms, and abbreviations commonly used in the Alcatel-Lucent Metro product documentation.

Numerics

3G
Third Generation

3GPP
3rd Generation Partnership Project
A collaboration between groups of telecommunications associations for the promotion and standardization of high-speed cellular services.

5620 SAM
5620 Service Aware Manager

9952 WPS
9952 Wireless Provisioning System

A

A (Ampere)
Base SI unit of electrical current.
SI is the International System of Units (abbreviated SI from French: Le Système international d'units).

A-GPS
Assisted Global Positioning System

AAA
Authentication, Authorization, and Accounting

AC
Access Class

AC (Alternating Current)
Continuously variable current, rising to a maximum in one direction, falling to zero, then reversing direction and repeating the cycle in the other direction.

DRAFT

DRAFT

AC convenience outlet

Sites must be equipped with at least two duplex outlets for installation and maintenance procedures. The outlets are required to power test equipment and installation tools.

ACF (AC Fail)

The AC Fail (ACF) alarm indicates that AC input to one or more rectifiers in the power plant is absent or outside of the operating range of the equipment

ACLR

Adjacent Channel Leakage power Ratio

AHJ

The agency or authority having jurisdiction. Article 100 of the National Electrical Code (NEC) for the United States defines AHJ with greater specificity, stating that it *may be a federal, state, local government, or individual such as a fire chief, fire marshal, chief of a fire prevention bureau, labor department or health department, building official or electrical inspector, or others having statutory authority. In some circumstances, the property owner or his/her agent assumes the roles, and at government installations, the commanding officer or departmental official may be the AHJ.*

Ambient temperature

The temperature of air or other media in a designated area, particularly the area

ANR

Automatic Neighbor Relation

ANSI (American National Standards Institute)

An organization chartered to accredit standards developed by a wide variety of industry groups, without influence from any one company or organization. Does not develop standards, but reviews and implements standards developed by other organizations. ANSI is a member of the International Standards Organization (ISO).

Antenna

An elevated device for radiating or receiving radio waves. It changes electrical currents into electromagnetic waves, and conversely, electromagnetic waves into electrical currents.

AP

Access Point

AP (Application Processor)

Network element located at the MSC which provides the radio control logic for managing calls. The AP is a general-purpose computer that can host a number of RCS virtual machines.

AWG (American Wire Gauge)

American standard for classifying wire diameter.

B

backhaul

The portion of the network connecting the base band unit (BBU) to the mobile core network.

DRAFT

DRAFT

Backup

Facility used to replace an element which has failed.

Base station

The equipment that provides the air interface that allows mobile terminals to communicate with the telecommunications network.

BBU

BaseBand Unit

BD (Battery on Discharge, first stage)

The Batteries on Discharge (BD) alarm indicates the power system output voltage has decreased below the “batteries on discharge” threshold set point. The “batteries on discharge” threshold is set for 50.0 volts (for -48-VDC systems) or 25.0 volts (for +24-VDC systems).

BD-2 (Battery on Discharge-2)

The Batteries on Discharge (BD-2) alarm indicates the power system output voltage has decreased below the “batteries on a second discharge” threshold set point. The “batteries on a second discharge” threshold is set for 44.0 volts (for -48-VDC systems) or 22.0 volts (for +24-VDC systems).

BOCA

Building Officials and Code Administrators

Bonding

Permanent connection of metallic parts to form an electrically conductive path that assures electrical continuity and has the capability to safely conduct any current likely to be imposed.

Branch circuit

The circuit conductors between the final overcurrent device protecting the circuit and the outlet.

Breaker, circuit

A cut-out device which breaks a circuit when preset limits of current are exceeded.

Buried cable

A communication cable manufactured or produced for the purpose of burial in direct contact with the earth.

Buried ring ground

A buried, bare, tinned, solid copper cable encircling the site building and/or tower foundation.

Bus bar

One or more conductors that serves as a common connection for a group of related devices.

Busy hour

The uninterrupted period of 60 minutes for which the average intensity of traffic is at maximum.

DRAFT

DRAFT

BW

Bandwidth

C

Cable run

Referring to cable routing.

Cable sweep

(See Sweep)

CAN/CSA

Canadian Standards Association. See http://www.csa.ca (http://www.csa.ca).

CDRH

Center for Devices and Radiological Health

CE

Conformité Européene
A CE Marking on a product is a manufacturer's declaration that the product complies with the essential requirements of the relevant European health, safety and environmental protection legislation.

Cell site

An installation located within a cell that houses the equipment needed to set up and complete calls on a cellular telephone.

CFR

Code of Federal Regulations.
Among these regulations, Title 47, “Telecommunication,” conveys the rules of the FCC companies operating networks in the USA. See also **FCC**.

CIC (Customer Information Center)

Source for locating and obtaining delivery of Alcatel-Lucent customer documents.

Circuit

1. The complete path between two terminals over which one-way or two-way communications may be provided. 2. An electronic path between two or more points, capable of providing a number of channels. 3. A number of conductors connected together for the purpose of carrying an electrical current. 4. An electronic closed-loop path among two or more points used for signal transfer. 5. A number of electrical components, such as resistors, inductances, capacitors, transistors, and power sources connected together in one or more closed loops.

CISPR

The [special] international committee on radio interference. Its publication CISPR 22, Information Technology Equipment—Radio Disturbance Characteristics—Limits and Methods of Measurement addresses any device that emits RF outside the scope of its intended purpose.

DRAFT

DRAFT

CLI

Command Line Interface

CMAS

Commercial Mobile Alert System

CMS

Certificate Management System

CN/CNN

Arcane term for changes notices that affect Alcatel-Lucent products.

Coaxial cable

A cable with one or more coaxial pairs under one outer sheath. The cable consists of a center conductor surrounded by an insulating material and a concentric outer conductor.

Configuration

An arrangement of functional units according to their nature, number, and chief characteristics.

Controlled environment

An indoor location in which temperature, humidity, and ventilation are maintained at specific levels.

Core

A subset of generic requirements published by Telcordia Technologies. See also GR. The Core requirements that affect the Metro product (Radio/Cell) concern spurious emissions, surges from lightning, and resistance to wind, wind-driven rain, salt fog, and extreme ambient temperature.

CPC

Circular Plastic Connector

CPRI

Common Public Radio Interface

CS

Circuit Switched

CSA

Convergent Security Asset

CSA (Canadian Standards Association)

An independent, non-government, not-for-profit association for the development, by consensus, of Canadian standards and product certifications.

CSC (Cell Site Configuration)

Sheets provided in this document for documenting cell site configuration, conditions, and other pertinent information for reference during product deployment, and future additions.

DRAFT

DRAFT

D

d2U

digital 2U-height box.
The BBU system supporting two controller and two modems. See also BBU.

dB (decibel)

A unit which expresses the ratio of two voltages, currents, or powers. Decibel (dB) is used to specify transmission loss, gain, or relative level. Decibel (dB) equal to 20 times the common logarithm of the ratio of two voltages or two currents, or 10 times the common logarithm of the ratio of two powers.

dBi (decibels (dB) relative to isotropic)

Decibels relative to an isotropic antenna gain at radio frequencies.
Antenna gain is usually defined as the ratio of the power produced by the antenna from a far-field source on the antenna's beam axis to the power produced by a hypothetical lossless isotropic antenna, which is equally sensitive to signals from all directions. Usually this ratio is expressed in decibels, and these units are referred to as "decibels-isotropic" (dBi).

DC (Direct Current)

Current flow in one direction.

DFS

Dynamic Frequency Selection

DHCP

Dynamic Host Configuration Protocol

Diversity

A method of radio transmission and/or reception, which counteracts the effects of fading by combining several signals all bearing the same information.

DL

Downlink

DNS

Domain Name System

DoS

Denial of Service

Down conductor

A vertical conductor of low impedance that connects the cell site grounding electrode system to the grounding electrode system.

Driven ground rod

A copper-clad steel or stainless steel rod, a minimum of 2.4 meters (8 feet) long and 5/8 inch in diameter.

DRAFT

DRAFT

DRX

Discontinuous Reception

DSCP

Differentiated Services Code Point

E

E1

A four-wire voice and data trunking facility that carries 30 duplex channels in 64-kbps time slices. E1 facilities are commonly used in countries outside of North America.

Earthquake zone

Seismic ratings ranging from zone 1 (relatively low central office operational shock and vibration levels) to the most severe zone 4 levels. Equipment must be able to withstand earthquake zone requirements under both operational and non-operational conditions.

ECID

Enhanced Cell ID

EEC directive

A law enacted by the European Union for enforcement by its Common Market. The terms of such a law have been used as a point of reference against which to compare the intentional RF emissions of the MRO.

EIRP

Effective Isotropic Radiated Power

Electrolytic ground electrode (rods)

A low resistance grounding rod (pipe) using low resistivity materials.

EMS

Element Management System

ESD

Electrostatic discharge.
A hazard that electronic equipment such as the Metro Cell or Metro Radio can suffer by way of exposure to static electricity or proximity to something that has no connection to ground.

ETSI

European Telecommunications Standards Institute

EU

European Union

Exothermic weld

A method of making electrical connections of copper to copper or copper to steel using high temperature fusion. The molten copper flows over conductors in a mold, melting, and welding them together.

DRAFT

DRAFT

F

FA (Fuse Alarm)

The fuse alarm (FA) indicates that the power system battery and load protection fuse opens.

Facility

Any element of physical telephone equipment needed to provide service, such as cables, switching systems, and microwave radio transmission systems.

FCC (Federal Communications Commission)

A group founded in 1934 to regulate all types of communications in the United States.

FDA

Food and Drug Administration

FDD

Frequency Division Duplex

Float

To operate a power load on a main-driven rectifier in parallel with a low impedance storage battery, which is kept fully charged by the rectifier and is itself only called upon to provide power during temporary and short-duration peaks for which the rectifier output is insufficient.

FM

Fault Management

FQDN

Fully Qualified Domain Name

Frequency

For a periodic wave, such as alternating current, the number of complete cycles per unit of time. The unit of frequency is cycles per second, or hertz.

fronthaul

The common public radio interface (CPRI) connection between a standalone remote radio head (for example: 9768 MRO, 9768 CMRO) and the base band unit (BBU).

FRU

Field Replaceable Unit

Full AXS

Cable connector used for CPRI connection to the Metro product (Radio/Cell).

Fuse

An overcurrent protective device that has as its critical component a metal wire or strip that will melt when heated by a prescribed (design) amperage, creating an open in the circuit of which it is a part, thereby protecting the circuit from an overcurrent condition.

DRAFT

DRAFT

G

GA

General Availability

Gain

The ratio of output current, voltage, or power to input current, voltage, or power, respectively. Gain is usually expressed in dB. If the ratio is less than unity, the gain, expressed in dB, will be negative, in which case there is a loss between input and output.

Garmin 45XLS

A handheld GPS receiver that can be used to verify GPS reception at a cell site. It has a removable antenna and provides +5 VDC on the center pin of the RF connection to power external active antennas. If poor GPS reception is suspected, the Garmin 45XLS can be used to verify that the GPS antenna and cable system is working acceptably. It will also verify that the GPS antenna location is acceptable.

GE (Gig-E, GBE)

Gigabit Ethernet

GFCI (Ground Fault Circuit Interrupter)

A device intended for protection of personnel that functions to de-energize a circuit or portion thereof within an established period of time when a current to ground exceeds some predetermined value that is less than that required to operate the overcurrent protective device of the supply circuit.

GHz

GigaHertz

GLONASS

GLONASS is an acronym, which stands for Globalnaya Navigazionnaya Sputnikovaya Sistema, or Global Navigation Satellite System. GLONASS is a satellite navigation system operated by the Russia.

GNSS

Global Navigation Satellite System

GPON

Gigabit Passive Optical Network

GPRS

General Packet Radio Services

GPS (Global Positioning System)

A system of 24 satellites that provides, among other things, extremely accurate timing information to the cell sites.

GR

Generic requirements published by Telcordia Technologies. See also **Core**.

DRAFT

DRAFT

Ground

A conducting connection between equipment or an electrical circuit and earth, or conductive body that is used in place of earth

Grounding conductor

A conductor used to connect equipment or a grounded electrical circuit to the grounding electrode system.

Grounding electrode system

The conductive objects that are intentionally bonded to furnish connection to earth (that is, buried ring ground with ground rods, electrically continuous buried metallic water pipe, electrolytic ground electrode, and so on).

GTP

GPRS Tunneling Protocol

GUI

Graphical User Interface

Guy

Steel wire or rope used to hold a pole upright.

H

Handoff

A automatic transfer of a cellular telephone call from one cell to another, maintaining call quality as the mobile user moves through the coverage area.

HDM

Home Device Manager

Heat dissipation

The heat generated by cabinets during operation.

HPBW

Half Power Beamwidth

HSDPA

High-Speed Downlink Packet Access

HSPA

High-Speed Packet Access

HSUPA

High-Speed Uplink Packet Access

HTTP

Hypertext Transfer Protocol

DRAFT

DRAFT

HV
High Voltage

HVAC (Heating, Ventilation, Air Conditioning)

Hz (hertz)
A unit of frequency of a periodic process equal to one cycle per second.

I

I^2C
Inter-integrated Circuit

ICNIRP
International Commission for Non-Ionizing Radiation Protection

IEC
International Electrotechnical Commission. The Metro products comply with numerous standards that this independent body has propagated.

IEEE
Institute of Electrical and Electronics Engineers

Indoor site
Installation site in a controlled environment, allowing the use of indoor cabinets.

INTR (Intrusion Alarm)
The Intrusion (INTR) alarm indicates a door or access panel to the power system is open.

IP
Internet Protocol

IPsec
Internet Protocol Security

IPx5
The subset of the standard IEC 60529 to which the Metro product (Radio/Cell) conforms in its resistance to intrusion by water. Conformance to this subset means that the Metro product (Radio/Cell) withstands a 3 minutes test of 12.5 liters/minute at 30 kN/m2 from 3 meters away.

IRC
Interference Rejection Combining

ISM
Industrial, Scientific, and Medical

IT
In an IT earthing system, the electrical distribution system has no connection to earth at all, or it has only a high impedance connection. In such systems, an insulation monitoring device is used to

DRAFT

DRAFT

monitor the impedance.

L

LAN
Local Area Network

LC
A small connector that terminates a fiber optic cable and snaps into its mate.

LED
light emitting diode

LMT
Local Maintenance Terminal

Load
The power consumed by a device or circuit in performing its function.

Loss
The diminution, usually expressed in dB, of signal level in a communications medium. The power, usually expressed in watts, consumed by a circuit or component. The energy dissipated without accomplishing useful work or purpose.

lR / LR (lightRadio™)
The Alcatel-Lucent lightRadio™ family of wireless products.

LTE
Long Term Evolution

LV
Low Voltage

M

MAC (address)
Media Access Control Address
A MAC address is a hardware identification number that uniquely identifies each device on a network.

MAC (protocol)
Medium Access Control Protocol
The media access control (MAC) data communication protocol is a sublayer of the data link layer. MAC protocol provides addressing and channel access control mechanisms that make it possible for multiple terminals or network nodes to communicate within a multiple access network that incorporates a shared medium, for example, Ethernet.

MCI
Metro Cell Indoor

DRAFT

DRAFT

MCO

Metro Cell Outdoor

MFBI

Multiple Frequency Band Indicators

MGB (Main Ground Bus)

A copper bus bar used to provide the electrical interfaces for connection of the isolated ground plane to the integrated ground system.

MHz (Megahertz)

Reference of radio frequency spectrum of one-million cycles.

MIMO

multiple input, multiple output
An antenna technology for wireless communications in which multiple antennas are used at both the source (transmitter) and the destination (receiver).

MME

Mobility Management Entity

MOP (Method of Procedure)

Cell site walk-through where site preparation activities are verified prior to installing the 9412 eNodeB Compact equipment.

MRO

Metro Radio Outdoor

MSC (Mobile Switching Center)

In an automatic cellular mobile system, the interface between the radio system and the public switched telephone network. The MSC performs all signaling functions that are necessary to establish calls to and from mobile stations.

MSP

Mobile Service Provider

MSP

mobile service provider

MTBF

Mean Time Between Failure

mW

milliWatt

DRAFT

DRAFT

N

NAR

North American Region

NEC (National Electric Code)

Standard that governs the use of electric wire, cable, and fixtures, and electrical and optical communication cable installed in buildings.

NEM

Network Element Manager

NEMA

National Electrical Manufacturers Association. The Metro product (Radio/Cell) qualifies as a NEMA 250-2008 standard Type 4 enclosure with respect to intrusion of dust and wind-driven rain.

Network

A set of terminals, the communications link that joins them, and the protocols that allow them to function together and communicate with each other.

NFPA (National Fire Protection Association)

Standards and code writing organization made up of volunteer industrial and institutional subject-matter-expert committees.

NG-SEC

Next Generation Security

NIU (Network Interface Unit)

A device that performs interface functions, such as code conversion, protocol conversion, and buffering, required for communications to and from a network. The device is used primarily within a local area network to allow a number of independent devices, with varying protocols, to communicate with each other. An NIU converts each device protocol into a common transmission protocol. The transmission protocol may be chosen to accommodate directly a number of the devices used within the network without the need for protocol conversion for those devices by the NIU.

Nominal

Specified value or intended value independent to any uncertainty in its realization. In a device that realizes a physical quantity, it is the value of such a quantity specified by the manufacturer.

Non-Alcatel-Lucent power

3rd- party power systems, or power systems other than Alcatel-Lucent.

NSP

Network Services Platform

DRAFT

DRAFT

O

OAM (OA&M)
Operations, Administration, and Maintenance

OFDM
Orthogonal frequency-division multiplexing, the multi-carrier modulation scheme that overcomes many commonly experienced wireless communications problems, such as multipath and signal attenuation.

OLCS
Online Customer Support

OOT
Out Of Time alignment

OPS
On-Path Support

OSP
Outside Plant

OSS
Operation Support System

OTDOA
Observed Time Difference Of Arrival

P

P-GW
Packet Data Network Gateway

Pair cable
Cable made up of one or more separately insulated wire pairs, none of which is arranged with another quads.

PCI
Physical Cell ID

PD
Powered Device

PDCP
Packet Data Convergence Protocol, which provides security to both the air interface and the fiber optic interface of the MRO by compressing and decompressing the IP headers, as specified in the UMTS protocol stack.

DRAFT

DRAFT

PDU

Power Distribution Unit

Phase

The number of separate voltage waves in commercial alternating current, designated as "single phase", "three-phase", and so on.

Pigtail

A short length of electrical conductor permanently affixed to a component, used to connect the component to another.

PM

Performance Management

PMJ

Conditions that affect service of the power system and/or require immediate attention are classified as major alarms and designated as Power Major (PMJ) alarms.

PMN

Conditions requiring service, but having no immediate affect on the power system output are classified as minor alarms and designated as Power Minor (PMN) alarms.

PnP

Plug and Play

PoE

Power over Ethernet

PVC (Polyvinyl Chloride)

A thermoplastic made of polymers, which is tough, nonflammable, and water resistant and is used as an insulation.

Q

QAM

Quadrature Amplitude Modulation

QoE

Quality Of Experience

QoS

quality of service

R

Radiall

The proprietary name of an enterprise that produces components for device interconnections. These components include the R2CT weatherized connector kit by which the Metro Radio installer retrofits the LC fiber optic connector on the fronthaul cable to the SFP port module of the

DRAFT

DRAFT

Metro Radio. The proper name of this company is Radiall USA, Inc. See also SFP.

RAN
Radio Access Network

RDC
Residual Current Device

Receive-only
Pertaining to a device or a mode of operation capable of receiving messages, but not transmitting messages.

RF
Radio Frequency

RFOA
Ready for First Office Application

RMS (Root Mean Square)
Effective value of an alternative wave. For AC, this is numerically equal to DC value of the current with the same heating affect.

RoHS
Restriction of Hazardous Substances regulation

RoW
Rest of World

RRH
Remote RF head consisting of a radio, a receive filter, a transmit amplifier, and a CPRI link to a BBU. The MRO is an RRH. See also BBU and CPRI.

Rx / RX
Receive

S

S-GW
Serving Gateway

SAR (Specific Absorption Rate)
A measure of the rate at which energy is absorbed by the body when exposed to radio frequency energy.

SCMS
Small Cell Management System

Sector
The coverage area within the degree of directionality of the antennas.

DRAFT

DRAFT

SeGW

Security Gateway

Service provider

Customer who purchases switching and Site equipment from system vendors, which, in turn, is provided to end-user subscribers through resellers and distribution channels.

SFP (Small Form-Factor Pluggable)

A compact, hot-pluggable transceiver that interfaces a network device motherboard to a fiber-optic or copper networking cable to support telecommunication and data communications.

SGMII

Serial Gigabit Media Independent Interface

Shield

A housing, screen, sheath, or cover that substantially reduces the coupling of electric, magnetic, or electromagnetic fields into or out of circuits or transmission lines.

Short-term

No more than 96 consecutive hours or 15 days per year.

SIMO

Single input, multiple output. Its transmitter function uses a one antenna, and its receiver function uses two. This scheme reduces the instance of multipath and fading, in particular. Antonyms are MISO (multiple input, single output) and MIMO (multiple input, multiple output).

Single-phase

A circuit in which there is only one sinusoidal voltage variation.

Site

An installation that houses the equipment needed to set up and complete calls on a cellular telephone.

Site preparation

To perform the requirements necessary at the site before installation can begin.

SLA

Service Level Agreement

SMG

System Management Solution

SON

Self-Organizing Network

Specific site

The very spot at which the Metro product will be installed in the venue. See also **Venue**.

DRAFT

DRAFT

SSID

Service Set Identifier

Stranded

Wires twisted together to form a strong flexible cable.

Surge protector

Protective device used to limit surge voltages by discharging or bypassing any unwanted surge current that may enter a building or equipment.

SW

Software

Sweep

To vary the frequency of a signal over a whole band as a means of checking the response of equipment under test.

T

T1

A four-wire voice and data trunking facility that carries 24 duplex channels over 56-kbps time slots.

TCO

Total Cost of Ownership

THHN (Thermoplastic high-heat resistant nylon-coated)

Three-phase

An alternating current supply with three sinusoidal voltages differing in phase by 120°.

THWN (Thermoplastic heat and water resistant nylon-coated)

TN

In a TN earthing system, one of the points in the generator or transformer is connected with earth, usually the star point in a three-phase system. The body of the electrical device is connected with earth by means of this earth connection at the transformer.

TPC

Transmit Power Control

TRDU (Transmit Receive Duplex Unit)

TT

In a TT earthing system, the protective earth connection of the consumer is provided by a local connection to earth, independent of any earth connection at the generator.

DRAFT

DRAFT

Twisted pair cable
Cable made up of one or more separately insulated twisted-wire pairs, none of which is arranged with another to form quads.

Tx / TX
Transmit

TYP (Typical)

U

U-NII
Unlicensed National Information Infrastructure

UBC
Uniform Building Code

UE
User Equipment

UL
Uplink

UL® (Underwriters Laboratories)
Laboratories that test and approve materials and equipment against predetermined performance standards.

UMTS
Universal Mobile Telecommunications System

UV (Ultraviolet)
The portion of the electromagnetic spectrum in which the longest wavelength is just below the visible spectrum, extending from approximately 4 nm to approximately 400 nm. Some authorities place the lower limit of uv at values between 1 and 40 nm, 1 nm being the upper wavelength limit of x-rays. The 400-nm limit is the lowest visible wavelength, that is, the highest visible frequency, violet.

V

V (Volt)
The derived SI unit of electrical potential difference. It is the difference in potential between two points of a conducting wire carrying a constant current of 1 ampere when the power dissipated between these two points is equal to 1 watt.

Vac (Volts Alternating Current)

V_{CC}
An electronics designation that refers to voltage from a power supply connected to the "collector" terminal of a bipolar transistor. Double letters “cc” refer to power supply voltages.

DRAFT

DRAFT

VDC (Volts Direct Current)

Venue
The general area, such as a stadium, enterprise campus, or airport terminal.

VLAN
Virtual Local Area Networks

VoLTE
Voice over LTE

VPN
Virtual Private Network

Vrms (Volts Root Mean Square)

VSWR (Voltage Standing Wave Ratio)
In a transmission line, the ratio of maximum to minimum voltage in a standing wave pattern. The VSWR is a measure of impedance mismatch between the transmission line and its load. The higher the VSWR, the greater the mismatch. The minimum VSWR, that is, that which corresponds to a perfect impedance match, is unity.

W

W (watts)
The derived SI unit of power. It is equivalent to 1 joule per second, or 1 volt-ampere.

W-CDMA / WCDMA
Wideband Code Division Multiple Access

Walk-through
A critical examination of a design or product undertaken to ensure that it is of adequate quality.

Waveform
The characteristic shape of a periodic wave, determined by the frequencies present and their amplitudes and relative phases.

WEEE
Waste Electrical and Electronic Equipment regulation

Wi-Fi
Wireless local area network (WLAN) products that are based on the Institute of Electrical and Electronics Engineers' (IEEE) 802.11 standards. Wi-Fi is a registered trademark of the Wi-Fi Alliance.

WICL
Wireless Internet Command Language

DRAFT

DRAFT

WLAN

Wireless local area network (WLAN) products that are based on the Institute of Electrical and Electronics Engineers' (IEEE) 802.11 standards. Wi-Fi is a registered trademark of the Wi-Fi Alliance.

WMM (9471 WMM)

The Alcatel-Lucent 9471 Wireless Mobility Manager (WMM) is the Serving GPRS Support Node and Mobility Management Entity (SGSN/MME) in the converged wireless packet core network. It performs mobility and session management signaling and packet data switching for GSM, WCDMA, and LTE access networks.

WMM®

Wi-Fi Multimedia™ (WMM®) is a Wi-Fi Alliance® interoperability certification, based on the IEEE 802.11e standard, providing basic QoS features to 802.11 networks.
WMM, is a registered trademark of the Wi-Fi Alliance.

WMS

Wireless Management System

WPS

Wireless Provisioning System

X

x-pol

Cross polarization

DRAFT

Index

Numerics

7705 SAR-O

Ancillary, 2-9

Hardware overview, 2-9

A AC Power

requirements, 3-9

Animal infestation, 3-2

Antenna

RF antenna, 2-8

Antenna requirements

antenna installation, 3-13

cable grounding, 3-13

cables, 3-13

Authority having jurisdiction (AHJ)

definition of, GL-2

B Bracket

pole-mount, 3-14

wall-mount, 3-14

C Cable

requirements on antennas, 3-13

Cell site general information, B-1

Checklist

general, B-2

GPS antenna, B-6

grounding, B-4

power source, B-3

punch list, B-8, B-9

RF antenna, B-5

checklist

site survey, A-3, A-8

venue, A-2

venue survey, A-1

Checklists, xii

Compact Metro Radio Outdoor

connectors, 2-6

Fronthaul, 2-7

physical description, 2-3

power supply, 2-7

product labeling, 2-9

RF antenna, 2-8

status indicators, 2-8

weights and dimensions, 2-3

Connectors, 2-6

Cooling fins, 3-2

DRAFT

DRAFT

D DC Power
requirements, 3-9
Debris, 3-2
Diodes, 3-3
Distance
CMRO from 9926 BBU, 3-14
document support, xiv

F FCC Part 15, 3-3
Fins, 3-2
Flight tables as source of interference, 3-3
Florescent lighting as source of interference, 3-3
Fronthaul, 2-7

G Glossary
Terms, acronyms, and abbreviations, GL-1
Grounding
antenna cable requirements, 3-13
Grounding - product
9768 CMRO module grounding point, 3-12
ancillary items, 3-11
Grounding and lightning protection
codes and standards, 3-10
grounding requirements, 3-10
surge protection requirements, 3-11

H Hardware and ancillary items
9768 CMRO ancillary items, 2-25
9768 CMRO base items, 2-25
Fiber optic cable for daisy chaining, 2-30
Fiber optic cable for fronthaul, 2-29
Grounding, 2-28
Installation kits, 2-26
Power, 2-28
RF antenna, 2-29
SFP modules, 2-28
Solar Shield, 2-30

I Infestation, 3-2
Installation option
Co-located installation, 2-24
Intended audience, xi
Interference, 3-3, 3-3

L Lighting as source of interference, 3-3

P Pair-mount
requirements, 2-23
with daisy chaining, 2-23
without daisy chaining, 2-23
phone numbers
for document support, xiv
Physical description, 2-3
Pole-mount bracket
requirements, 3-14
Power - product
ancillary items, 3-9
Power requirements (AC)
AC power supply, 3-5
Conduit, 3-6
General, 3-5
Line surge protection, 3-6
Power junction box, 3-6
Power requirements (DC)
Conduit, 3-8

DRAFT

DC power supply, 3-7
General, 3-7
Line surge protection, 3-8
Power Junction box, 3-8
Power supply, 2-7
product conformance statements, C-1
Product features and attributes, 2-2
product labeling, 2-9

R Radiated interference, 3-3
Requirements
AC power, 3-9
DC power, 3-9
fiber optic cable run, 3-14
pole mount, 3-14
wall mount, 3-14

S Scattered RF waves, 3-3
Scoreboards as source of interference, 3-3
Security
against rogue RF intrusion, 3-3
against tampering, 3-3
Single mode optical fibers OI codes, 2-13
Site requirements
device placement, 3-4
general requirements, 3-4
Spectrum analysis, 3-3, 3-3
status indicators, 2-8
Supported installation options
9768 CMRO with 7705 SAR-O, 2-16
Daisy chain, 2-21
Standard, 2-15

T typographical conventions
describing, xii

V Video screens as source of interference, 3-3

W Wall-mount bracket
standoff distance, 3-14
Weights and dimensions, 2-3

DRAFT

DRAFT

DRAFT

DRAFT