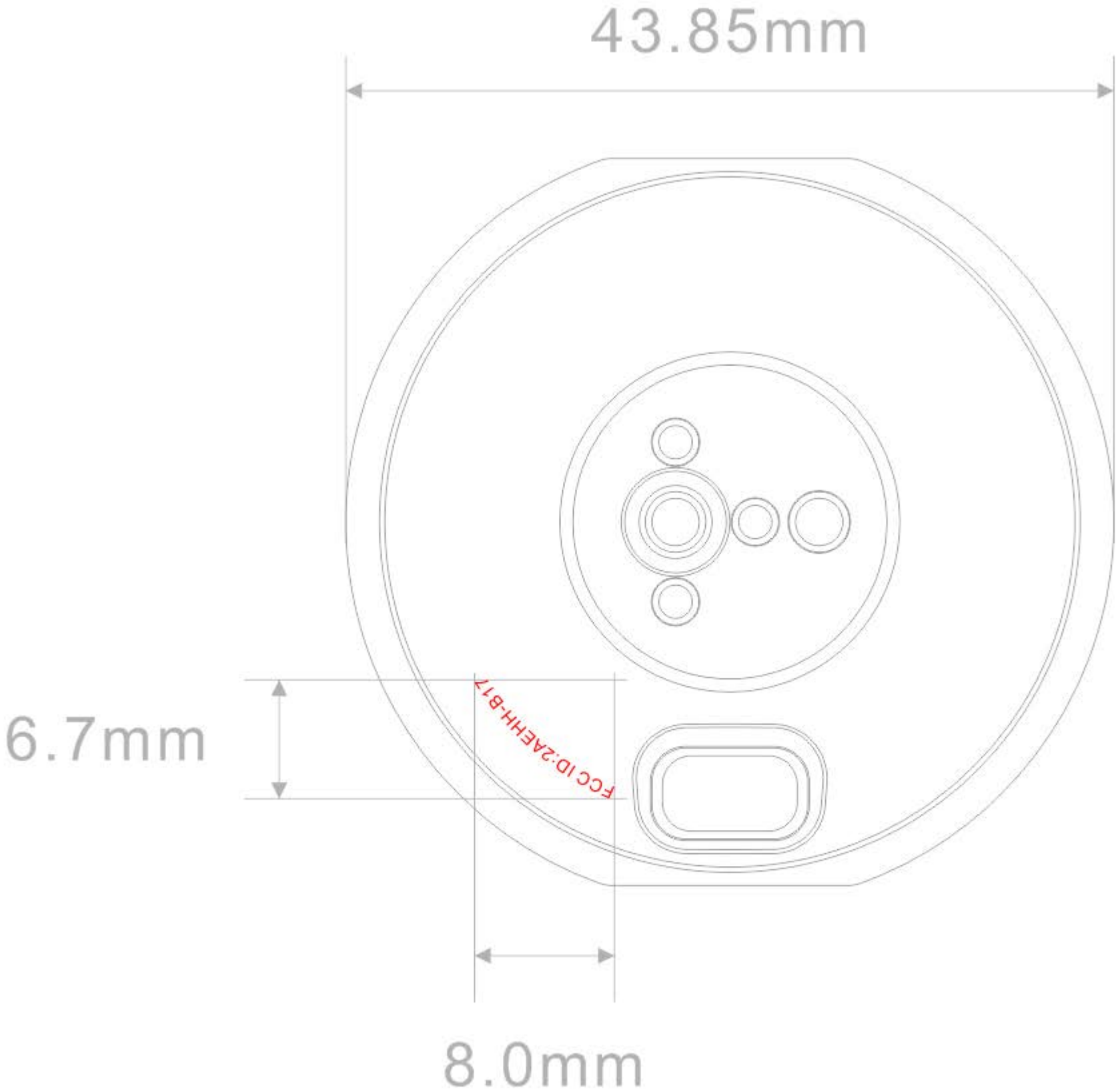
43.85mm
6.7mm
FCC ID:2AEHH-B17
8.0mm