TCT 通测检测
TESTING CENTRE TECHNOLOGY

TEST REPORT

Product: Smart Phone

Model No.: COOL

Trade mark: FTC

Report No.: TCT150331E015

Issued Date: Apr. 17, 2015

Issued for:

FENIX TRADING COMPANY S.A.

1410 Spain Av., La Torre Building 2nd Floor. Asuncion, Paraguay.

Issued By:

Shenzhen Tongce Testing Lab

1F, Leinuo Watch Building, Fuyong Town, Baoan Dist, Shenzhen, China

TEL: +86-755-27673339

FAX: +86-755-27673332

Note: This report shall not be reproduced except in full, without the written approval of Shenzhen Tongce Testing Lab This document may be altered or revised by Shenzhen Tongce Testing Lab personnel only, and shall be noted in the revision section of the document. The test results in the report only apply to the tested sample.

TABLE OF CONTENTS

1. Test Certification 3
2. Test Result Summary 4
3. EUT Description 5
4. Test Methodology 6
4.1. Decision of Final Test Mode 6
4.2. EUT System Operation 6
5. Setup of Equipment under Test 7
5.1. Description of Support Units 7
5.2. Configuration of System Under Test 7
6. Facilities and Accreditations 8
6.1. Facilities 8
6.2. Measurement Uncertainty 8
7. Emission Test 9
7.1. Conducted Emission at Mains Terminals 9
7.2. Radiated Emission 13

1. Test Certification

Product:	Smart Phone
Model No.:	COOL
Applicant:	FENIX TRADING COMPANY S.A.
Address:	1410 Spain Av., La Torre Building 2nd Floor. Asuncion, Paraguay.
Manufacturer:	Shenzhen MOBOT Tech.Co.,Ltd.
Address:	402/402#, Building 211, Terra Trade&Industry Park, Futian District Shenzhen, China
Test Voltage:	AC 120 V/60 Hz
Date of Test:	Mar. 31, 2015~Apr. 17, 2015
Applicable Standards:	47 CFR FCC Part 15 Subpart B: 2014 ANSI C63.4: 2009

The above equipment has been tested by Shenzhen Tongce Testing Lab and found compliance with the requirements set forth in the technical standards mentioned above. The results of testing in this report apply only to the product/system, which was tested. Other similar equipment will not necessarily produce the same results due to production tolerance and measurement uncertainties.

Tested By:	***Lee Liu***	***Date:***	***Apr. 17, 2015***
Check By:	***Davis Zhou***	***Date:***	***Apr. 20, 2015***
Approved By:	***Tomsin***	***Date:***	***Apr. 20, 2015***

2. Test Result Summary

Emission		
Test Method	**Item**	**Result**
FCC 47 CFR Part 15 Subpart B	Conducted Emission at Mains Terminals	Pass
	Radiated Emission	Pass

Note:

1. Pass: Test item meets the requirement.
2. Fail: Test item does not meet the requirement.
3. N/A: Test case does not apply to the test object.
4. The test result judgment is decided by the limit of test standard.
5. The information of measurement uncertainty is available upon the customer's request.

3. EUT Description

Product Name:	Smart Phone
Model No.:	COOL
Product Parameter:	Input: AC 100-240 V, 50/60 Hz
AC Line(PC):	☐Shielded ☒Unshielded, ☒Detachable ☐Un-detachable ☐No applicable ☒Length: 1.2 m
AC Line(Monitor):	☐Shielded ☒Unshielded, ☒Detachable ☐Un-detachable ☐No applicable ☒Length: 1.2 m
AC Line(Printer):	☐Shielded ☒Unshielded, ☒Detachable ☐Un-detachable ☐No applicable ☒Length: 1.2 m
USB Line (PC to EUT):	☐Shielded ☒Unshielded, ☒Detachable ☐Un-detachable ☐No applicable ☒Length: 1.0 m
USB Line (PC to Printer):	☐Shielded ☒Unshielded, ☒Detachable ☐Un-detachable ☐No applicable ☒Length: 0.8 m
USB Line (Mouse):	☐Shielded ☒Unshielded, ☒Detachable ☐Un-detachable ☐No applicable ☒Length: 1.5 m
USB Line (Keyboard):	☐Shielded ☒Unshielded, ☒Detachable ☐Un-detachable ☐No applicable ☒Length: 1.5 m
VGA Line	☐Shielded ☒Unshielded, ☒Detachable ☐Un-detachable ☐No applicable ☒Length: 1.2 m
Earphone Line	☐Shielded ☒Unshielded, ☒Detachable ☐Un-detachable ☐No applicable ☒Length: 1.0 m

4. Test Methodology

4.1. Decision of Final Test Mode

The EUT was tested together with the thereinafter additional components, and a configuration, which produced the worst emission levels, was selected and recorded in this report.
The following test mode(s) were assessed:

Test Mode
Mode 1: Charging + Playing
Mode 2: Data Transmission with PC
Mode 3: Charging + Camera Recording

The following test mode was found to produce the highest emission level.

The Worst Test Mode		
Emission	Conducted Emission	Mode 3: Charging + Camera Recording
	Radiated Emission	Mode 2: Data Transmission with PC

4.2. EUT System Operation

1. Set up EUT with the support equipments.
2. Make sure the EUT work normally during the test.

5. Setup of Equipment under Test

5.1. Description of Support Units

The EUT has been tested as an independent unit together with other necessary accessories or support units. The following support units or accessories were used to form a representative test configuration during the tests.

Equipment	Model No.	Serial No.	FCC ID	Trade Name
PC	BM6620	D1PFCG008HP	/	ASUS
Monitor	VX239	VX239H	/	ASUS
Keyboard	PK1100UE	04G104180039DP	/	ASUS
Printer	L11121E	FE2-2902	/	CANON
Mouse	MOBTUO	04G125610170DP	/	ASUS
Earphone	MX80	/	/	Sennheiser

Note:

1. All the equipment/cables were placed in the worst-case configuration to maximize the emission during the test.
2. Grounding was established in accordance with the manufacturer's requirements and conditions for the intended use.

5.2. Configuration of System Under Test

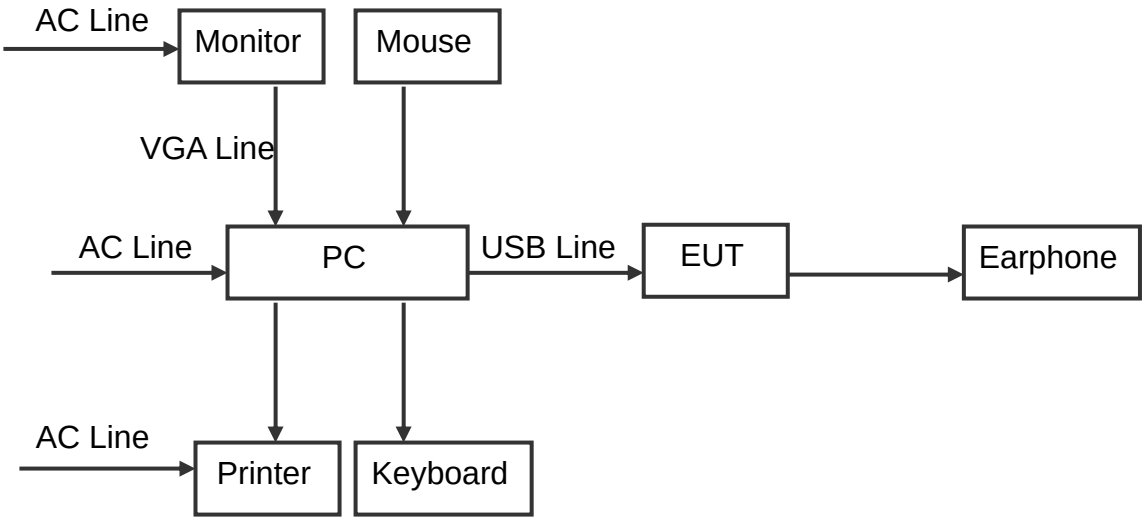

(EUT: Smart Phone)

6. Facilities and Accreditations

6.1. Facilities

All measurement facilities used to collect the measurement data are located at TCT Lab.
The sites are constructed in conformance with the requirements of ANSI C63.4 and CISPR Publication 22. All receiving equipment conforms to CISPR Publication 16-1, "Radio Interference Measuring Apparatus and Measurement Methods."

6.2. Measurement Uncertainty

Where relevant, the following measurement uncertainty levels have been estimated for tests performed on the EUT as specified in CISPR 16-4-2:

No.	Item	MU
1.	Temperature	±0.1℃
2.	Humidity	±1.0 %
3.	Spurious Emissions, Conducted	±2.56 dB
4.	All Emissions, Radiated	±4.28 dB

This uncertainty represents an expanded uncertainty expressed at approximately the 95 % confidence level using a coverage factor of k=2.

7. Emission Test

7.1. Conducted Emission at Mains Terminals

7.1.1. Test Specification

Test Requirement:	FCC 47 CFR Part 15 Subpart B
Test Method:	ANSI C63.4:2009
Frequency Range:	150 kHz to 30 MHz

7.1.2. Limits

Frequency (MHz)	Class B dB(uV)	
	Quasi-peak	Average
0.15 - 0.5	66 – 56[a]	56 – 46[a]
0.50 - 5.0	56	46
5.0 - 30.0	60	50
a. Decreases with the logarithm of the frequency		

7.1.3. Test Instruments

Conducted Emission Shielding Room Test Site (843)				
Equipment	**Manufacturer**	**Model**	**Serial Number**	**Calibration Due**
EMI Test Receiver	R&S	ESCS30	100139	Sep. 16, 2015
LISN	Schwarzbeck	NSLK 8126	8126453	Sep. 29, 2015

Note: The calibration interval of the above test instruments is 12 months and the calibrations are traceable to international system unit (SI).

7.1.4. Test Method

The AMN was placed 0.8 m from the boundary of the unit under test and bonded to a ground reference plane. This distance was between the closest points of the AMN and the EUT. All other units of the EUT and associated equipment was at least 0.8 m from the AMN. All power was connected to the system through Artificial Mains Network (AMN). Conducted voltage measurements on mains lines were made at the output of the AMN

7.1.5. Block Diagram of Test Setup

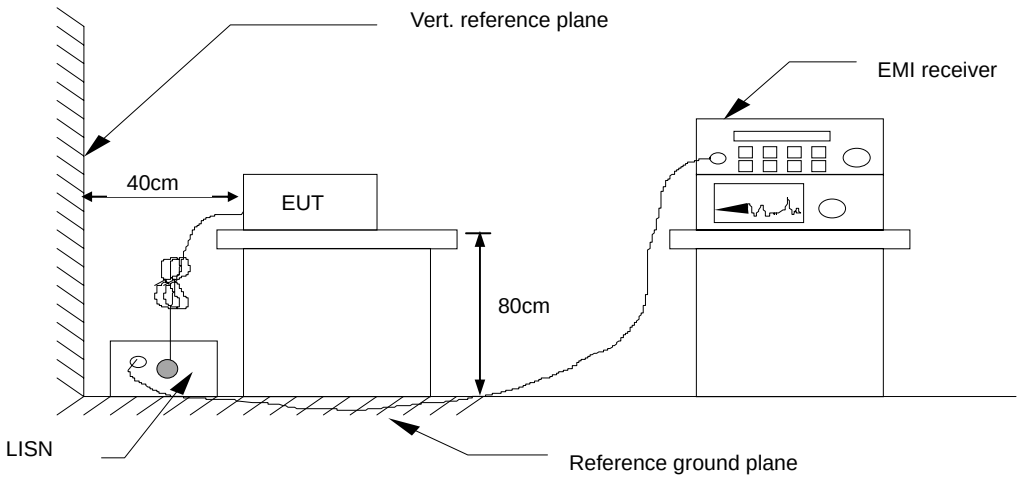

For the actual test configuration, please refer to the related item – Photographs of the Test Configuration.

7.1.6. Test Results

Test Environment:	Temp.:	22 ℃	Humid.:	54 %	Press.:	96 kPa		
Test Mode:	Mode 3							
Test Voltage:	AC 120 V/60 Hz							
Test Result:	Pass							

Note:

L1 = Live Line / N = Neutral Line

"---" denotes the emission level was or more than 2dB below the Average limit, so no re-check anymore.

Freq. = Emission frequency in MHz

Reading level dB(μV) = Receiver reading

Corr. Factor (dB) = Attenuator factor + Cable loss

Level dB(μV) = Reading level dB(μV) + Corr. Factor (dB)

Limit dB(μV) = Limit stated in standard

Margin (dB) = Level dB(μV) – Limits dB(μV)

Q.P. =Quasi-Peak

AVG=Average

Please refer to following diagram for individual

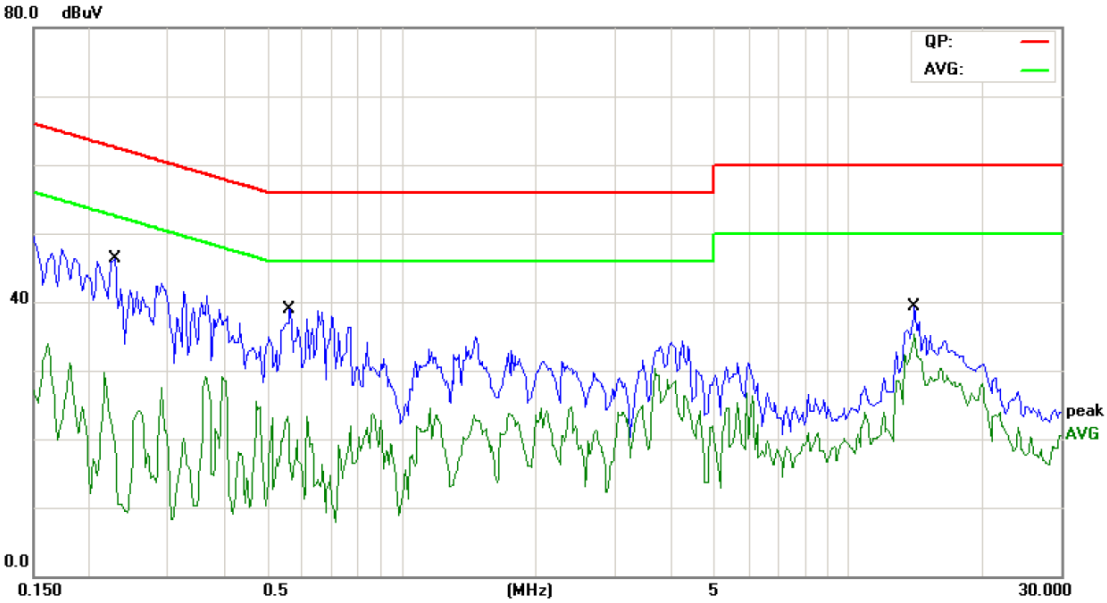

Site Chamber #2 Phase: *L1* Temperature: 22 (C)

Limit: FCC PART15 Conduction(QP) Power: AC 120V/60Hz Humidity: 54 %

EUT: Smart Phone

M/N: COOL

Mode: Charging + Camera Recording

No.	Mk.	Freq.	Reading Level	Correct Factor	Measure-ment	Limit	Over		
		MHz	dBuV	dB	dBuV	dBuV	dB	Detector	Comment
1		14.0742	25.85	11.55	37.40	60.00	-22.60	QP	
2		14.0742	17.63	11.55	29.18	50.00	-20.82	AVG	
3		0.2280	31.86	11.45	43.31	62.52	-19.21	QP	
4		0.2280	22.45	11.45	33.90	52.52	-18.62	AVG	
5		0.5635	23.71	11.27	34.98	56.00	-21.02	QP	
6	*	0.5635	27.71	11.27	38.98	46.00	-7.02	AVG	

Note: Any value more than 10 dB below limit have not been specifically reported.

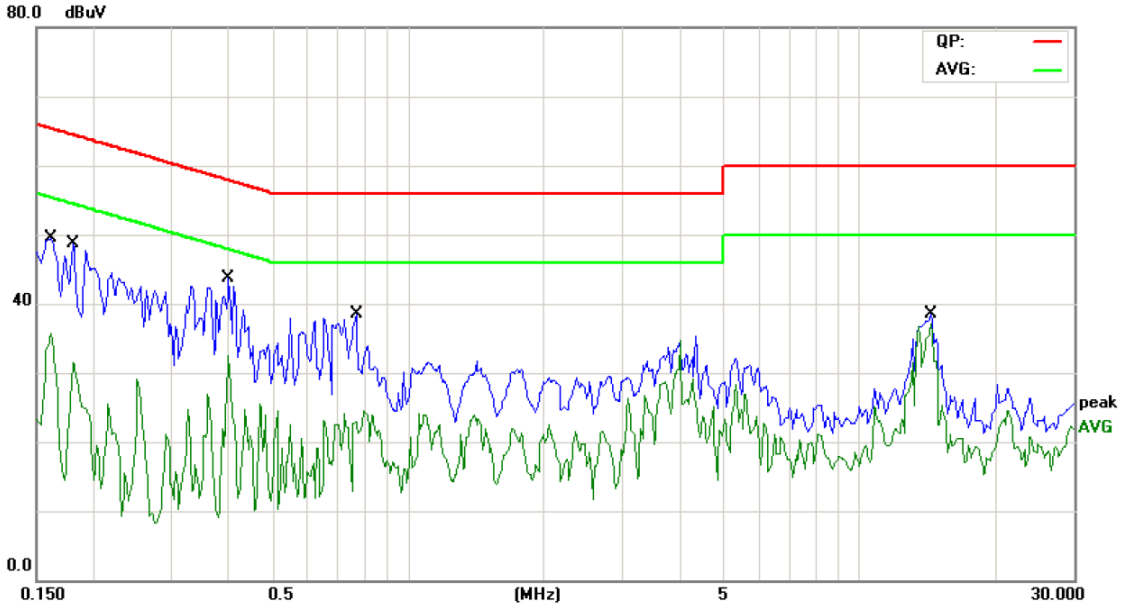

Site Chamber #2 Phase: *N* Temperature: 22 (C)

Limit: FCC PART15 Conduction(QP) Power: AC 120V/60Hz Humidity: 54 %

EUT: Smart Phone

M/N: COOL

Mode: Charging + Camera Recording

No.	Mk.	Freq.	Reading Level	Correct Factor	Measure-ment	Limit	Over		
		MHz	dBuV	dB	dBuV	dBuV	dB	Detector	Comment
1		0.1617	26.50	11.51	38.01	65.37	-27.36	QP	
2		0.1617	3.60	11.51	15.11	55.37	-40.26	AVG	
3		0.1812	34.44	11.50	45.94	64.43	-18.49	QP	
4		0.1812	20.69	11.50	32.19	54.43	-22.24	AVG	
5		0.4000	24.70	11.36	36.06	57.85	-21.79	QP	
6	*	0.4000	18.27	11.36	29.63	47.85	-18.22	AVG	
7		0.7672	22.05	11.21	33.26	56.00	-22.74	QP	
8		0.7672	12.83	11.21	24.04	46.00	-21.96	AVG	
9		14.4688	25.11	11.62	36.73	60.00	-23.27	QP	
10		14.4688	17.67	11.62	29.29	50.00	-20.71	AVG	

Note: Any value more than 10 dB below limit have not been specifically reported.

7.2. Radiated Emission

7.2.1. Test Specification

Test Requirement:	FCC 47 CFR Part 15 Subpart B
Test Method:	ANSI C63.4:2009
Frequency Range:	30 MHz to 1000 MHz
Measurement Distance:	3 m
Antenna Polarization:	Horizontal & Vertical

7.2.2. Limits

Frequency (MHz)	Class B (at 3m)
	dBuV/m
30 ~ 88	40.0
88 ~ 216	43.5
216 ~ 960	46.0
960 ~ 1000	54.0

Note:
1. The lower limit shall apply at the transition frequencies.
2. Emission level dB(μV/m) = 20 log Emission level (μV/m).

7.2.3. Test Instruments

Radiated Emission Test Site (966)				
Name of Equipment	**Manufacturer**	**Model**	**Serial Number**	**Calibration Due**
EMI Test Receiver	R&S	ESVD	100008	Sep. 16, 2015
Spectrum Analyzer	R&S	FSEM	848597-001	Sep. 16, 2015
Amplifier	HP	8447D	2727A05017	Sep. 16, 2015
Amplifier	EM	EM30265	07032613	Sep. 16, 2015
Broadband Antenna	Schwarzbeck	VULB9163	340	Sep. 17, 2015
Horn Antenna	Schwarzbeck	BBHA 9120D	631	Sep. 17, 2015

Note: The calibration interval of the above test instruments is 12 months and the calibrations are traceable to international system unit (SI).

7.2.4. Test Method

Measurements were made in a 3-meter semi-anechoic chamber or Open Area Test Site that complies to CISPR 16. Preliminary (peak) measurements were performed at an antenna to EUT separation distance of 3 meter. The EUT was rotated 360° about its azimuth with the receive antenna located at various heights in horizontal and vertical polarities. Final measurements (quasi-peak) were then performed by rotating the EUT 360° and adjusting the receive antenna height from 1 to 4 m. All frequencies were investigated in both horizontal and vertical antenna polarity, where applicable. Block Diagram of Test Setup.

7.2.5. Block Diagram of Test Setup

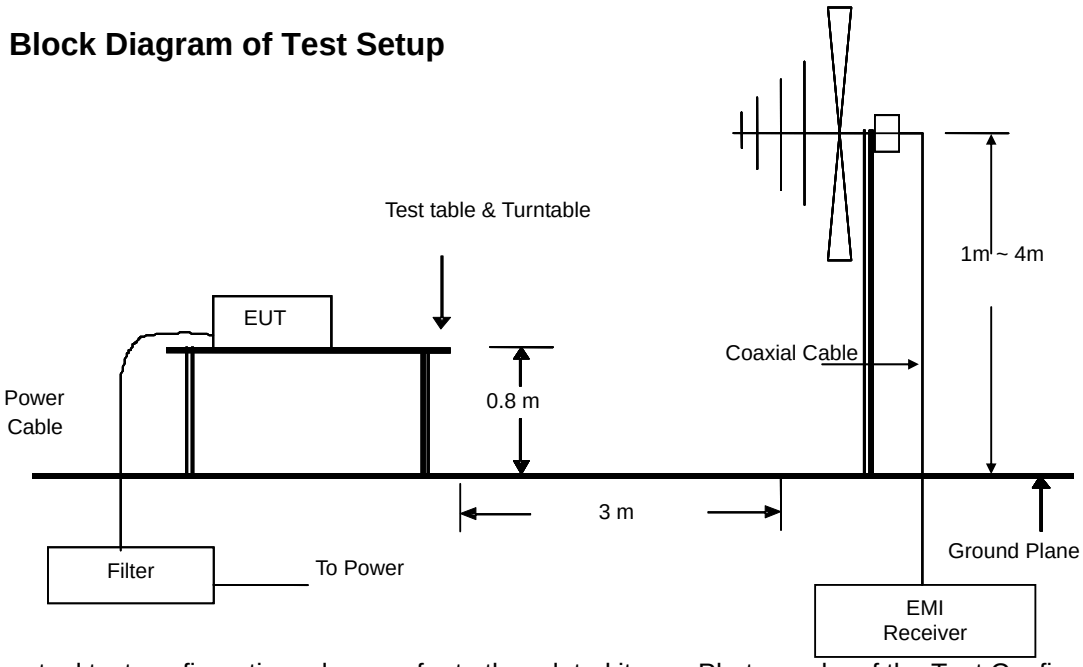

For the actual test configuration, please refer to the related item – Photographs of the Test Configuration

7.2.6. Test Results

Test Environment:	Temp.:	23 ℃	Humid.:	53 %	Press.:	96 kPa		
Test Mode:	Mode 2							
Test Voltage:	AC 120 V/60 Hz							
Test Result:	Pass							

Note:

Freq. = Emission frequency in MHz
Reading level dB(μV) = Receiver reading
Corr. Factor (dB) = Antenna factor + Cable loss
Measurement dB(μV/m) = Reading level dB(μV) + Corr. Factor (dB)
Limit dB(μV/m) = Limit stated in standard
Margin (dB) = Measurement dB(μV/m) – Limits dB(μV/m)
Q.P. =Quasi-Peak

Please refer to following diagram for individual

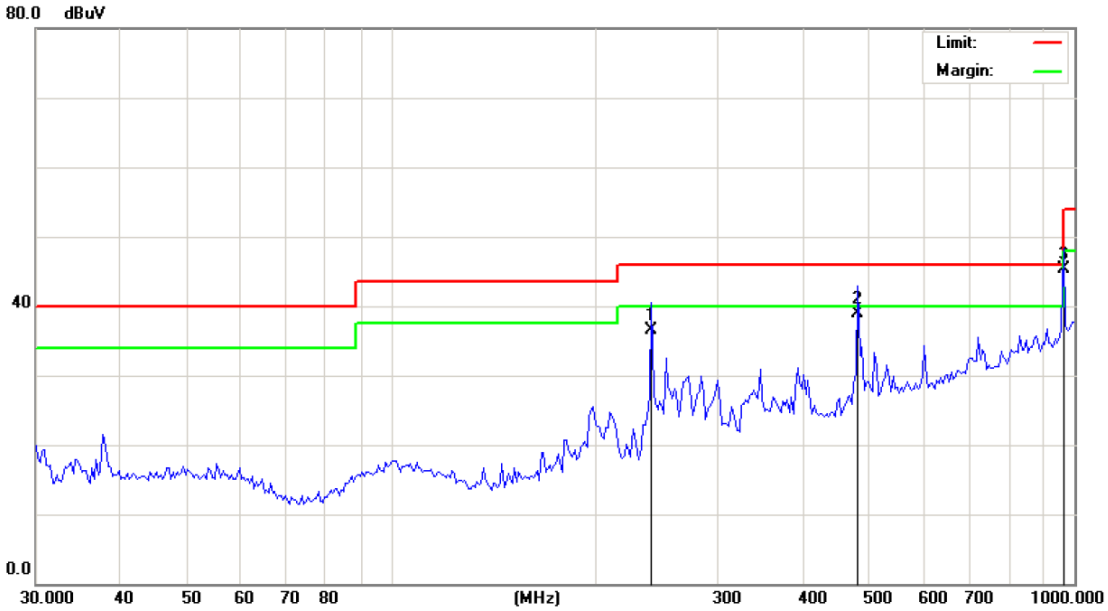

Site		Polarization: ***Horizontal***	Temperature: 23
Limit: FCC Part 15B Class B RE_3 m		Power: AC 120V/60Hz	Humidity: 53 %
EUT: Smart Phone		Distance: 3m	
M/N: COOL			
Mode: Data Transmission with PC			

No.	Mk.	Freq.	Reading Level	Correct Factor	Measure-ment	Limit	Over		Antenna Height	Table Degree	
		MHz	dBuV	dB	dBuV	dBuV	dB	Detector	cm	degree	Comment
1		240.1442	46.83	-10.31	36.52	46.00	-9.48	QP		0	
2	*	481.5110	42.51	-3.56	38.95	46.00	-7.05	QP		0	
3		965.4741	40.45	4.89	45.34	54.00	-8.66	QP		0	

Note: Any value more than 10 dB below limit have not been specifically reported.

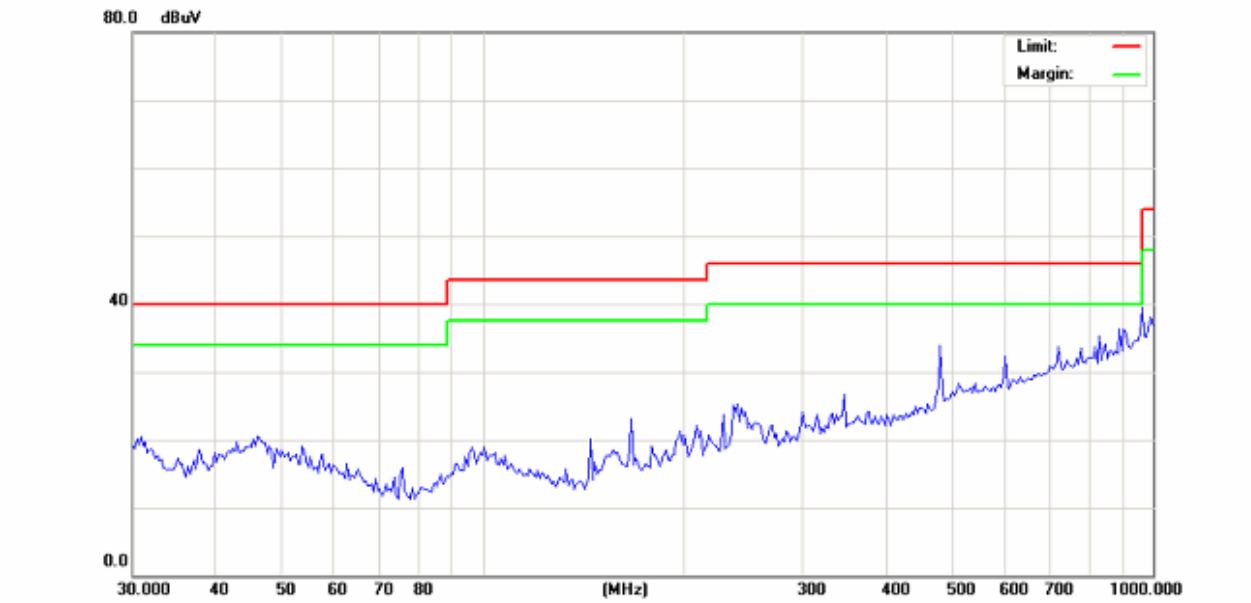

Site	Polarization: *Vertical*	Temperature: 23
Limit: FCC Part 15B Class B RE_3 m	Power: AC 120V/60Hz	Humidity: 53 %
EUT: Smart Phone	Distance: 3m	
M/N: COOL		
Mode: Data Transmission with PC		
Note:		

No.	Mk.	Freq.	Reading Level	Correct Factor	Measure-ment	Limit	Over		Antenna Height	Table Degree	
		MHz	dBuV	dB	dBuV/m	dBuV/m	dB	Detector	cm	degree	Comment

Note: Any value more than 10 dB below limit have not been specifically reported.

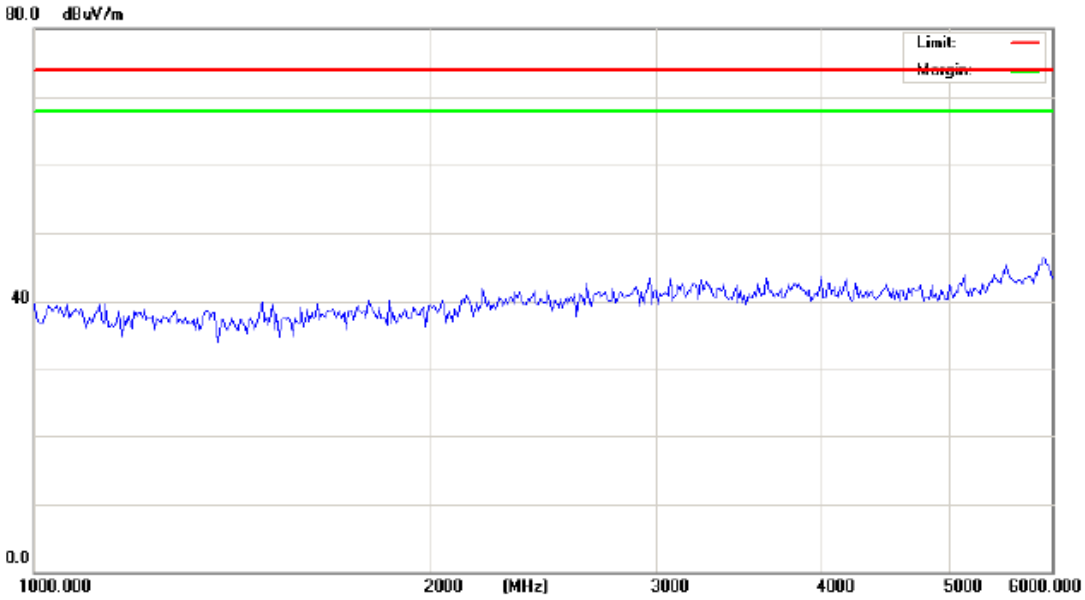

Site
Limit: FCC ABOVE1G
Mode: Data Transmission with PC
Note:

Polarization: *Horizontal*
Power: AC 120V/60Hz

Temperature: 23
Humidity: 53 %

No.	Mk.	Freq.	Reading Level	Correct Factor	Measure-ment	Limit	Over		Antenna Height	Table Degree	
		MHz	dBuV	dB	dBuV/m	dBuV/m	dB	Detector	cm	degree	Comment

Note: Any value more than 10 dB below limit have not been specifically reported.

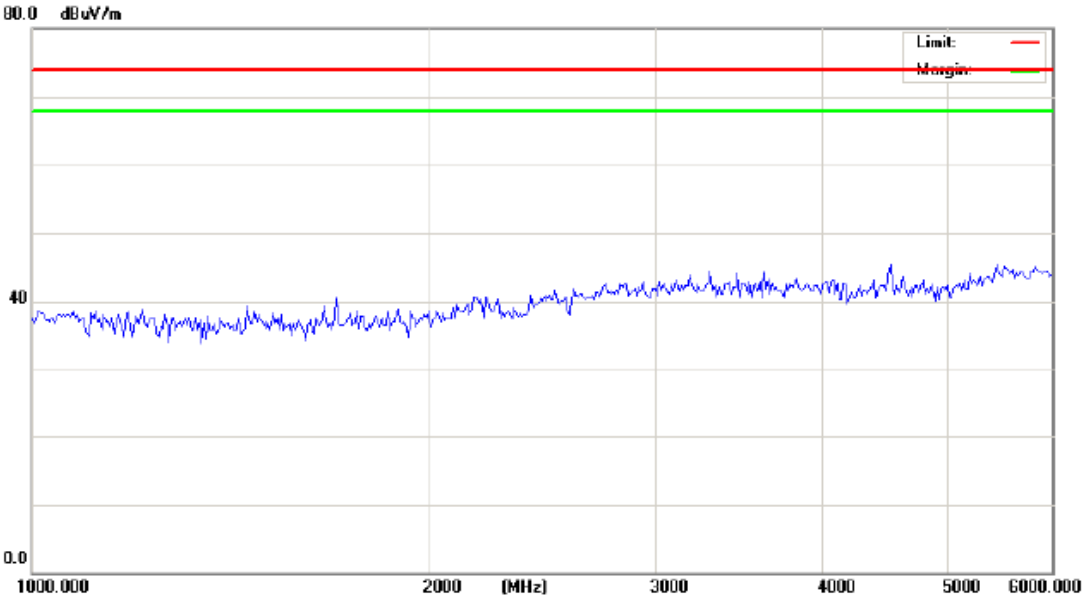

Site | Polarization: *Vertical* | Temperature: 23

Limit: FCC ABOVE1G | Power: AC 120V/60Hz | Humidity: 53 %

Mode: Data Transmission with PC

Note:

No.	Mk.	Freq.	Reading Level	Correct Factor	Measure-ment	Limit	Over		Antenna Height	Table Degree	
		MHz	dBuV	dB	dBuV/m	dBuV/m	dB	Detector	cm	degree	Comment

Note: Any value more than 10 dB below limit have not been specifically reported.

********END OF REPORT********