TAF68E Hardware Design

Automotive Wi-Fi&Bluetooth Module Series

Version: 1.0.1

Date: 2023-11-21

Status: Preliminary

Legal Notices

We offer information as a service to you. The provided information is based on your requirements and we make every effort to ensure its quality. You agree that you are responsible for using independent analysis and evaluation in designing intended products, and we provide reference designs for illustrative purposes only. Before using any hardware, software or service guided by this document, please read this notice carefully. Even though we employ commercially reasonable efforts to provide the best possible experience, you hereby acknowledge and agree that this document and related services hereunder are provided to you on an “as available” basis. We may revise or restate this document from time to time at our sole discretion without any prior notice to you.

Use and Disclosure Restrictions

License Agreements

Documents and information provided by us shall be kept confidential, unless specific permission is granted. They shall not be accessed or used for any purpose except as expressly provided herein.

Copyright

Our and third-party products hereunder may contain copyrighted material. Such copyrighted material shall not be copied, reproduced, distributed, merged, published, translated, or modified without prior written consent. We and the third party have exclusive rights over copyrighted material. No license shall be granted or conveyed under any patents, copyrights, trademarks, or service mark rights. To avoid ambiguities, purchasing in any form cannot be deemed as granting a license other than the normal non-exclusive, royalty-free license to use the material. We reserve the right to take legal action for noncompliance with abovementioned requirements, unauthorized use, or other illegal or malicious use of the material.

Third-Party Rights

This document may refer to hardware, software and/or documentation owned by one or more third parties (“third-party materials”). Use of such third-party materials shall be governed by all restrictions and obligations applicable thereto.

We make no warranty or representation, either express or implied, regarding the third-party materials, including but not limited to any implied or statutory, warranties of merchantability or fitness for a particular purpose, quiet enjoyment, system integration, information accuracy, and non-infringement of any third-party intellectual property rights with regard to the licensed technology or use thereof. Nothing herein constitutes a representation or warranty by us to either develop, enhance, modify, distribute, market, sell, offer for sale, or otherwise maintain production of any our products or any other hardware, software, device, tool, information, or product. We moreover disclaim any and all warranties arising from the course

of dealing or usage of trade.

Privacy Policy

Before data interaction with third parties, please be informed of their privacy and data security policy.

Disclaimer

a) We acknowledge no liability for any injury or damage arising from the reliance upon the information.
b) We shall bear no liability resulting from any inaccuracies or omissions, or from the use of the information contained herein.
c) While we have made every effort to ensure that the functions and features under development are free from errors, it is possible that they could contain errors, inaccuracies, and omissions. Unless otherwise provided by valid agreement, we make no warranties of any kind, either implied or express, and exclude all liability for any loss or damage suffered in connection with the use of features and functions under development, to the maximum extent permitted by law, regardless of whether such loss or damage may have been foreseeable.
d) We are not responsible for the accessibility, safety, accuracy, availability, legality, or completeness of information, advertising, commercial offers, products, services, and materials on third-party websites and third-party resources.

Safety Information

The following safety precautions must be observed during all phases of operation, such as usage, service or repair of any terminal or mobile incorporating the module. Manufacturers of the terminal should notify users and operating personnel of the following safety information by incorporating these guidelines into all manuals of the product. Otherwise, assumes no liability for customers' failure to comply with these precautions.

	Full attention must be paid to driving at all times in order to reduce the risk of an accident. Using a mobile while driving (even with a handsfree kit) causes distraction and can lead to an accident. Please comply with laws and regulations restricting the use of wireless devices while driving.
	Switch off the terminal or mobile before boarding an aircraft. The operation of wireless appliances in an aircraft is forbidden to prevent interference with communication systems. If there is an Airplane Mode, it should be enabled prior to boarding an aircraft. Please consult the airline staff for more restrictions on the use of wireless devices on an aircraft.
	Wireless devices may cause interference on sensitive medical equipment, so please be aware of the restrictions on the use of wireless devices when in hospitals, clinics or other healthcare facilities.
	Terminals or mobiles operating over radio signal and cellular network cannot be guaranteed to connect in certain conditions, such as when the mobile bill is unpaid or the (U)SIM card is invalid. When emergent help is needed in such conditions, use emergency call if the device supports it. In order to make or receive a call, the terminal or mobile must be switched on in a service area with adequate cellular signal strength. In an emergency, the device with emergency call function cannot be used as the only contact method considering network connection cannot be guaranteed under all circumstances.
	The terminal or mobile contains a transceiver. When it is ON, it receives and transmits radio frequency signals. RF interference can occur if it is used close to TV sets, radios, computers or other electric equipment.
	In locations with explosive or potentially explosive atmospheres, obey all posted signs and turn off wireless devices such as mobile phone or other terminals. Areas with explosive or potentially explosive atmospheres include fuelling areas, below decks on boats, fuel or chemical transfer or storage facilities, and areas where the air contains chemicals or particles such as grain, dust or metal powders.

Contents

Safety Information **3**

Table Index **6**

Figure Index **7**

1 Introduction **8**

2 Product Overview **9**
2.1. General Description 9
2.2. Key Features 9
2.3. EVB Kit 12
2.4. Pin Assignment 12
2.5. Pin Description 13

3 Operating Characteristics **17**
3.1. Power Supply 17
3.1.1. Power Supply Pins 17
3.1.2. Reference Design for Power Supply 17
3.1.3. Timing of Power Up and Power Down 19

4 Application Interfaces **20**
4.1. Wi-Fi Application Interfaces 20
4.1.1. WLAN_EN 20
4.1.2. PCIe Interface 21
4.2. Bluetooth Application Interfaces 22
4.2.1. BT_EN 22
4.2.2. Bluetooth UART 23
4.2.3. PCM Interface 24
4.3. Other Interfaces 24
4.3.1. Coexistence Interface 24
4.3.2. WLAN_SLP_CLK 25
4.3.3. SW_CTRL 26

5 RF Specifications **27**
5.1. RF Antenna 27
5.1.1. Antenna Interfaces & Frequency Bands 27
5.1.2. Reference Design 28
5.2. RF Performances 29
5.2.1. Conducted RF Performance of Wi-Fi 29
5.2.1.1. Transmitting Power 29
5.2.1.2. Receiver Sensitivity 31
5.2.2. Bluetooth Performances 33
5.3. RF Routing Guidelines 33
5.4. Antenna Design Requirements 35

5.5. RF Connector Recommendation 36

6 Electrical Characteristics & Reliability 37
6.1. Absolute Maximum Ratings 37
6.2. Power Supply Ratings 37
6.3. Power Consumption 38
6.3.1. Wi-Fi Power Consumption 38
6.3.2. Bluetooth Power Consumption 39
6.4. Digital I/O Characteristics 39
6.5. ESD Protection 40
6.6. Operating and Storage Temperatures 40
6.7. Thermal Dissipation 41

7 Mechanical Information 43
7.1. Mechanical Dimensions 43
7.2. Recommended Footprint 45
7.3. Top and Bottom Views 46

8 Storage, Manufacturing & Packaging 47
8.1. Storage Conditions 47
8.2. Manufacturing and Soldering 48
8.3. Packaging Specification 50
8.3.1. Carrier Tape 50
8.3.2. Plastic Reel 51
8.3.3. Mounting Direction 51
8.3.4. Packaging Process 52

9 Appendix References 53

Table Index

Table 1: Basic Information 9
Table 2: Key Features 9
Table 3: Parameter Definition 13
Table 4: Pin Description 13
Table 5: Pin Definition of Power Supply and GND Pins 17
Table 6: Pin Description of WLAN_EN 20
Table 7: Pin Definition of PCIe Interface 21
Table 8: Pins Description of BT_EN 23
Table 9: Pin Description of Bluetooth UART 23
Table 10: Pin Description of PCM Interface 24
Table 11: Pin Description of Coexistence Interface 24
Table 12: Pin Description of WLAN_SLP_CLK 25
Table 13: Parameter Recommendation 25
Table 14: Pin Definition of SW_CTRL 26
Table 15: Pin Definition of RF Antenna Interfaces 27
Table 16: Operating Frequencies (Unit: GHz) 27
Table 17: Conducted RF Output Power at 2.4 GHz (Unit: dBm) 29
Table 18: Conducted RF Output Power at 5 GHz (Unit: dBm) 29
Table 19: Conducted RF Output Power at 6 GHz (Unit: dBm) 30
Table 20: Conducted RF Receiver Sensitivity at 2.4 GHz (Unit: dBm) 31
Table 21: Conducted RF Receiver Sensitivity at 5 GHz (Unit: dBm) 31
Table 22: Conducted RF Receiver Sensitivity at 6 GHz (Unit: dBm) 32
Table 23: Conducted RF Performances (Unit: dBm) 33
Table 24: Antenna Design Requirements 35
Table 25: Power Supply Ratings (Unit: V) 37
Table 26: Module Power Supply Ratings (Unit: V) 37
Table 27: Wi-Fi Tx Power Consumption in Non-signaling Mode (Unit: mA) 38
Table 28: Bluetooth Tx Power Consumption in Non-signalling Mode (Unit: mA) 39
Table 29: VDD_IO I/O Requirements 39
Table 30: ESD Characteristics (Temperature: 25－30 ° C, Humidity: 40 ±5 %; Unit: kV) 40
Table 31: Operating and Storage Temperatures (Unit: ° C) 40
Table 32: Recommended Thermal Profile Parameters 49
Table 33: Carrier Tape Dimension Table (Unit: mm) 50
Table 34: Plastic Reel Dimension Table (Unit: mm) 51
Table 35: Terms and Abbreviations 53

Figure Index

Figure 1: Pin Assignment (Top View) 12
Figure 2: Reference Circuit for VDD_CORE_VL, VDD_CORE_VM, VDD_CORE_VH and VDD_IO 18
Figure 3: Reference Circuit for VDD_PA_A 18
Figure 4: Reference Circuit for VDD_PA_B 19
Figure 5: Timing of Power Up and Power Down 19
Figure 6: Wi-Fi Application Interface Connection 20
Figure 7: PCIe Interface Connection 21
Figure 8: Bluetooth Application Interface Connection 22
Figure 9: Bluetooth UART Connection 23
Figure 10: PCM Interface Connection 24
Figure 11: Coexistence Interface Connection 25
Figure 12: SW_CTRL Connection 26
Figure 13: Reference Design for RF Antenna Interfaces 28
Figure 14: Reference Circuit for RF Antenna Interfaces (Vehicle Applications) 28
Figure 15: Microstrip Design on a 2-layer PCB 34
Figure 16: Coplanar Waveguide Design on a 2-layer PCB 34
Figure 17: Coplanar Waveguide Design on a 4-layer PCB (Layer 3 as Reference Ground) 34
Figure 18: Coplanar Waveguide Design on a 4-layer PCB (Layer 4 as Reference Ground) 34
Figure 19: Description of the HFM Connector 36
Figure 20: Heatsink Design Example 42
Figure 21: Top and Side Dimensions 43
Figure 22: Bottom Dimensions (Bottom View) 44
Figure 23: Recommended Footprint 45
Figure 24: Top and Bottom Views 46
Figure 25: Recommended Reflow Soldering Thermal Profile 48
Figure 26: Carrier Tape Dimension Drawing (Unit: mm) 50
Figure 27: Plastic Reel Dimension Drawing 51
Figure 28: Mounting Direction 51
Figure 29: Packaging Process 52

1 Introduction

This document defines TAF68E and describes its air interfaces and hardware interfaces connected to your applications. It informs you of the interface and RF specifications, electrical and mechanical details, as well as other related information of the module.

With the application notes and user guides provided separately, you can easily use the module to design and set up mobile applications.

This document defines the TAF68E module and describes its air interface and hardware interfaces which are connected with your applications.

With this document, you can quickly understand module interface specifications, electrical and mechanical details, as well as other related information of the module. The document, coupled with application notes and user guides, makes it easy to design and set up mobile applications with the module.

This document describes its air interfaces and hardware interfaces which relate to your applications.

It can help you quickly understand interface specifications, electrical and mechanical details, as well as other related information of the module. Associated with application notes and user guides, you can use this module to design and to set up mobile applications easily.

The device use senario will be like below:
The device will be a client-only device that connect to a access point either in the garage or in an open parking lot where there is access point coverage;
The device will only be used when the car in parking mode. It will be turned off when the car in driving mode.
In Summary, our use senario will be either like an indoor client (6XD) when the car is parked in the Garage, or a standard client (6FX) when the car is parked in outdoor parking lot.

2 Product Overview

2.1. General Description

TAF68E is an automotive grade Wi-Fi and Bluetooth module with low power consumption. It complies with IEEE 802.11a/b/g/n/ac/ax 2.4 GHz & 5 GHz/6 GHz WLAN standards and Bluetooth 5.3 standard, which enables seamless integration of Wi-Fi and Bluetooth Low Energy technologies.

It supports a low-power PCIe Gen 3 interface for Wi-Fi application and a UART and a PCM interface for Bluetooth application, and it also supports LTE & Wi-Fi/Bluetooth coexistence interface.

Table 1: Basic Information

TAF68E	
Footprint	LGA
Pin counts	112
Dimensions	(23 ±0.2) mm × (23 ±0.2) mm × (3 ±0.2) mm
Weight	Approx. 3.39 g

2.2. Key Features

Table 2: Key Features

Parameter	Detail
Power Supplies	**VDD_CORE_VL:** ● 0.9–1.2 V ● Typ.: 0.95 V **VDD_CORE_VM:** ● 1.30–1.42 V ● Typ.: 1.35 V **VDD_CORE_VH:** ● 1.85–2.0 V

	● Typ.: 1.9 V **VDD_PA_A:** ● 3.3–4.8 V ● Typ.: 3.85 V **VDD_PA_B:** ● 1.71–2.1 V ● Typ.: 1.8 V **VDD_IO:** ● 1.71–1.89 V ● Typ.: 1.8 V
Frequency Ranges	**Wi-Fi:** ● 2.4 GHz: 2.400–2.4835 GHz ● 5 GHz: 5.150–5.850 GHz ● 6 GHz: 5.925–7.125 GHz **Bluetooth:** ● 2.400–2.4835 GHz
Wi-Fi Transmission Data Rates	● 802.11b: 1 Mbps, 2 Mbps, 5.5 Mbps, 11 Mbps ● 802.11a/g: 6 Mbps, 9 Mbps, 12 Mbps, 18 Mbps, 24 Mbps, 36 Mbps, 48 Mbps, 54 Mbps ● 802.11n: HT20 (MCS 0–7), HT40 (MCS 0–7) ● 802.11ac: VHT20 (MCS 0–8), VHT40 (MCS 0–9), VHT80 (MCS 0–9), VHT160 (MCS 0–9) ● 802.11ax: HE20 (MCS 0–11), HE40 (MCS 0–11), HE80 (MCS 0–11), HE160 (MCS 0–11)
Wi-Fi Transmitting Power	**2.4 GHz:** ● 802.11b @ 11 Mbps: 16.5 dBm ● 802.11g @ 54 Mbps: 13.5 dBm ● 802.11n @ HT20 MCS 7: 12.5 dBm ● 802.11n @ HT40 MCS 7: 12.0 dBm ● 802.11ax @ HE20 MCS 11: 11.0 dBm ● 802.11ax @ HE40 MCS 11: 9.5 dBm **5 GHz:** ● 802.11a @ 54 Mbps: 13.5 dBm ● 802.11n @ HT20 MCS 7: 12.5 dBm ● 802.11n @ HT40 MCS 7: 12.0 dBm ● 802.11ac @ VHT20 MCS 8: 12.5 dBm ● 802.11ac @ VHT40 MCS 9: 12.0 dBm ● 802.11ac @ VHT80 MCS 9: 11.5 dBm ● 802.11ac @ VHT160 MCS 9: 11.0 dBm ● 802.11ax @ HE20 MCS 11: 11.5 dBm ● 802.11ax @ HE40 MCS 11: 11.0 dBm ● 802.11ax @ HE80 MCS 11: 10.5 dBm ● 802.11ax @ HE160 MCS 11: 9.5 dBm **6 GHz:**

	● 802.11ax @ HE20 MCS 11: 10.5 dBm ● 802.11ax @ HE40 MCS 11: 10.0 dBm ● 802.11ax @ HE80 MCS 11: 9.5 dBm ● 802.11ax @ HE160 MCS 11: 8.5 dBm
Protocol Features	● IEEE 802.11a/b/g/n/ac/ax ● Bluetooth 5.3
Wi-Fi Modulations	BPSK, QPSK, CCK, 16QAM, 64QAM, 256QAM and 1024QAM
Bluetooth Modulations	GFSK, 8-DPSK and π/4-DQPSK
Wi-Fi Operating Modes	● AP ● STA
Wireless Application Interfaces	● Wi-Fi: PCIe Gen 3 interface used for Wi-Fi function ● Bluetooth: UART and PCM interfaces used for Bluetooth function
Antenna Interfaces	● Wi-Fi & Bluetooth antenna interfaces ● 50 Ω characteristic impedance
Operating Temperature	● Operating Temperature Range: -40 °C to +85 °C [1] ● Storage temperature range: -40 °C to +95 °C
RoHS	All hardware components are fully compliant with EU RoHS directive.

[1] Within operation temperature range, the module's related performance meets IEEE and Bluetooth specifications.

2.3. EVB Kit

We will supplies an evaluation board (V2X&5G-EVB) with accessories to develop and test the module. For more details, see ***document 0***.

2.4. Pin Assignment

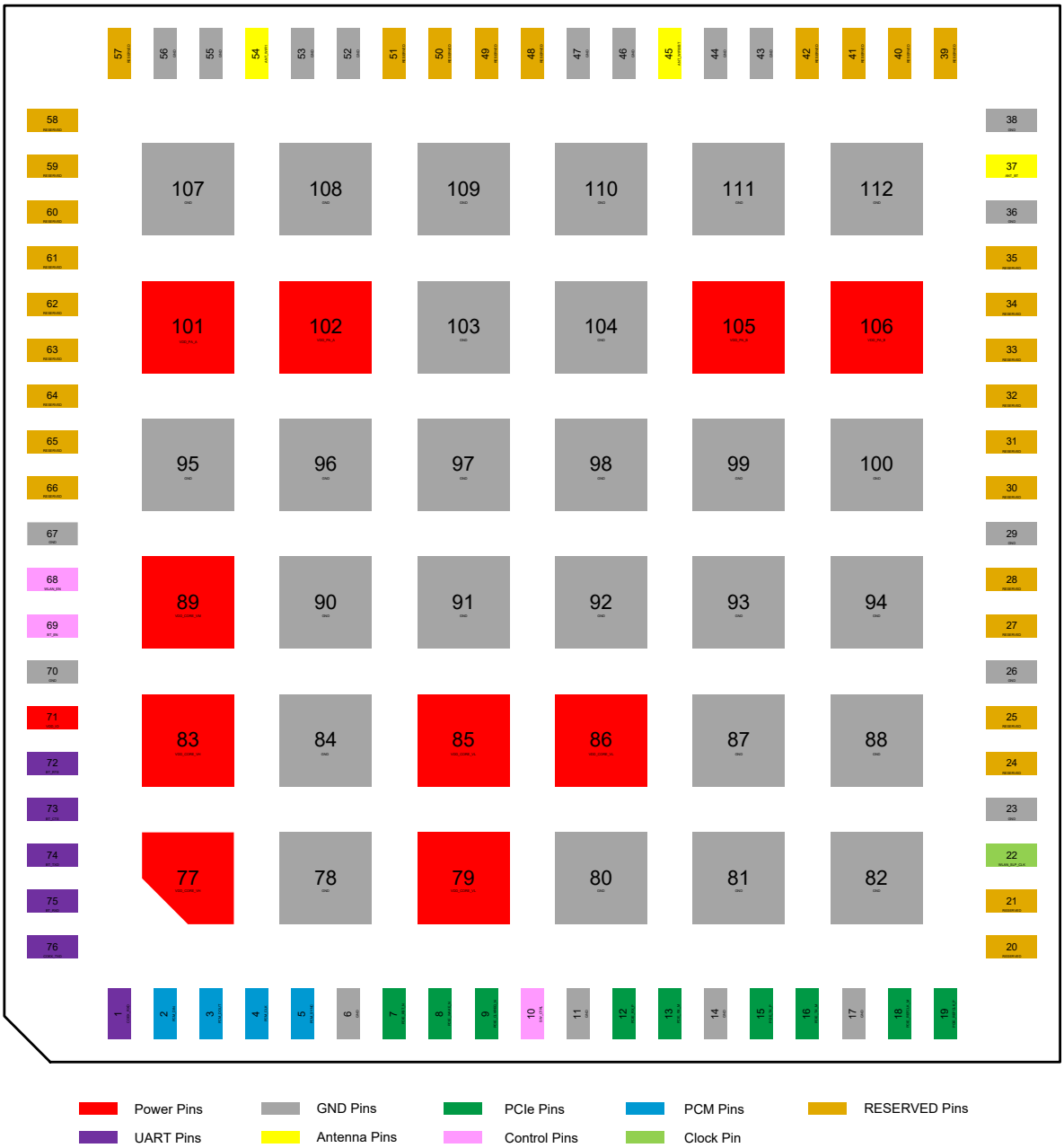

Figure 1: Pin Assignment (Top View)

NOTE

1. Keep all RESERVED and unused pins unconnected.
2. All GND pins should be connected to ground.

2.5. Pin Description

Table 3: Parameter Definition

Parameter	Description
AI	Analog Input
AO	Analog Output
AIO	Analog Input/Output
DI	Digital Input
DO	Digital Output
OD	Open Drain
PI	Power Input

DC characteristics include power domain and rated current.

Table 4: Pin Description

Power Supply					
Pin Name	**Pin No.**	**I/O**	**Description**	**DC Characteristic**	**Comment**
VDD_CORE_VL	79, 85, 86	PI	Voltage for core (low voltage)	Vmin = 0.9 V Vnom = 0.95 V Vmax = 1.2 V	It must be provided with sufficient current up to 1175 mA.
VDD_CORE_VM	89	PI	Voltage for core (medium voltage)	Vmin = 1.30 V Vnom = 1.35 V Vmax = 1.42 V	It must be provided with sufficient current up to 440 mA.
VDD_CORE_VH	77, 83	PI	Voltage for core (high voltage)	Vmin = 1.85 V Vnom = 1.9 V Vmax = 2.0 V	It must be provided with sufficient current up to 245 mA.

VDD_IO	71	PI	Power supply for the module's I/O pins	Vmin = 1.71 V Vnom = 1.8 V Vmax = 1.89 V	It must be provided with sufficient current up to 50 mA.
VDD_PA_A	101, 102	PI	Power supply for the module's RF part	Vmin = 3.3 V Vnom = 3.85 V Vmax = 5.0 V	It must be provided with sufficient current up to 1.2 A.
VDD_PA_B	105, 106	PI		Vmin = 1.71 V Vnom = 1.8 V Vmax = 2.1 V	It must be provided with sufficient current up to 1150 mA.
GND	6, 11, 14, 17, 23, 26, 29, 36, 38, 43, 44, 46, 47, 52, 53, 55, 56, 67, 70, 78, 80–82, 84, 87, 88, 90–100, 103, 104, 107–112				
Bluetooth Application Interfaces					
Pin Name	**Pin No.**	**I/O**	**Description**	**DC Characteristic**	**Comment**
PCM_DIN	2	DI	PCM data input	VDD_IO	
PCM_SYNC	5	DI	PCM data frame sync		
PCM_CLK	4	DI	PCM clock		
PCM_DOUT	3	DO	PCM data output		
BT_TXD	74	DO	Bluetooth UART transmit		
BT_RXD	75	DI	Bluetooth UART receive		
BT_RTS	72	DO	Request to send signal from the module		
BT_CTS	73	DI	Clear to send signal to the module		
Wi-Fi Application Interfaces					
Pin Name	**Pin No.**	**I/O**	**Description**	**DC Characteristic**	**Comment**
PCIE_REFCLK_P	19	AI	PCIe reference clock (+)		Require differential impedance of 85 Ω.
PCIE_REFCLK_M	18	AI	PCIe reference clock (-)		
PCIE_TX_P	15	AO	PCIe transmit (+)		
PCIE_TX_M	16	AO	PCIe transmit (-)		

PCIE_RX_P	12	AI	PCIe receive (+)		
PCIE_RX_M	13	AI	PCIe receive (-)		
PCIE_CLKREQ_N	9	OD	PCIe clock request	VDD_IO	
PCIE_WAKE_N	8	OD	PCIe wakes up host		
PCIE_RST_N	7	DI	PCIe reset		
Control Signals					
Pin Name	**Pin No.**	**I/O**	**Description**	**DC Characteristic**	**Comment**
WLAN_EN	68	DI	Wi-Fi function enable control	VDD_IO	Reserve a 100 kΩ external weak pull-down resistor. Active high.
BE_EN	69	DI	Bluetooth enable control	VDD_IO	Reserve a 100 kΩ external weak pull-down resistor. Active high.
SW_CTRL	10	DO	Control PMIC output	VDD_IO	Control PMIC output. If unused, keep it open.
Coexistence Interface					
Pin Name	**Pin No.**	**I/O**	**Description**	**DC Characteristic**	**Comment**
COEX_TXD	76	DO	LTE & Wi-Fi/ Bluetooth coexistence transmit	VDD_IO	If unused, keep them open.
COEX_RXD	1	DI	LTE & Wi-Fi/ Bluetooth coexistence receive		
Clock Interface					
Pin Name	**Pin No.**	**I/O**	**Description**	**DC Characteristic**	**Comment**
WLAN_SLP_CLK	22	DI	Wi-Fi sleep clock	VDD_IO	The module is unable to boot up and work without sleep clock.
RF Antenna Interfaces					

Pin Name	Pin No.	I/O	Description	DC Characteristic	Comment
ANT_WIFI0/BT	45	AIO	Wi-Fi 0/Bluetooth antenna interface		50 Ω characteristic impedance.
ANT_WIFI1	54	AIO	Wi-Fi 1 antenna interface		
ANT_BT	37	AIO	Reserved dedicated Bluetooth antenna interface		
RESERVED Pins					
Pin Name	**Pin No.**				**Comment**
RESERVED	20, 21, 24, 25, 27, 28, 30–35, 39–42, 48–51, 57–66				Keep them open.

3 Operating Characteristics

3.1. Power Supply

3.1.1. Power Supply Pins

The following table shows the power supply pins and the ground pins of the module. It is recommended to power the VDD_IO by VDD_EXT of the host.

Table 5: Pin Definition of Power Supply and GND Pins

Pin Name	Pin No.	I/O	Description	Comment
VDD_CORE_VL	79, 85, 86	PI	Voltage for core (low voltage)	It must be provided with sufficient current up to 1175 mA.
VDD_CORE_VM	89	PI	Voltage for core (medium voltage)	It must be provided with sufficient current up to 440 mA.
VDD_CORE_VH	77, 83	PI	Voltage for core (high voltage)	It must be provided with sufficient current up to 245 mA.
VDD_IO	71	PI	Power supply for the module's I/O pins	It must be provided with sufficient current up to 50 mA.
VDD_PA_A	101, 102	PI	Power supply for the module's RF part	It must be provided with sufficient current up to 1.2 A.
VDD_PA_B	105, 106	PI		It must be provided with sufficient current up to 1150 mA.
GND	6, 11, 14, 17, 23, 26, 29, 36, 38, 43, 44, 46, 47, 52, 53, 55, 56, 67, 70, 78, 80–82, 84, 87, 88, 90–100, 103, 104, 107–112			

3.1.2. Reference Design for Power Supply

The module is powered by VDD_CORE_VL, VDD_CORE_VM, VDD_CORE_VH and VDD_IO. These power supplies of the module can be powered by AG5xx series modules. The following figure shows the reference design for these power pins which are powered by AG5xx series modules.

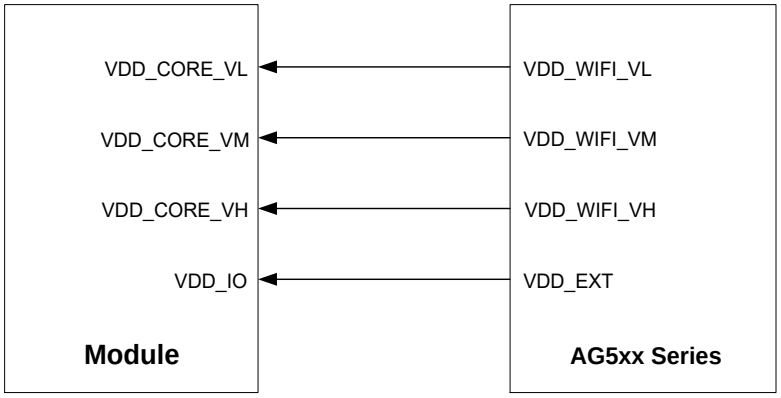

Figure 2: Reference Circuit for VDD_CORE_VL, VDD_CORE_VM, VDD_CORE_VH and VDD_IO

VDD_CORE_VL, VDD_CORE_VM, VDD_CORE_VH and VDD_IO can also be powered by independent power supply chips. VDD_CORE_VL is recommended to use a power supply chip with the maximum output current exceeding 1175 mA. VDD_CORE_VM is recommended to use a power supply chip with the maximum output current exceeding 440 mA. VDD_CORE_VH is recommended to use a power supply chip with the maximum output current exceeding 245 mA. VDD_IO is recommended to use a power supply chip with maximum output current exceeding 50 mA.

The RF part of the module is powered by VDD_PA_A and VDD_PA_B. VDD_PA_A is recommended to use a power supply chip with maximum output current exceeding 1.2 A. VDD_PA_B is recommended to use a power supply chip with maximum output current exceeding 1150 mA. The following figure shows a reference design for VDD_PA_A and VDD_PA_B which are controlled by WLAN_PWR_EN1 of the host.

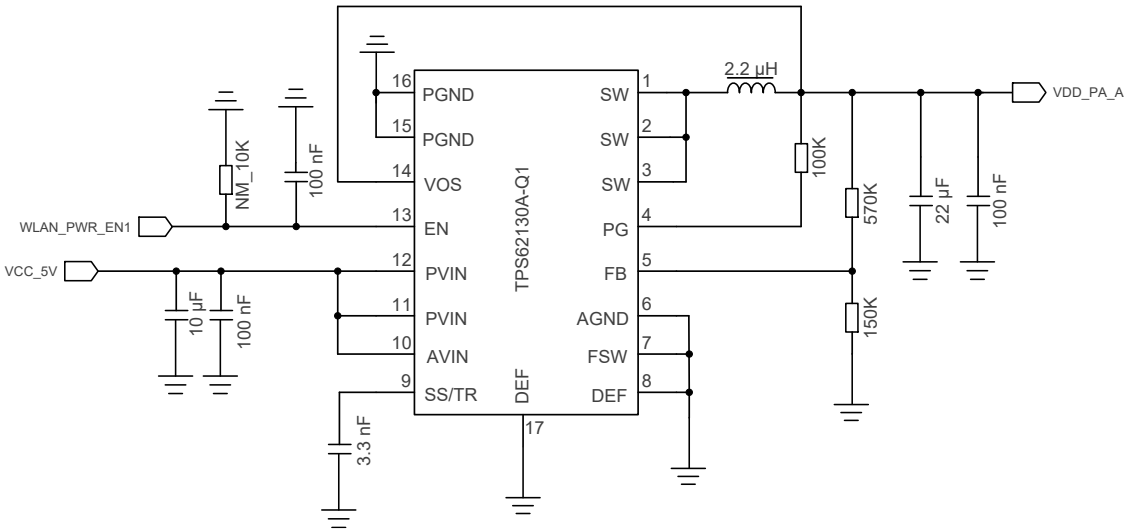

Figure 3: Reference Circuit for VDD_PA_A

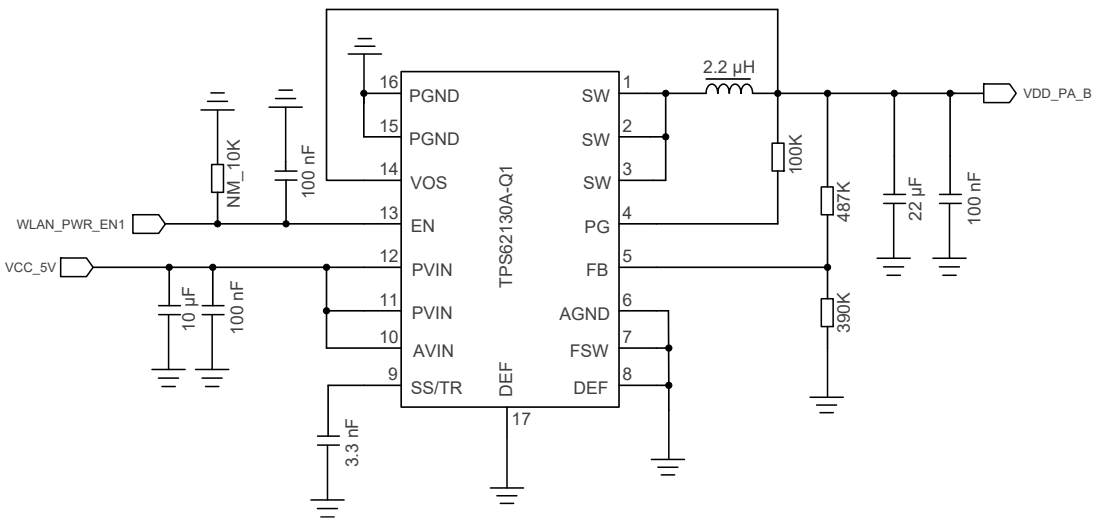

Figure 4: Reference Circuit for VDD_PA_B

3.1.3. Timing of Power Up and Power Down

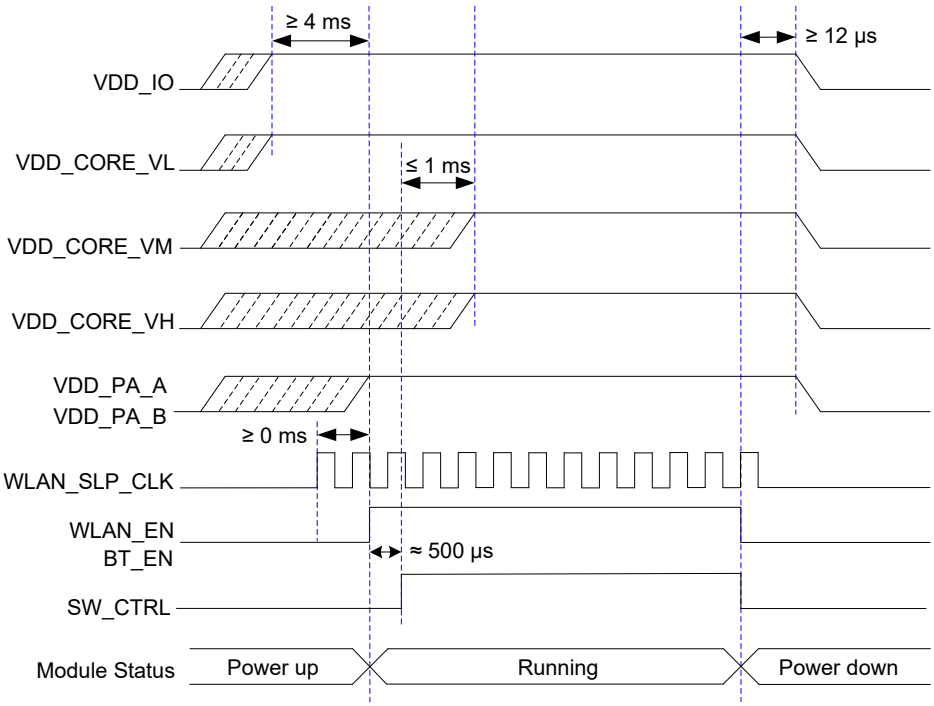

Figure 5: Timing of Power Up and Power Down

4 Application Interfaces

4.1. Wi-Fi Application Interfaces

The following figure shows the Wi-Fi application interface connection between the module and the host.

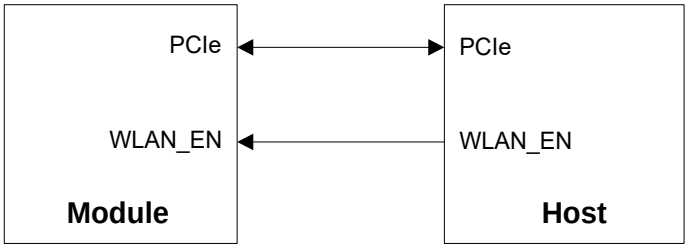

Figure 6: Wi-Fi Application Interface Connection

4.1.1. WLAN_EN

Wi-Fi function of the module is controlled by WLAN_EN. When WLAN_EN is at a high level, Wi-Fi function will be enabled.

Table 6: Pin Description of WLAN_EN

Pin Name	Pin No.	I/O	Description	Comment
WLAN_EN	68	DI	Wi-Fi function enable control	Reserve a 100 kΩ external weak pull-down resistor. Active high.

NOTE

WLAN_EN is the Wi-Fi function enable signal. When routing, keep it far away from power supply traces, crystal-oscillators, magnetic devices, sensitive signals and signals such as RF signals, analog signals, and noise signals generated by clock and DC-DC.

4.1.2. PCIe Interface

Table 7: Pin Definition of PCIe Interface

Pin Name	Pin No.	I/O	Description	Comment
PCIE_REFCLK_P	19	AI	PCIe reference clock (+)	Require differential impedance of 85 Ω.
PCIE_REFCLK_M	18	AI	PCIe reference clock (-)	
PCIE_TX_P	15	AO	PCIe transmit (+)	
PCIE_TX_M	16	AO	PCIe transmit (-)	
PCIE_RX_P	12	AI	PCIe receive (+)	
PCIE_RX_M	13	AI	PCIe receive (-)	
PCIE_CLKREQ_N	9	DO	PCIe clock request	
PCIE_WAKE_N	8	DO	PCIe wakes up	
PCIE_RST_N	7	DI	PCIe reset	

The following figure shows the PCIe interface connection between the module and the host.

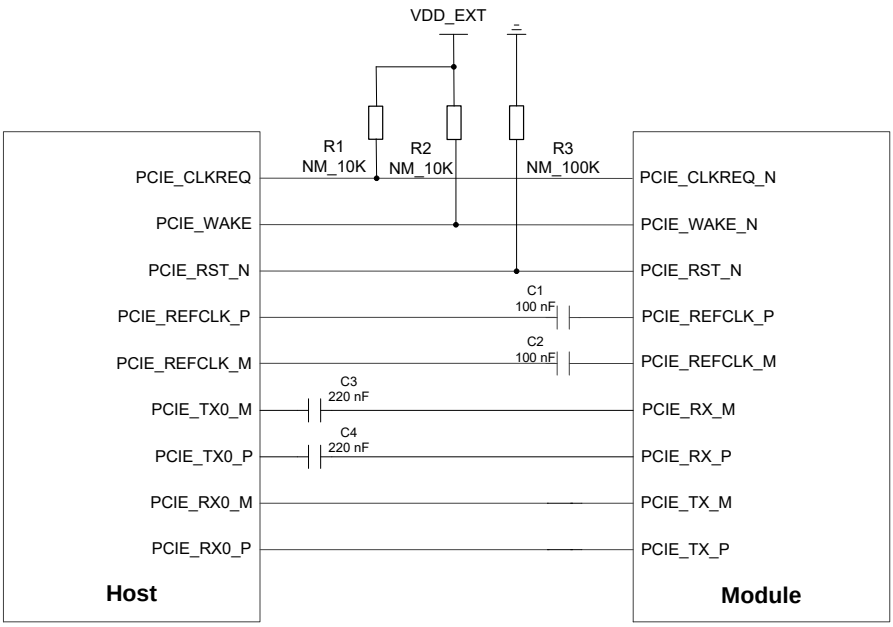

Figure 7: PCIe Interface Connection

To ensure the signal integrity of PCIe interface, C3 and C4 should be placed close to the host. The extra stubs of traces must be as short as possible. A couple of 100 nF capacitors (C1 and C2) must be added when the host is i.MX serial, because the differential clock of i.MX serial does not meet PCIe compliance standard.

The following principles of PCIe interface design should be complied with to meet PCIe Gen 3 specifications.

- It is important to route the PCIe signal traces as differential pairs with the differential impedance of 85 Ω ±10 %.
- For PCIe signal traces, the maximum length of each differential data pair (PCIE_TX/PCIE_RX/PCIE_REFCLK) is recommended to be less than 300 mm, and each differential data pair matching should be less than 0.7 mm (5 ps).
- Spacing between Tx differential data pair and Rx differential data pair should be three times of trace width.
- Spacing to all other signals (inter-interface) is four times of trace width.
- Do not route signal traces under crystals, oscillators, magnetic devices, or RF signal traces. It is important to route the PCIe differential traces in inner-layer of the PCB and surround the traces with ground on that layer and with ground planes above and below.

4.2. Bluetooth Application Interfaces

The following figure shows the Bluetooth application interface connection between TAF68E and the host.

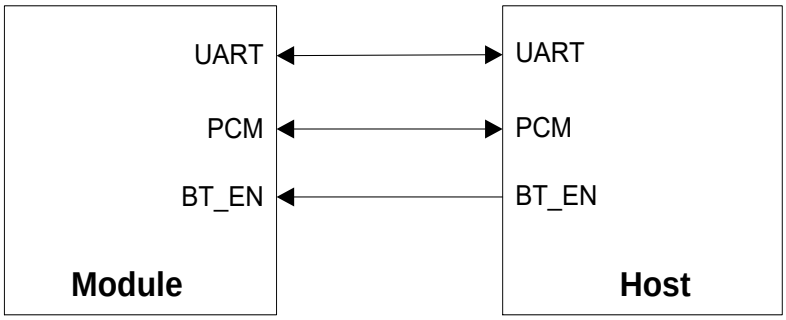

Figure 8: Bluetooth Application Interface Connection

4.2.1. BT_EN

Bluetooth function of the module is controlled by BT_EN. When BT_EN is at a high level, Bluetooth function will be enabled.

Table 8: Pins Description of BT_EN

Pin Name	Pin No.	I/O	Description	Comment
BT_EN	69	DI	Bluetooth enable control	Reserve a 100 kΩ external weak pull-down resistor. Active high

4.2.2. Bluetooth UART

The module supports an HCI UART as defined in *Bluetooth Core Specification Version 4.0*. The UART supports hardware flow control, and it can be used for data transmission with up to 3.2 Mbps baud rates.

Table 9: Pin Description of Bluetooth UART

Pin Name	Pin No.	I/O	Description
BT_TXD	74	DO	Bluetooth UART transmit
BT_RXD	75	DI	Bluetooth UART receive
BT_RTS	72	DO	Request to send signal from the module
BT_CTS	73	DI	Clear to send signal to the module

The following figure shows a reference design for Bluetooth UART connection between the module and the host.

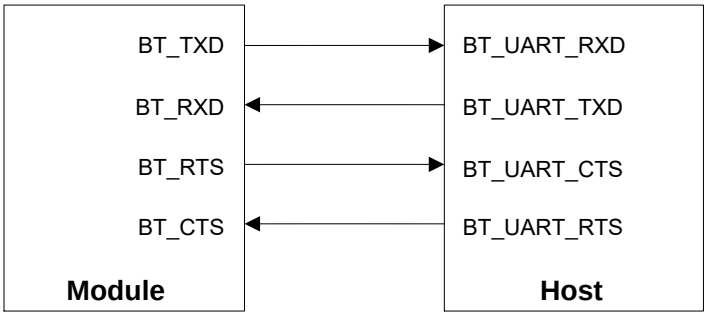

Figure 9: Bluetooth UART Connection

NOTE

When paired with TAG5xx series modules, it may be their own CTS connected to CTS and RTS connected to RTS. This depends on the input and output directions, so in principle, when connected, the input corresponds to the output.

4.2.3. PCM Interface

The module provides PCM interface for Bluetooth audio application.

Table 10: Pin Description of PCM Interface

Pin Name	Pin No.	I/O	Description
PCM_DIN	2	DI	PCM data input
PCM_SYNC	5	DI	PCM data frame sync
PCM_CLK	4	DI	PCM clock
PCM_DOUT	3	DO	PCM data output

The following figure shows a reference design for PCM interface connection between the module and the host.

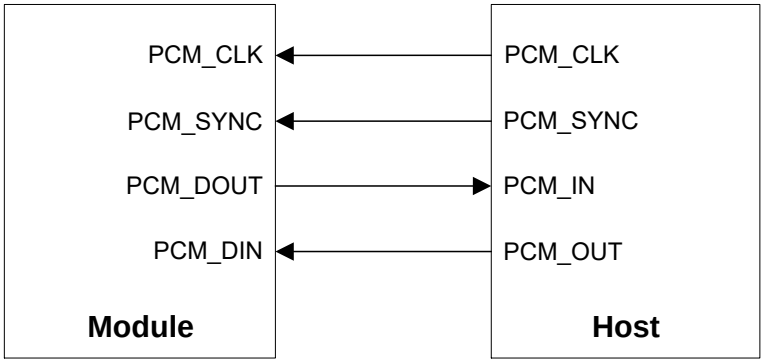

Figure 10: PCM Interface Connection

4.3. Other Interfaces

4.3.1. Coexistence Interface

Table 11: Pin Description of Coexistence Interface

Pin Name	Pin No.	I/O	Description	Comment
COEX_TXD	76	DO	LTE & Wi-Fi/Bluetooth coexistence transmit	If unused, keep them open.

COEX_RXD	1	DI	LTE & Wi-Fi/Bluetooth coexistence receive

The following figure shows the coexistence interface connection between the module and the host.

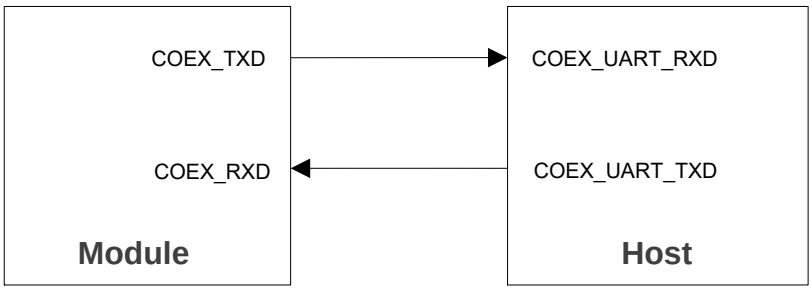

Figure 11: Coexistence Interface Connection

4.3.2. WLAN_SLP_CLK

The 32.768 kHz sleep clock is used in low power consumption modes, such as power saving mode and sleep mode. It serves as a timer to determine when to wake up the module to receive signals in various power saving schemes, and to maintain basic logic operations when the module is in sleep mode. The module is unable to boot up and work without the sleep clock.

Table 12: Pin Description of WLAN_SLP_CLK

Pin Name	Pin No.	I/O	Description	Comment
WLAN_SLP_CLK	22	DI	Wi-Fi sleep clock	The module is unable to boot up and work without sleep clock.

The following are the recommended selection parameters for the recommended 32.768 kHz crystal:

Table 13: Parameter Recommendation

Parameter	Recommended Value	Unit
Frequency	32.768	kHz
Frequency accuracy	±200	ppm
Duty cycle	30–70 %	-
Peak-to-peak voltage	1.8	V

Signal type	Square wave	-
Clock Logic High	5–25	μs

4.3.3. SW_CTRL

Table 14: Pin Definition of SW_CTRL

Pin Name	Pin No.	I/O	Description	Comment
SW_CTRL	10	DO	Switch control	Control PMIC output. If unused, keep it open.

The following figure shows the SW_CTRL connection between the module and the host. The SW_CTRL only can be used with AG5xx series modules.

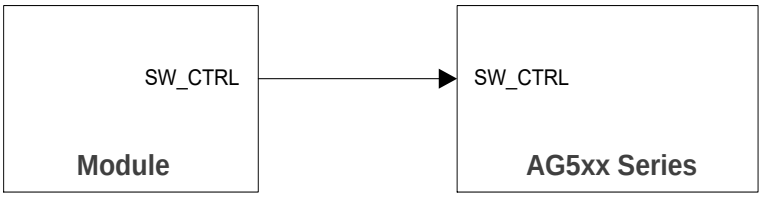

Figure 12: SW_CTRL Connection

5 RF Specifications

Appropriate antenna type and design should be used with matched antenna parameters according to specific application. It is required to perform a comprehensive functional test for the RF design before mass production of terminal products. The entire content of this chapter is provided for illustration only. Analysis, evaluation and determination are still necessary when designing target products.

5.1. RF Antenna

5.1.1. Antenna Interfaces & Frequency Bands

Table 15: Pin Definition of RF Antenna Interfaces

Pin Name	Pin No.	I/O	Description	Comment
ANT_WIFI0/BT	45	AIO	Wi-Fi 0/Bluetooth antenna interface	50 Ω characteristic impedance.
ANT_WIFI1	54	AIO	Wi-Fi 1 antenna interface	
ANT_BT	37	AIO	Reserved dedicated Bluetooth antenna interface	

Table 16: Operating Frequencies (Unit: GHz)

Parameter	Frequency
2.4 GHz Wi-Fi	2.400–2.4835
5 GHz Wi-Fi	5.150–5.850
6 GHz Wi-Fi	5.925–7.125
Bluetooth	2.400–2.4835

5.1.2. Reference Design

The module provides three RF antenna pins for Wi-Fi and Bluetooth antenna connection. For Bluetooth antenna, it supports Wi-Fi and Bluetooth shared antenna interface (ANT_WIFI0/BT) and dedicated Bluetooth antenna interface (ANT_BT) which is optional.

A reference circuit design for the RF antenna interfaces (ANT_WIFI1 is taken as an example) is shown below. It is recommended to reserve a π-type matching circuit for better RF performance. Place the matching components (C1, C2, R1, D1) to antennas as close as possible. Capacitors (C1 and C2) are not mounted by default, and R1 is only mounted with 0 Ω resistor. ESD protection component D1 should be added on all antenna interfaces, and the parasitic capacitance should be less than 0.05 pF.

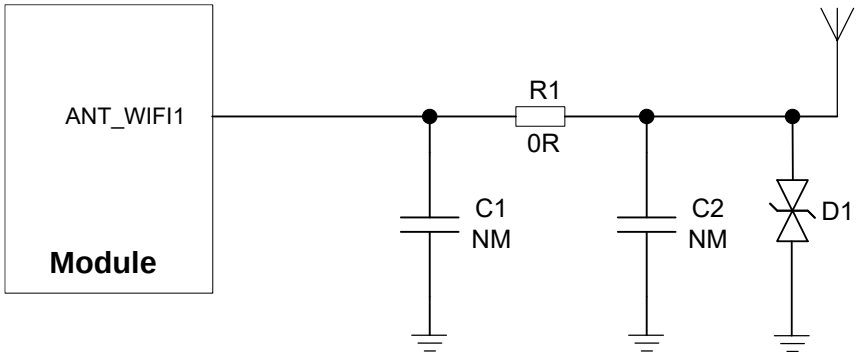

Figure 13: Reference Design for RF Antenna Interfaces

Another type of reference circuit for the RF antenna interfaces is shown below, which is designed for vehicle applications. It is recommended to reserve two notch filter circuits and a π-type matching circuit for better RF performance. C2, L1, L2 and C3 comprise two notch filter circuits for filtering out interference caused by a particular frequency. When L1, L2, C2 and C3 are not mounted, C1, R1 and C4 comprise a π-type matching circuit. Capacitors C1–C4 and inductors L1 and L2 are not mounted by default, and R1 is 0 Ω by default. ESD protection component D1 should be added on all antenna interfaces, and the parasitic capacitance should be less than 0.05 pF

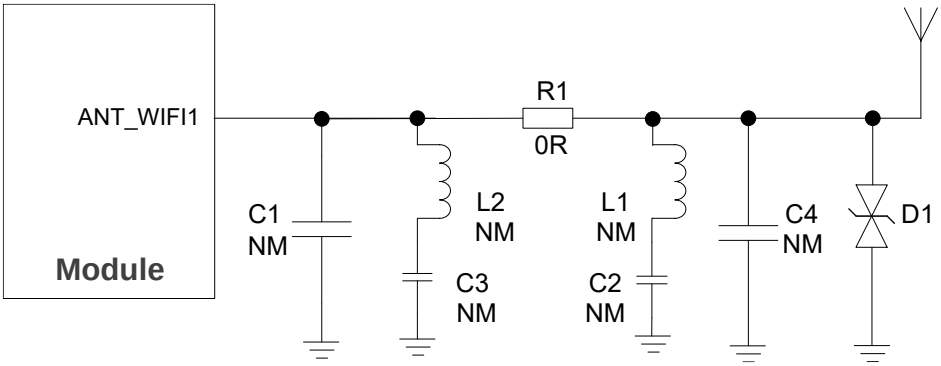

Figure 14: Reference Circuit for RF Antenna Interfaces (Vehicle Applications)

5.2. RF Performances

5.2.1. Conducted RF Performance of Wi-Fi

5.2.1.1. Transmitting Power

Table 17: Conducted RF Output Power at 2.4 GHz (Unit: dBm)

Standard	Data Rate	Typ.
802.11b	1 Mbps	16.5
802.11b	11 Mbps	16.5
802.11g	6 Mbps	16.0
802.11g	54 Mbps	13.5
802.11n, HT20	MCS 0	15.5
802.11n, HT20	MCS 7	12.5
802.11n, HT40	MCS 0	15.0
802.11n, HT40	MCS 7	12.0
802.11ax, HE20	MCS 0	15.5
802.11ax, HE20	MCS 11	11.0
802.11ax, HE40	MCS 0	15.0
802.11ax, HE40	MCS 11	9.5

Table 18: Conducted RF Output Power at 5 GHz (Unit: dBm)

Standard	Data Rate	Typ.
802.11a	6 Mbps	15.5
802.11a	54 Mbps	13.5
802.11n, HT20	MCS 0	15.5
802.11n, HT20	MCS 7	12.5

802.11n, HT40	MCS 0	15.0
802.11n, HT40	MCS 7	12.0
802.11ac, VHT20	MCS 0	15.5
802.11ac, VHT20	MCS 8	12.5
802.11ac, VHT40	MCS 0	15.0
802.11ac, VHT40	MCS 9	12.0
802.11ac, VHT80	MCS 0	14.5
802.11ac, VHT80	MCS 9	11.5
802.11ac, VHT160	MCS 0	14.0
802.11ac, VHT160	MCS 9	11.0
802.11ax, HE20	MCS 0	15.5
802.11ax, HE20	MCS 11	11.5
802.11ax, HE40	MCS 0	15.0
802.11ax, HE40	MCS 11	11.0
802.11ax, HE80	MCS 0	14.5
802.11ax, HE80	MCS 11	10.5
802.11ax, HE160	MCS 0	14.0
802.11ax, HE160	MCS 11	9.5

Table 19: Conducted RF Output Power at 6 GHz (Unit: dBm)

Standard	Data Rate	Typ.
802.11ax, HE20	MCS 0	14.5
802.11ax, HE20	MCS 11	10.5
802.11ax, HE40	MCS 0	14.0
802.11ax, HE40	MCS 11	10.0

802.11ax, HE80	MCS 0	13.5
802.11ax, HE80	MCS11	9.5
802.11ax, HE160	MCS0	13.0
802.11ax, HE160	MCS11	8.5

5.2.1.2. Receiver Sensitivity

Table 20: Conducted RF Receiver Sensitivity at 2.4 GHz (Unit: dBm)

Standard	Data Rate	Typ.
802.11b	1 Mbps	-96.0
802.11b	11 Mbps	-87.5
802.11g	6 Mbps	-92.5
802.11g	54 Mbps	-74.0
802.11n, HT20	MCS 0	-92.0
802.11n, HT20	MCS 7	-72.0
802.11n, HT40	MCS 0	-89.0
802.11n, HT40	MCS 7	-69.0
802.11ax, HE20	MCS 0	-93.0
802.11ax, HE20	MCS 11	-62.0
802.11ax, HE40	MCS 0	-90.0
802.11ax, HE40	MCS 11	-59.0

Table 21: Conducted RF Receiver Sensitivity at 5 GHz (Unit: dBm)

Standard	Data Rate	Typ.
802.11a	6 Mbps	-93.0
802.11a	54 Mbps	-74.5

802.11n, HT20	MCS 0	-92.0
802.11n, HT20	MCS 7	-72.5
802.11n, HT40	MCS 0	-89.0
802.11n, HT40	MCS 7	-70.0
802.11ac, VHT20	MCS 0	-92.0
802.11ac, VHT20	MCS 8	-68.0
802.11ac, VHT40	MCS 0	-89.0
802.11ac, VHT40	MCS 9	-65.0
802.11ac, VHT80	MCS 0	-85.0
802.11ac, VHT80	MCS 9	-60.0
802.11ac, VHT160	MCS 0	-83.0
802.11ac, VHT160	MCS 9	-56.5
802.11ax, HE20	MCS 0	-93.0
802.11ax, HE20	MCS 11	-62.5
802.11ax, HE40	MCS 0	-90.5
802.11ax, HE40	MCS 11	-59.5
802.11ax, HE80	MCS 0	-87.0
802.11ax, HE80	MCS 11	-57.5
802.11ax, HE160	MCS 0	-84.0
802.11ax, HE160	MCS 11	-55.0

Table 22: Conducted RF Receiver Sensitivity at 6 GHz (Unit: dBm)

Standard	Data Rate	Typ.
802.11ax, HE20	MCS 0	-92.0
802.11ax, HE20	MCS 11	-62.5

802.11ax, HE40	MCS 0	-89.0
802.11ax, HE40	MCS 11	-59.5
802.11ax, HE80	MCS 0	-86.0
802.11ax, HE80	MCS 11	-57.5
802.11ax, HE160	MCS 0	-83.5
802.11ax, HE160	MCS 11	-54.0

5.2.2. Bluetooth Performances

Table 23: Conducted RF Performances (Unit: dBm)

Description	Transmitting Power (Typ.)	Receiver Sensitivity (Typ.)
GFSK	8.0	-94.0
π/4-DQPSK	4.0	-94.0
8-DQPSK	4.0	-87.0
BLE (1 Mbps)	8.0	-97.0
BLE (2 Mbps)	8.0	-95.0

5.3. RF Routing Guidelines

For user's PCB, the characteristic impedance of all RF traces should be controlled to 50 Ω. The impedance of the RF traces is usually determined by the trace width (W), the materials' dielectric constant, the height from the reference ground to the signal layer (H), and the spacing between RF traces and grounds (S). Microstrip or coplanar waveguide is typically used in RF layout to control characteristic impedance. The following are reference designs of microstrip or coplanar waveguide with different PCB structures.

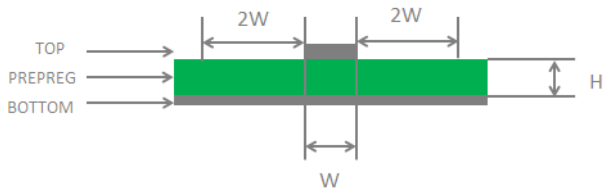

Figure 15: Microstrip Design on a 2-layer PCB

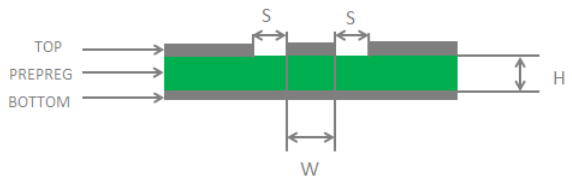

Figure 16: Coplanar Waveguide Design on a 2-layer PCB

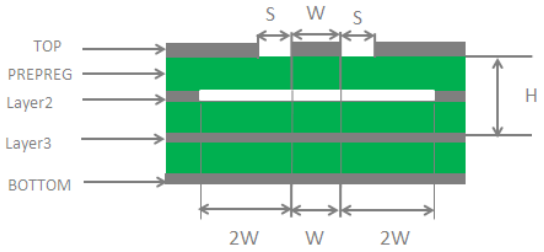

Figure 17: Coplanar Waveguide Design on a 4-layer PCB (Layer 3 as Reference Ground)

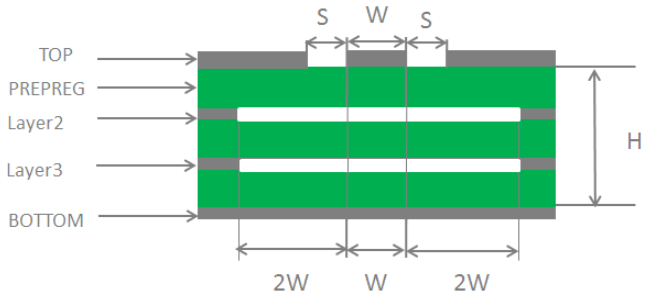

Figure 18: Coplanar Waveguide Design on a 4-layer PCB (Layer 4 as Reference Ground)

In order to ensure RF performance and reliability, follow the principles below in RF layout design:

- Use an impedance simulation tool to accurately control the characteristic impedance of RF traces to 50 Ω.
- The GND pins adjacent to RF pins should not be designed as thermal relief pads, and should be fully connected to ground.
- The distance between the RF pins and the RF connector should be as short as possible and all the right-angle traces should be changed to curved ones. The recommended trace angle is 135°.
- There should be clearance under the signal pin of the antenna connector or solder joint.
- The reference ground of RF traces should be complete. Meanwhile, adding some ground vias around RF traces and the reference ground could help to improve RF performance. The distance between the ground vias and RF traces should be not less than twice the width of RF signal traces (2 × W).
- Keep RF traces away from interference sources, and avoid intersection and paralleling between traces on adjacent layers.

For more details about RF layout, please refer to ***document 0***.

5.4. Antenna Design Requirements

Table 24: Antenna Design Requirements

Parameter	Requirement
Frequency ranges (GHz)	● 2.4 GHz: 2.400–2.4835 ● 5 GHz: 5.150–5.850 ● 6 GHz: 5.925–7.125
Cable Insertion Loss (dB)	< 1
VSWR	≤ 2 (Typ.)
Gain (dBi)	1 (Typ.)
Max Input Power (W)	50
Input Impedance (Ω)	50
Polarization Type	Vertical

5.5. RF Connector Recommendation

If RF connector is used for antenna connection, it is recommended to use the HFM connector provided by Rosenberger.

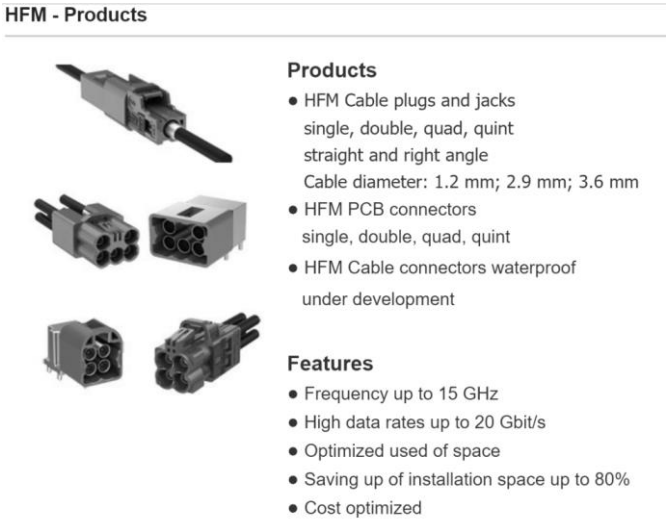

Figure 19: Description of the HFM Connector

For more details, visit https://www.rosenbergerap.com.

6 Electrical Characteristics & Reliability

6.1. Absolute Maximum Ratings

Table 25: Power Supply Ratings (Unit: V)

Parameter	Min.	Max.
VDD_CORE_VL	-0.3	2.1
VDD_CORE_VM	-0.3	2.1
VDD_CORE_VH	-0.3	2.1
VDD_IO	-0.3	VDD_IO + 0.2
VDD_PA_A	-0.3	TBD
VDD_PA_B	-0.3	VDD_PA_B + 0.4
Digital I/O Input Voltage	-0.3	VDD_IO + 0.2

6.2. Power Supply Ratings

Table 26: Module Power Supply Ratings (Unit: V)

Parameter	Min.	Typ.	Max.
VDD_CORE_VL	0.9	0.95	1.2
VDD_CORE_VM	1.30	1.35	1.42
VDD_CORE_VH	1.85	1.9	2.0

VDD_IO	1.71	1.8	1.89
VDD_PA_A	3.3	3.85	5.0
VDD_PA_B	1.71	1.8	2.1

6.3. Power Consumption

6.3.1. Wi-Fi Power Consumption

Table 27: Wi-Fi Tx Power Consumption in Non-signaling Mode (Unit: mA)

Condition		$I_{VDD_CORE_VL}$ (0.95 V)	$I_{VDD_CORE_VM}$ (1.35 V)	$I_{VDD_CORE_VH}$ (1.9 V)	I_{VDD_IO} (1.8 V)	$I_{VDD_PA_A}$ (3.85 V)	$I_{VDD_PA_B}$ (1.8 V)
1 × 1	2.4 GHz 802.11b 1Mbps @ TBD dBm	TBD	TBD	TBD	TBD	TBD	TBD
	5 GHz 802.11ax HE20 MCS 0 @ TBD dBm	TBD	TBD	TBD	TBD	TBD	TBD
	6 GHz 802.11ax HE 20 MCS 0 @ TBD dBm	TBD	TBD	TBD	TBD	TBD	TBD
2 × 2	2.4 GHz 802.11ax HE20 MCS 0 @ TBD dBm	TBD	TBD	TBD	TBD	TBD	TBD
	5 GHz 802.11ax HE20 MCS 0 @ TBD dBm	TBD	TBD	TBD	TBD	TBD	TBD
	6 GHz 802.11ax HE20 MCS 0 @ TBD dBm	TBD	TBD	TBD	TBD	TBD	TBD
2 × 2 + 2 × 2	2.4 GHz 802.11ax HE20 MCS 0 @ TBD dBm + 5 GHz 802.11ax HE20 MCS0 @ TBD dBm	TBD	TBD	TBD	TBD	TBD	TBD
	2.4 GHz 802.11ax HE20 MCS 0 @ TBD dBm + 6 GHz 802.11ax HE20 MCS0 @ TBD dBm	TBD	TBD	TBD	TBD	TBD	TBD

6.3.2. Bluetooth Power Consumption

Table 28: Bluetooth Tx Power Consumption in Non-signalling Mode (Unit: mA)

Description	Power	$I_{VDD_CORE_VL}$ (0.95 V)	$I_{VDD_CORE_VM}$ (1.35 V)	$I_{VDD_CORE_VH}$ (1.9 V)	I_{VDD_IO} (1.8 V)
GFSK	TBD	TBD	TBD	TBD	TBD
π/4-DQPSK	TBD	TBD	TBD	TBD	TBD
8-DQPSK	TBD	TBD	TBD	TBD	TBD
BLE (1 Mbps)	TBD	TBD	TBD	TBD	TBD
BLE (2 Mbps)	TBD	TBD	TBD	TBD	TBD

NOTE

For details about the current consumption, please contact Technical Support for the power consumption test report of the module.

6.4. Digital I/O Characteristics

Table 29: VDD_IO I/O Requirements

Parameter	Description	Min.	Max.	Unit
V_{IH}	High-level input voltage	0.7 × VDD_IO	VDD_IO + 0.2	V
V_{IL}	Low-level input voltage	0.3	0.3 × VDD_IO	V
V_{OH}	High-level output voltage	VDD_IO - 0.45	VDD_IO	V
V_{OL}	Low-level output voltage	0	0.45	V
I_{iH}	High-level input leakage current	-	1	μA
I_{iL}	Low-level input leakage current	-1	-	μA

6.5. ESD Protection

Static electricity occurs naturally and it may damage the module. Therefore, applying proper ESD countermeasures and handling methods is imperative. For example, wear anti-static gloves during the development, production, assembly and testing of the module; add ESD protection components to the ESD sensitive interfaces and points in the product design.

Table 30: ESD Characteristics (Temperature: 25–30 °C, Humidity: 40 ±5 %; Unit: kV)

Tested Interfaces	Contact Discharge	Air Discharge
VDD_CORE_VL	TBD	TBD
VDD_CORE_VM	TBD	TBD
VDD_CORE_VH	TBD	TBD
VDD_PA_A	TBD	TBD
VDD_PA_B	TBD	TBD
VDD_IO	TBD	TBD
GND	TBD	TBD
All antenna interfaces	TBD	TBD

6.6. Operating and Storage Temperatures

Table 31: Operating and Storage Temperatures (Unit: °C)

Parameter	Min.	Typ.	Max.
Operating Temperature [2]	-40	+25	+85
Storage Temperature	-40	-	+90

[2] Within operation temperature range, the module's related performance meets IEEE and Bluetooth specifications.

6.7. Thermal Dissipation

The module exhibits the best performance when all internal chips are working within their designated operating temperature ranges. However, if any chip reaches or exceeds its maximum temperature, the module may still work but its performance and functionalities (such as RF output power and data rate) will be compromised. Therefore, the thermal design should be maximally optimized to ensure that all internal chips consistently remain within their recommended operating temperature ranges.

The following principles for thermal consideration are provided for reference:

- Keep the module away from heat sources on the PCB motherboard, especially high-power components such as processor, power amplifier, and power supply.
- Maintain the integrity of the PCB copper layer and drill as many thermal vias as possible.
- Expose the copper on the backside of the PCB where the module is mounted.
- Follow the principles below when designing the heatsink:
  - It is recommended to integrate the heatsink with the outer shell of telematic control unit (TCU) according to the module's application scenario. This allows for rapid transfer of the heat generated by the module to the outer shell, thus enhancing heat dissipation efficiency and eliminating the need for fixing the heatsink.
  - The entire shell of the TCU or the shell of the area where the module is located must be made of materials with excellent heat dissipation properties. It is recommended to use die-cast aluminum with higher thermal conductivity.
  - Based on the heat dissipation direction of the module, you can choose either of the following optional heatsink installation positions:
    a) The top surface of the module shielding cover;
    b) The bottom surface of the PCBA under the module;
    c) Both the top surface of the module shielding cover and the bottom surface of the PCBA under the module.

If the heatsink is located only on one side, option a) is recommended; if the situation allows, option c) is recommended.

  - The heatsink must meet the following requirements:
    a) The base plate area of the heatsink should be larger than the module area for full coverage;
    b) Choose a heatsink with adequate fins to ensure effective heat dissipation. The fins should be located within the area where the module is mounted.
  - Since the heatsink is in contact with either the top surface of the shielding cover or the bottom surface of the PCBA through the thermal interface material (TIM), it is necessary to choose a TIM with high thermal conductivity, good flexibility, and good wettability.
  - Fasten the shell (heatsink) with screws around the TCU to prevent the heatsink from falling off during the drop tests, shock and vibration tests, or transportation.
- Implement other auxiliary cooling methods, such as air cooling or liquid cooling.

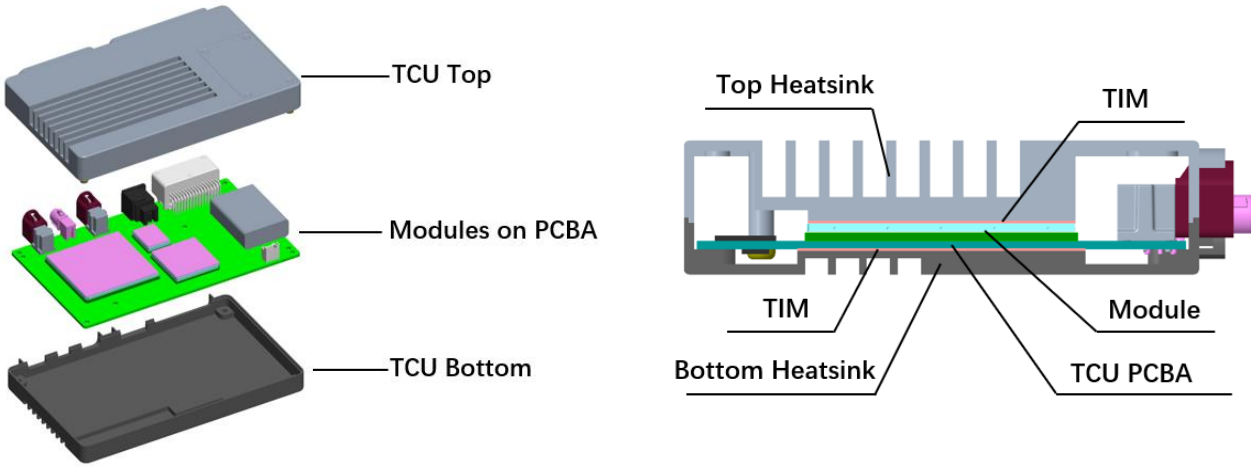

Figure 20: Heatsink Design Example

7 Mechanical Information

This chapter describes the mechanical dimensions of the module. All dimensions are measured in millimeter (mm), and the dimensional tolerances are ±0.2 mm unless otherwise specified.

7.1. Mechanical Dimensions

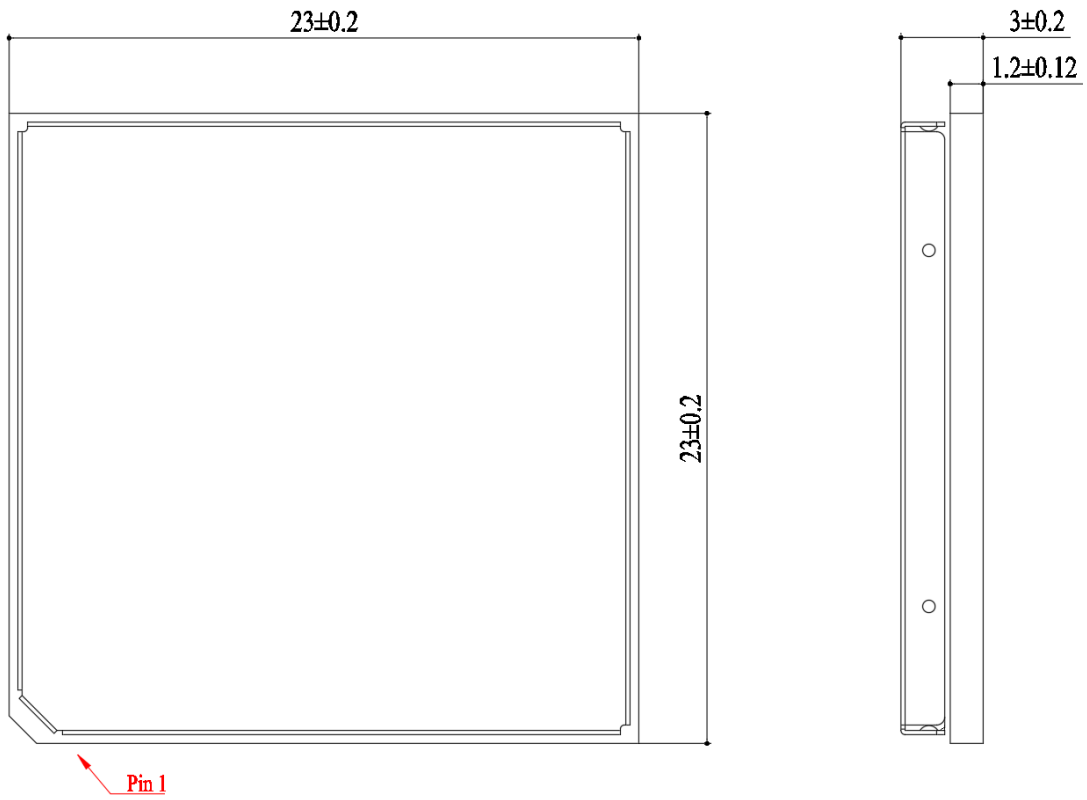

Figure 21: Top and Side Dimensions

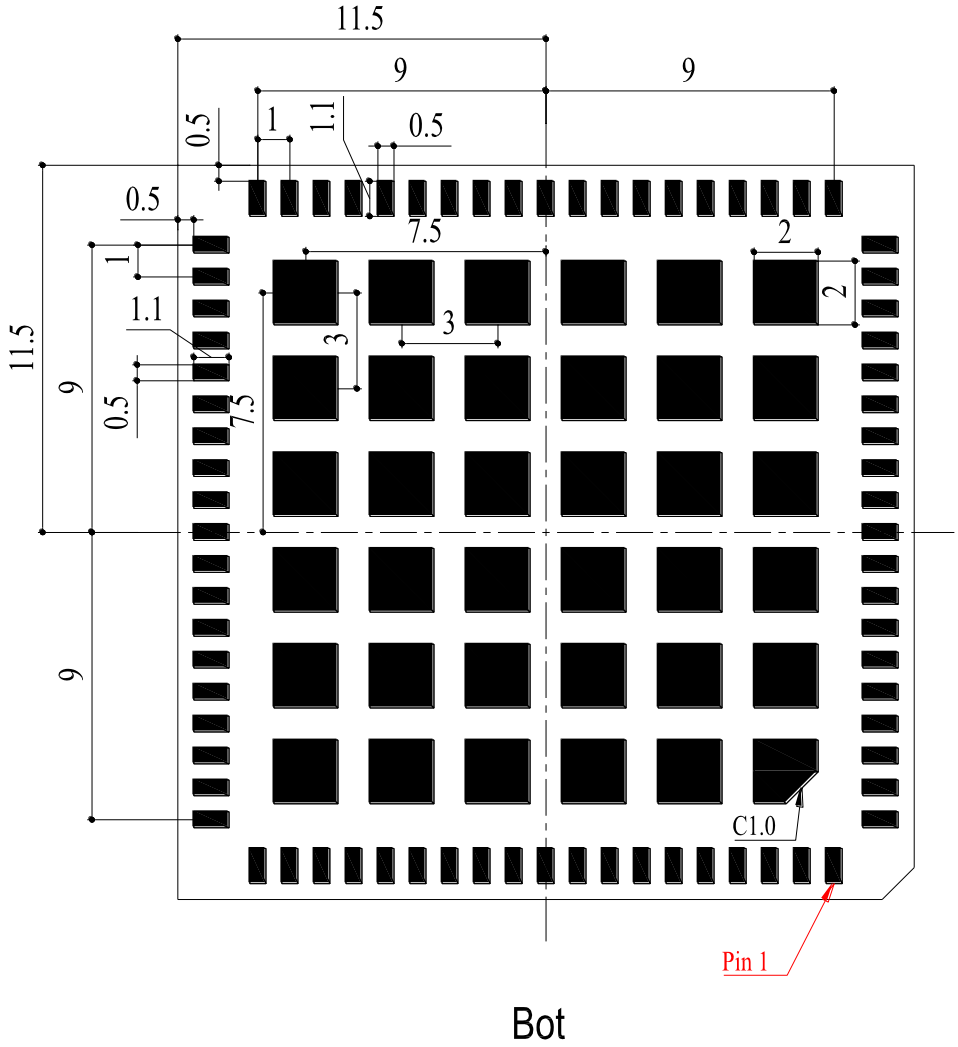

Figure 22: Bottom Dimensions (Bottom View)

NOTE

The package warpage level of the module refers to the *JEITA ED-7306* standard.

7.2. Recommended Footprint

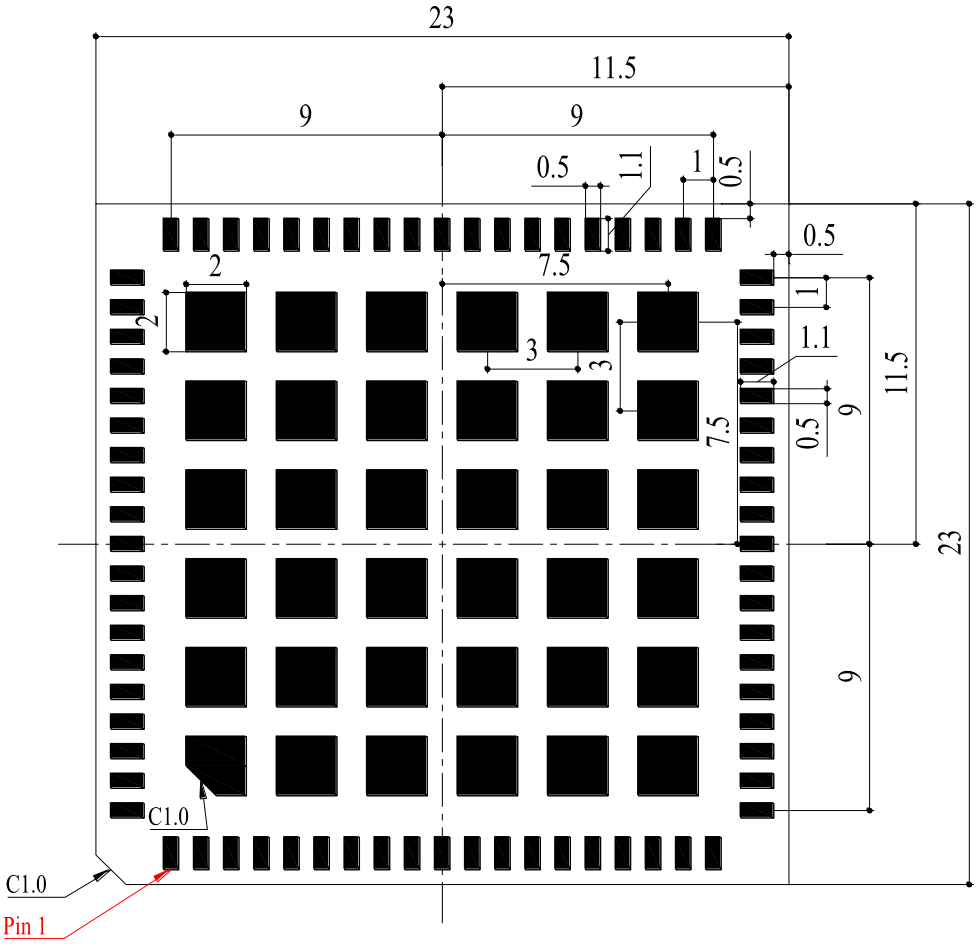

Figure 23: Recommended Footprint

NOTE

Keep at least 3 mm between the module and other components on the motherboard to improve soldering quality and maintenance convenience.

7.3. Top and Bottom Views

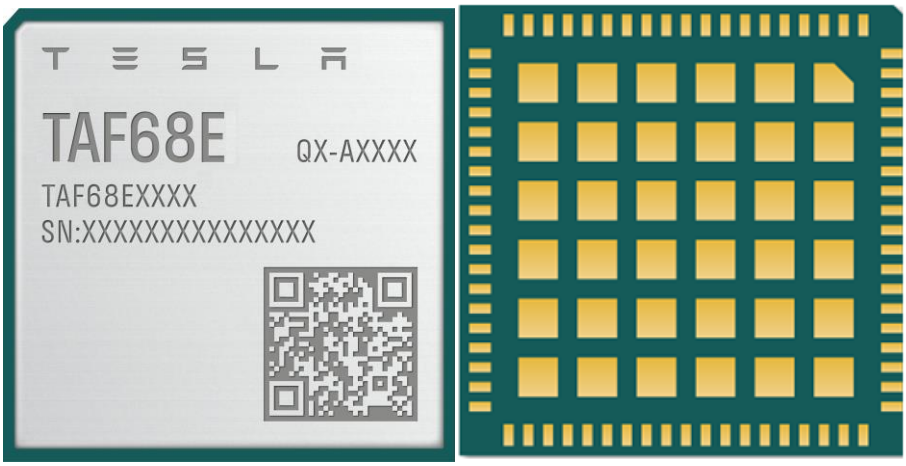

Figure 24: Top and Bottom Views

NOTE

Images above are for illustration purpose only and may differ from the actual module.

8 Storage, Manufacturing & Packaging

8.1. Storage Conditions

The module is provided with vacuum-sealed packaging. MSL of the module is rated as 3. The storage requirements are shown below.

1. Recommended storage condition: the temperature should be 23 ±5 °C and the relative humidity should be 35–60 %.

2. Shelf life (in a vacuum-sealed packaging): 12 months in recommended storage condition.

3. Floor life: 168 hours [3] in a factory where the temperature is 23 ±5 °C and relative humidity is below 60 %. After the vacuum-sealed packaging is removed, the module must be processed in reflow soldering or other high-temperature operations within 168 hours. Otherwise, the module should be stored in an environment where the relative humidity is less than 10 % (e.g., a dry cabinet).

4. The module should be pre-baked to avoid blistering, cracks and inner-layer separation in PCB under the following circumstances:

   - The module is not stored in Recommended Storage Condition;
   - Violation of the third requirement mentioned above;
   - Vacuum-sealed packaging is broken, or the packaging has been removed for over 24 hours.

5. If needed, the pre-baking should follow the requirements below:
   - The module should be baked for 8 hours at 120 ±5 °C;
   - The module must be soldered to PCB within 24 hours after the baking, otherwise it should be put in a dry environment such as in a dry cabinet.

[3] This floor life is only applicable when the environment conforms to *IPC/JEDEC J-STD-033*. It is recommended to start the solder reflow process within 24 hours after the package is removed if the temperature and moisture do not conform to, or are not sure to conform to *IPC/JEDEC J-STD-033*. Do not unpack the modules in large quantities until they are ready for soldering.

NOTE

1. To avoid blistering, layer separation and other soldering issues, extended exposure of the module to the air is forbidden.
2. Take out the module from the package and put it on high-temperature-resistant fixtures before baking. If shorter baking time is desired, see *IPC/JEDEC J-STD-033* for the baking procedure.
3. Pay attention to ESD protection, such as wearing anti-static gloves, when touching the modules.

8.2. Manufacturing and Soldering

Push the squeegee to apply the solder paste on the surface of stencil, thus making the paste fill the stencil openings and then penetrate to the PCB. Apply proper force on the squeegee to produce a clean stencil surface on a single pass. To guarantee module soldering quality, the thickness of stencil for the module is recommended to be 0.13–0.15 mm. For more details, see ***document 0***.

The recommended peak reflow temperature should be 235–246 ºC, with 246 ºC as the absolute maximum reflow temperature. To avoid damage to the module caused by repeated heating, it is recommended that the module should be mounted only after reflow soldering for the other side of PCB has been completed. The recommended reflow soldering thermal profile (lead-free reflow soldering) and related parameters are shown below.

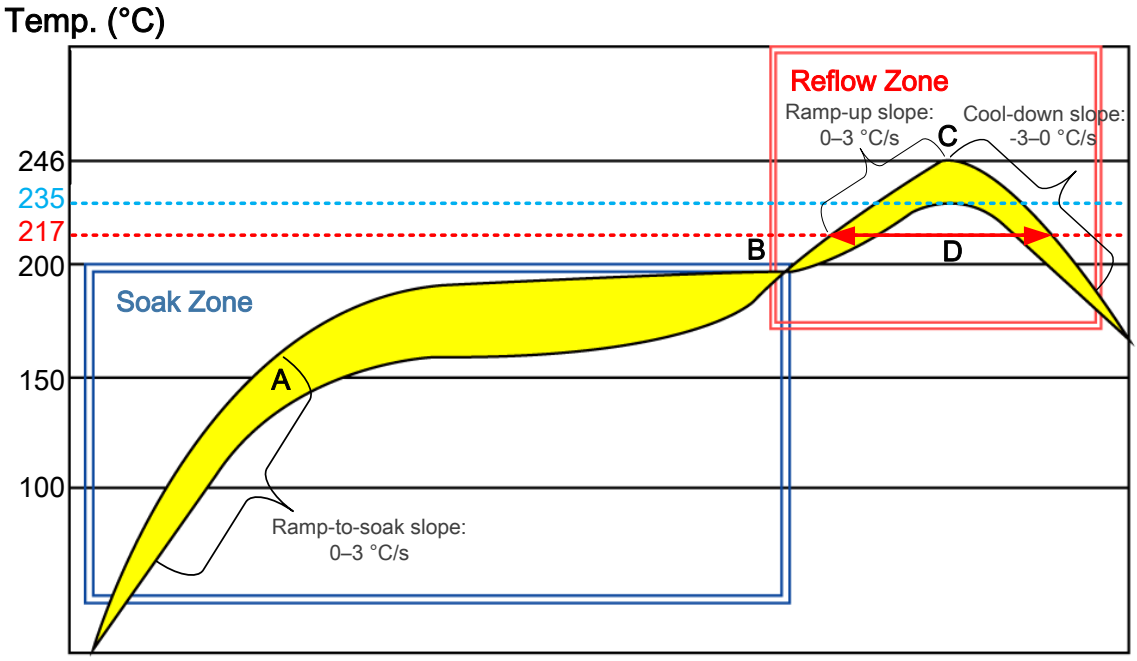

Figure 25: Recommended Reflow Soldering Thermal Profile

Table 32: Recommended Thermal Profile Parameters

Factor	Recommended Value
Soak Zone	
Ramp-to-soak Slope	0–3 °C/s
Soak Time (between A and B: 150 °C and 200 °C)	70–120 s
Reflow Zone	
Ramp-up Slope	0–3 °C/s
Reflow Time (D: over 217 °C)	40–70 s
Max. Temperature	235–246 °C
Cool-down Slope	-3–0 °C/s
Reflow Cycle	
Max. Reflow Cycle	1

NOTE

1. The above profile parameter requirements are for the measured temperature of the solder joints. Both the hottest and coldest spots of solder joints on the PCB should meet the above requirements.
2. During manufacturing and soldering, or any other processes that may contact the module directly, NEVER wipe the module's shielding can with organic solvents, such as acetone, ethyl alcohol, isopropyl alcohol, trichloroethylene. Otherwise, the shielding can may become rusted.
3. The shielding can for the module is made of Cupro-Nickel base material. It is tested that after 12 hours' Neutral Salt Spray test, the laser engraved label information on the shielding can is still clearly identifiable and the QR code is still readable, although white rust may be found.
4. If a conformal coating is necessary for the module, do NOT use any coating material that may chemically react with the PCB or shielding cover, and prevent the coating material from flowing into the module.
5. Avoid using ultrasonic technology for module cleaning since it can damage crystals inside the module.
6. Avoid using materials that contain mercury (Hg), such as adhesives, for module processing, even if the materials are RoHS compliant and their mercury content is below 1000 ppm (0.1 %).
7. Due to the complexity of the SMT process, please contact Technical Support in advance for any situation that you are not sure about, or any process (e.g. selective soldering, ultrasonic soldering) that is not mentioned in ***document 0***.

8.3. Packaging Specification

This chapter outlines the key packaging parameters and processes. All figures below are for reference purposes only, as the actual appearance and structure of packaging materials may vary in delivery.

The modules are packed in a tape and reel packaging as specified in the sub-chapters below.

8.3.1. Carrier Tape

Carrier tape dimensions are illustrated in the following figure and table:

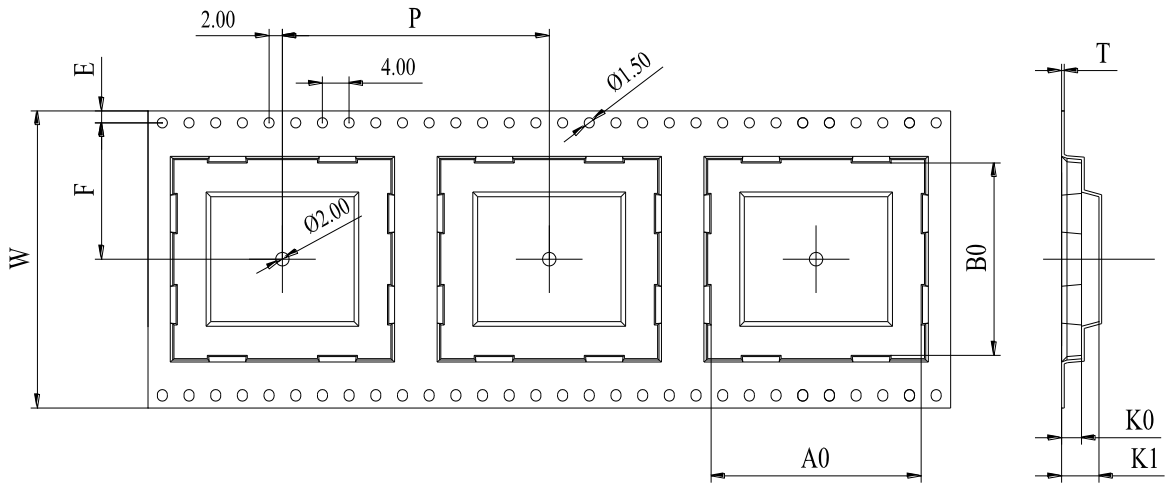

Figure 26: Carrier Tape Dimension Drawing (Unit: mm)

Table 33: Carrier Tape Dimension Table (Unit: mm)

W	P	T	A0	B0	K0	K1	F	E
44	32	0.4	23.5	23.5	3.5	6.8	20.2	1.75

8.3.2. Plastic Reel

Plastic reel dimensions are illustrated in the following figure and table:

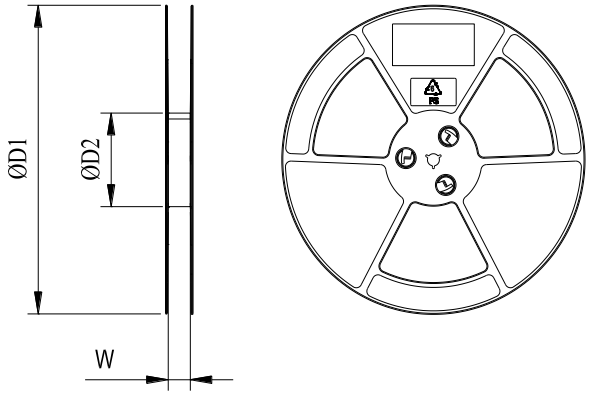

Figure 27: Plastic Reel Dimension Drawing

Table 34: Plastic Reel Dimension Table (Unit: mm)

øD1	øD2	W
330	100	44.5

8.3.3. Mounting Direction

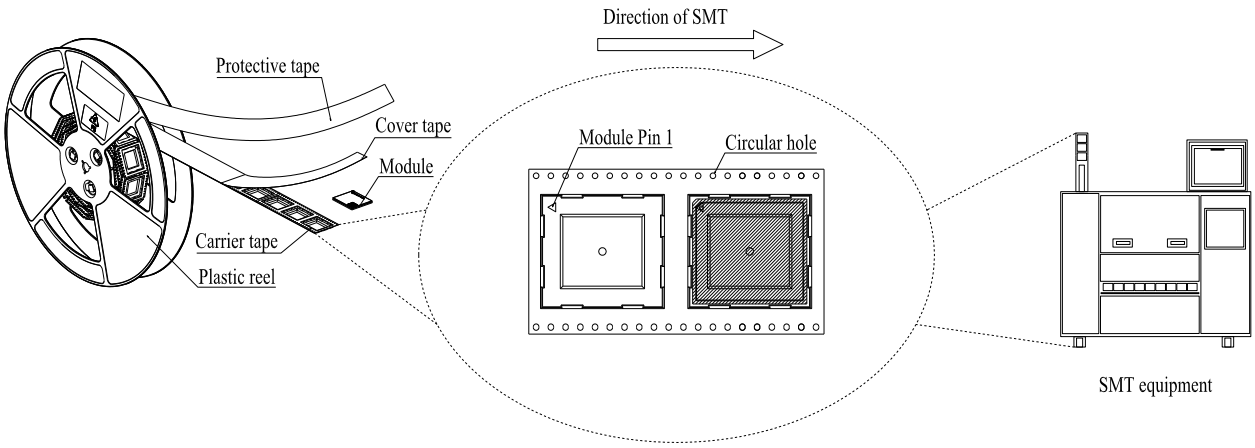

Figure 28: Mounting Direction

8.3.4. Packaging Process

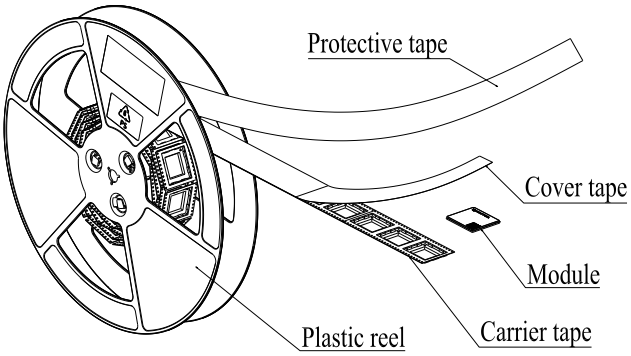

Place the modules onto the carrier tape cavity and cover them securely with cover tape. Wind the heat-sealed carrier tape onto a plastic reel and apply a protective tape for additional protection. 1 plastic reel can pack 250 modules.

Place the packaged plastic reel, humidity indicator card and desiccant bag into a vacuum bag, and vacuumize it.

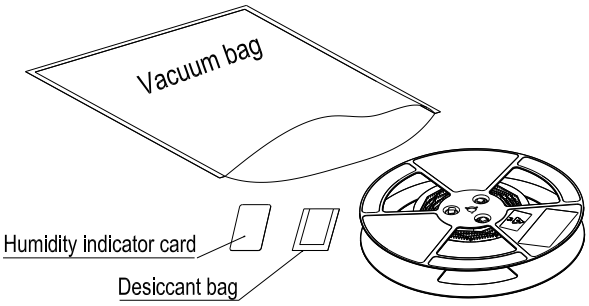

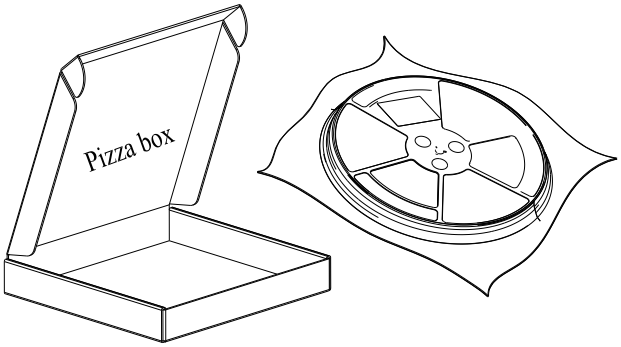

Place the vacuum-packed plastic reel into a pizza box.

Place the 4 packaged pizza boxes into 1 carton and seal it. 1 carton can pack 1000 modules.

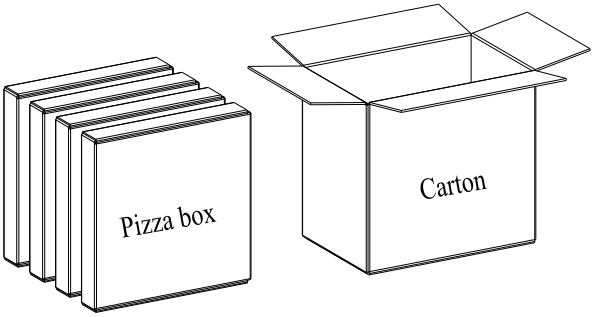

Figure 29: Packaging Process

9 Appendix References

Table 35: Terms and Abbreviations

Abbreviation	Description
AP	Application Processor
BLE	Bluetooth Low Energy
BPF	Band Pass Filter
bps	Bytes per second
CCK	Complementary Code Keying
CTS	Clear To Send
DPSK	Differential Phase Shift Keying
DQPSK	Differential Quadrature Phase Shift Keying
ESD	Electrostatic Discharge
EVB	Evaluation Board
FEM	Front-end Module
GFSK	Gauss frequency Shift Keying
GND	Ground
HE	High Efficiency
HT	High Throughput
IC	Integrated Circuit
IEEE	Institute of Electrical and Electronics Engineers
I/O	Input/Output

LGA	Land Grid Array
LTE	Long Term Evolution
Mbps	Megabits per second
MCS	Modulation and Coding Scheme
MSL	Moisture Sensitivity Levels
PCIe	Peripheral Component Interconnect Express
PCB	Printed Circuit Board
PCM	Pulse Code Modulation
PMIC	Power Management Integrated Circuit
QAM	Quadrature Amplitude Modulation
QPSK	Quadrature Phase Shift Keying
RF	Radio Frequency
RoHS	Restriction of Hazardous Substances
RTS	Request To Send
Rx	Receive
STA	Station
TCU	Telematic Control Unit
TBD	To Be Determined
TIM	Thermal Interface Material
TVS	Transient Voltage Suppressor
Tx	Transmit
UART	Universal Asynchronous Receiver/Transmitter
VHT	Very High Throughput
Vmax	Maximum Voltage
Vmin	Minimum Voltage

Vnom	Nominal Voltage
V_{IH}	High-level Input Voltage
V_{IL}	Low-level Input Voltage
V_{OH}	High-level Output Voltage
V_{OL}	Low-level Output Voltage
VSWR	Voltage Standing Wave Ratio
WLAN	Wireless Local Area Network

FCC Statement

Warning: Changes or modifications to this unit not expressly approved by the party responsible for compliance could void the user's authority to operate the equipment.

NOTE: This equipment has been tested and found to comply with the limits for a Class B digital device, pursuant to Part 15 of the FCC Rules. These limits are designed to provide reasonable protection against harmful interference in a residential installation. This equipment generates, uses and can radiate radio frequency energy and, if not installed and used in accordance with the instructions, may cause harmful interference to radio communications.

However, there is no guarantee that interference will not occur in a particular installation. If this equipment does cause harmful interference to radio or television reception, which can be determined by turning the equipment off and on, the user is encouraged to try to correct the interference by one or more of the following measures:

- Reorient or relocate the receiving antenna.
- Increase the separation between the equipment and receiver.
- Connect the equipment into an outlet on a circuit different from that to which the receiver is connected.
- Consult the dealer or an experienced radio/TV technician for help

The device must not be co-located or operating in conjunction with any other antenna or transmitter. This device complies with Part 15 of the FCC Rules. Operation is subject to the following two conditions : (1) this device may not cause harmful interference, and (2) this device must accept any interference received, including interference that may cause undesired operation.

FCC Radiation Exposure Statement
This equipment should be installed and operated with minimum distance 20cm between the radiator and your body.

Does not comply with the use restrictions of the product:
Portable devices used close with human's body (within 20cm), Like Cell phone, Notebook etc.

Integration instructions for host product manufacturers according to KDB 996369 D03 OEM Manual v01 and KDB 996369 D04 Module Integration Guide.

2.2 List of applicable FCC rules
FCC Part 15 Subpart C 15.247 & 15.209 &15.407.
2.3 Specific operational use conditions
The module can be used for mobile applications with a maximum 5.3 dBi antenna. The host manufacturer installing this module into their product must ensure that the final compos it product complies with the FCC requirements by a technical assessment or evaluation to the FCC rules, including the transmitter operation. The host manufacturer has to be aware not to provide information to the end user regarding how to install or remove this RF module in the user's manual of the end product which integrates this

module The end user manual shall include all required regulatory information/warning as show in this manual.

2.4 Limited module procedures

Not applicable The module is a Single module and complies with the requirement of FCC Part 15.212.

2.5 Trace antenna designs

Not applicable The module has its own antenna, and doesn’t need a hosts printed board micro strip trace antenna etc.

2.6 RF exposure considerations

The module must be installed in the host equipment such that at least 20cm is maintained between the antenna and users" body; and if RF exposure statement or module layout is changed, then the host product manufacturer required to take responsibility of the module through a change in FCC ID or new application The FCC ID of the module cannot be used on the final product In these circumstances, the host manufacturer will be responsible for reevaluating the end product (including the transmitter) and obtaining a separate FCC authorization.

2.7 Antennas

Antenna Specification are as follows:

Type: External Antenna

Gain: 5.3dBi Max, 2.4G:3.1dBi; 5G:5.3dBi; 6G:3.7dBi

This device is intended only for host manufacturers under the following conditions: The transmitter module may not be co-located with any other transmitter or antenna; The module shall be only used with the internal antenna(s) that has been originally tested and certified with this module. The antenna must be either permanently attached or employ a “unique" antenna coupler.

As long as the conditions above are met, further transmitter test will not be required However, the host manufacturer is still responsible for testing their end-product for any additional compliance requirements required with this module installed (for example, digital device emissions, PC peripheral requirements, etc).

2.8 Label and compliance information

Host product manufacturers need to provide a physical or e-label stating "Contains FCC ID: 2AEIM-TAF68E" with their finished product.

2.9 Information on test modes and additional testing requirements

Host manufacturer must perform test of radiated & conducted emission and spurious emission, e.t.c according to the actual test modes for a stand-alone modular transmitter in a host, as well as for multiple simultaneously transmitting modules or other transmitters in a host product. Only when all the test results of test modes comply with FCC requirements, then the end product can be sold legally.

2.10 Additional testing, Part 15 Subpart B disclaimer

The modular transmitter is only FCC authorized for FCC Part 15 Subpart C 15.247 & 15 209 &15.407 and that the host product manufacturer is responsible for compliance to any other FCC rules that apply to the

host not covered by the modular transmitter grant of certification. If the grantee markets their product as being Part 15 Subpart B compliant (when it also contains unintentional-radiator digital circuity), then the grantee shall provide a notice stating that the final host product still requires Part 15 Subpart B compliance testing with the modular transmitter installed.

Federal Communication Commission Statement (FCC, U S)

This equipment has been tested and found to comply with the limits for a Class B digital device, pursuant to Part 15 of the FCC Rules These limits are designed to provide reasonable protection against harmful interference in a residential installation This equipment generates, uses and can radiate radio frequency energy and, if not installed and used in accordance with the instructions, may cause harmful interference to radio communications However, there is no guarantee that
interference will not occur in a particular installation If this equipment does cause harmful interference to radio or television reception, which can be determined by turning the equipment off and on, the user is encouraged to try to correct the interference by one of the following measures:

- Reorient or relocate the receiving antenna
- Increase the separation between the equipment and receiver
- Connect the equipment into an outlet on a circuit different from that to which the receiver is connected
- Consult the dealer or an experienced radio/TV technician for help

This device complies with Part 15 of the FCC Rules Operation is subject to the following two conditions: (1) This device may not cause harmful interference, and (2) this device must accept any interference received, including interference that may cause undesired operation.

FCC Caution:

Any changes or modifications not expressly approved by the party responsible for compliance could void the user's authority to operate this equipment.

IMPORTANT NOTES

Co-location warning:

This transmitter must not be co-located or operating in conjunction with any other antenna or transmitter.

OEM integration instructions:

This device is intended only for OEM integrators under the following conditions:

The transmitter module may not be co-located with any other transmitter or antenna The module shall be only used with the external antenna(s) that has been originally tested and certified with this module.

As long as the conditions above are met, further transmitter test will not be required. However, the OEM integrator is still responsible for testing their end-product for any additional compliance requirements required with this module installed (for example, digital device emissions, PC peripheral requirements, etc.).

Validity of using the module certification:

In the event that these conditions cannot be met (for example certain laptop configurations or co-location with another transmitter), then the FCC authorization for this module in combination with the host equipment is no longer considered valid and the FCC ID of the module cannot be used on the final product In these circumstances, the OEM integrator will be responsible for re-evaluating the end product (including the transmitter) and obtaining a separate FCC authorization.

End product labeling:

The final end product must be labeled in a visible area with the following: "Contains Transmitter Module FCC ID: 2AEIM-TAF68E"

Information that must be placed in the end user manual:

The OEM integrator has to be aware not to provide information to the end user regarding how to install or remove this RF module in the user's manual of the end product which integrates this module.The end user manual shall include all required regulatory information/warning as show in this manual.

IC Statement

This device contains licence-exempt transmitter(s)/receiver(s) that comply with Innovation, Science and Economic Development Canada's licence-exempt RSS(s). Operation is subject to the following two conditions:

(1) This device may not cause interference.

(2) This device must accept any interference, including interference that may cause undesired operation of the device.

l'appareil contient des émetteurs/récepteurs exempts de licence qui sont conformes aux CNR exempts de licence d'Innovation, Sciences et Développement économique Canada. L'exploitation est soumise aux deux conditions suivantes :

(1) l'appareil ne doit pas produire de brouillage,

(2) l'utilisateur de l'appareil doit accepter tout brouillage radioélectrique subi, même si le brouillage est susceptible d'en compromettre le fonctionnement.

Product label and user manual requirements

In addition to the labelling requirements in RSS.Gen, this section establishes product label and user manual requirements for RLAN devices.

RLAN devices shall include the following text in the user manual:

Devices shall not be used for control of or communications with unmanned aircraft systems.

IC Radiation Exposure Statement

This equipment complies with IC RSS-102 radiation exposure limits set forth for an uncontrolled environment. This equipment should be installed and operated with minimum distance 20cm between the radiator & your body.

ce matériel est conforme aux limites de dose d'exposition aux rayonnements, CNR-102 énoncée dans un autre environnement.cette eqipment devrait être installé et exploité avec distance minimale de 20 entre le radiateur et votre corps.

This device is intended only for OEM integrators under the followingconditions: (For module device use)

1) The antenna must be installed such that 20 cm is maintained between the antenna and users, and

2) 2) The transmitter module may not be co-located with any other transmitter or antenna.

As long as 2 conditions above are met, further transmitter test will not be required.

However, the OEM integrator is still responsible for testing their end-product for any additional compliance requirements required with this module installed.

Cet appareil est conçu uniquement pour les intégrateurs OEM dans les conditions suivantes: (Pour utilisation de dispositif module)

1) L'antenne doit être installée de telle sorte qu'une distance de 20 cm est respectée entre l'antenne et les utilisateurs, et

2) Le module émetteur peut ne pas être coïmplanté avec un autre émetteur ou antenne.

Tant que les 2 conditions ci-dessus sont remplies, des essais supplémentaires sur l'émetteur ne seront pas nécessaires. Toutefois, l'intégrateur OEM est toujours responsable des essais sur son produit final pour toutes exigences de conformité supplémentaires requis pour ce module installé.

IMPORTANT NOTE:

In the event that these conditions cannot be met (for example certain laptop configurations or colocation with another transmitter), then the Canada authorization is no longer considered valid and the IC ID cannot be used on the final product. In these circumstances, the OEM integrator will be responsible for re-evaluating the end product (including the transmitter) and obtaining a separate Canada authorization.

NOTE IMPORTANTE:

Dans le cas où ces conditions ne peuvent être satisfaites (par exemple pour certaines configurations d'ordinateur portable ou de certaines co-localisation avec un autre émetteur), l'autorisation du Canada n'est plus considéré comme valide et l'ID IC ne peut pas être utilisé sur le produit final. Dans ces circonstances, l'intégrateur OEM sera chargé de réévaluer le produit final (y compris l'émetteur) et l'obtention d'une autorisation distincte au Canada.

End Product Labeling

This transmitter module is authorized only for use in device where the antenna may be installed such that 20 cm may be maintained between the antenna and users. The final end product must be labeled in a visible area with the following: “Contains IC: 20098-TAF68E”.

Plaque signalétique du produit final

Ce module émetteur est autorisé uniquement pour une utilisation dans un dispositif où l'antenne peut être installée de telle sorte qu'une distance de 20cm peut être maintenue entre l'antenne et les utilisateurs. Le produit final doit être étiqueté dans un endroit visible avec l'inscription suivante: "Contient des IC: 20098-TAF68E".

Manual Information To the End User

The OEM integrator has to be aware not to provide information to the end user regarding how to install or remove this RF module in the user’s manual of the end product which integrates this module. The end user manual shall include all required regulatory information/warning as show in this manual.

Manuel d'information à l'utilisateur final

L'intégrateur OEM doit être conscient de ne pas fournir des informations à l'utilisateur final quant à la façon d'installer ou de supprimer ce module RF dans le manuel de l'utilisateur du produit final qui intègre ce module.

Le manuel de l'utilisateur final doit inclure toutes les informations réglementaires requises et

avertissements comme indiqué dans ce manuel.

RSS-247 Section 6.4 (5) (6) (for local area network devices, 5GHz)

The user manual for local area network devices shall contain instructions related to the restrictions mentioned in the above sections, namely that:
(i) the device for operation in the band 5150-5250 MHz is only for indoor use to reduce the potential for harmful interference to co-channel mobile satellite systems;
(ii) the maximum antenna gain permitted for devices in the bands 5250-5350 MHz and 5470-5725 MHz shall comply with the e.i.r.p. limit; and
(iii) the maximum antenna gain permitted for devices in the band 5725-5825 MHz shall comply with the e.i.r.p. limits specified for point-to-point and non point-to-point operation as appropriate.

(i)Les dispositifs fonctionnant dans la bande 5150-5250 MHz sont réservés uniquement pour une utilisation à l'intérieur afin de réduire les risques de brouillage préjudiciable aux systèmes de satellites mobiles utilisant les mêmes canaux.
(ii) le gain d'antenne maximal autorisé pour les appareils dans les bandes 5250-5350 MHz et 5470-5725 MHz doivent respecter le pire limiter; et
(iii) le gain d'antenne maximal autorisé pour les appareils dans la bande 5725-5825 MHz doivent respecter le pire limites spécifiées pour le point-à-point et l'exploitation non point à point, le cas échéant.

Users should also be advised that high-power radars are allocated as primary users (i.e. priority users) of the bands 5250-5350 MHz and 5650-5850 MHz and that these radars could cause interference and/or damage to LE-LAN devices.

Transmitters in the 5.925-7.125 GHz band are prohibited from operating to control or communicate with unmanned aircraft systems.

Les utilisateurs de radars de haute puissance sont désignés utilisateurs principaux (c.-à-d., qu'ils ont la priorité) pour les bandes 5250-5350 MHz et 5650-5850 MHz et que ces radars pourraient causer du brouillage et/ou des dommages aux dispositifs LAN-EL.