Test Report

Verified code: 238655

Report No.: E202409184352-2

Customer:	Huizhou Foryou General Electronics Co., Ltd.
Address:	No.2 District A, Foryou Industry Park, No. 1 North Shangxia Road, Dongjiang Hi tech Industry Park, 516005 Huizhou city, Guangdong Province, China(PROC)
Sample Name:	Intelligent cabin controller
Sample Model:	HS7024
Receive Sample Date:	Sep.18,2024
Test Date:	Sep.20,2024 ~ Oct.12,2024
Reference Document:	FCC CFR Title 47Part 2, FCC CFR Title 47Part 22 Subpart H, FCC CFR Title 47Part 24 Subpart E, FCC CFR Title 47Part 27 Subpart C
Test Result:	Pass

Prepared by: Wen Wenwen Reviewed by: Peng Huarui Approved by: Zhao Zetian

GRG METROLOGY & TEST GROUP CO., LTD.

Issued Date: 2024-10-21

GRG METROLOGY & TEST GROUP CO., LTD.
Address: No.163,Pingyun Road, West of Huangpu Avenue, Guangzhou, Guangdong, China
Tel：（+86）400-602-0999 FAX：（+86）020-38698685 Web：http://www.grgtest.com

Statement

1. The report is invalid without "special seal for inspection and testing"; some copies are invalid; The report is invalid if it is altered or missing; The report is invalid without the signature of the person who prepared, reviewed and approved it.

2. The sample information is provided by the client and responsible for its authenticity; The content of the report is only valid for the samples sent this time.

3. When there are reports in both Chinese and English, the Chinese version will prevail when the language problems are inconsistent.

4. If there is any objection concerning the report, please inform us within 15 days from the date of receiving the report.

5. This testing report is only for scientific research, teaching, internal quality control, etc.

——Blank space below this page——

TABLE OF CONTENTS

1. TEST RESULT SUMMARY 6
1.1 TEST STANDARDS 6
1.2 TEST RESULT 7
2. GENERAL DESCRIPTION OF EUT 12
2.1 APPLICANT 12
2.2 MANUFACTURER 12
2.3 FACTORY 12
2.4 BASIC DESCRIPTION OF EQUIPMENT UNDER TEST 12
2.5 LOCAL SUPPORTIVE INSTRUMENTS 14
2.6 CONFIGURATION OF SYSTEM UNDER TEST 14
2.7 DESIGNATION OF EMISSION 15
3. LABORATORY AND ACCREDITATIONS AND MEASUREMENT UNCERTAINTY 16
3.1 LABORATORY 16
3.2 ACCREDITATIONS 16
3.3 MEASUREMENT UNCERTAINTY 17
4. LIST OF USED TEST EQUIPMENT AT GRGT 18
5. EFFECTIVE (ISOTROPIC) RADIATED POWER OUTPUT DATA 19
5.1 LIMIT 19
5.2 TEST PROCEDURES 19
5.3 TEST SETUP 19
5.4 TEST RESULTS 19
6. PEAK-TO-AVERAGE RATIO 20
6.1 LIMIT 20
6.2 TEST PROCEDURES 20
6.3 TEST SETUP 20
6.4 TEST RESULTS 20
7. MODULATION CHARACTERISTICS 21
7.1 TEST PROCEDURES 21
7.2 TEST SETUP 21
7.3 TEST RESULTS 21
8. BANDWIDTH 22
8.1 LIMIT 22
8.2 TEST PROCEDURES 22
8.3 TEST SETUP 22
8.4 TEST RESULTS 22
9. BAND EDGES COMPLIANCE 23
9.1 LIMIT 23
9.2 TEST PROCEDURES 23
9.3 TEST SETUP 23
9.4 TEST RESULTS 24
10. SPURIOUS EMISSION AT ANTENNA TERMINAL 25
10.1 LIMIT 25
10.2 TEST PROCEDURES 25
10.3 TEST SETUP 25
10.4 TEST RESULTS 26
11. FREQUENCY STABILITY 27
11.1 LIMIT 27

11.2 TEST PROCEDURES 27
11.3 TEST SETUP 27
11.4 TEST RESULTS 27

12. FIELD STRENGTH OF SPURIOUS RADIATION 28

12.1 LIMIT 28
12.2 TEST PROCEDURES 28
12.3 TEST SETUP 29
12.4 DATA SAMPLE 31
12.5 TEST RESULTS 31

13. TEST PHOTO 32

14. PHOTOGRAPH OF THE EUT 33

——Blank space below this page——

REPORT ISSUED HISTORY

Report Version	Report No.	Description	Compile Date
1.0	E202409184352-2	Original Issue	2024-10-15

——Blank space below this page——

1. TEST RESULT SUMMARY

1.1 TEST STANDARDS

No.	Identity	Document Title
1	FCC CFR Title 47 Part 2 Section 2.1047,21049	Frequency Allocations And Radio Treaty Mattres; General Rules And Regulations
2	FCC CFR Title 47 Part 22 Subpart H	Cellular Radiotelephone Service
3	FCC CFR Title 47 Part 24 Subpart E	Broadband PCS
4	FCC CFR Title 47Part 27 Subpart C	Technical Standards

——Blank space below this page——

1.2 TEST RESULT

LTE Band 2			
Item	**FCC Rule No.**	**Requirements**	**Result**
Effective (Isotropic) Radiated Power Output Data	§2.1046, §24.232(c)	EIRP ≤ 2 W	PASS
Peak-Average Ratio	§24.232(d)	Limit≤13 dB	PASS
Modulation Characteristics	§2.1047	Digital modulation	PASS
Bandwidth	§2.1049	OBW: No limit. EBW: No limit.	PASS
Band Edges Compliance	§2.1051, §24.238(a)(b)	≤ -13 dBm/1%*EBW, in 1 MHz bands immediately outside and adjacent to the frequency block.	PASS
Spurious Emission at Antenna Terminals	§2.1051, §24.238(a)(b)	≤ -13 dBm/1MHz	PASS
Field Strength of Spurious Radiation	§2.1053, §24.238(a)	≤ -13 dBm/1MHz.	PASS
Frequency Stability	§2.1055, §24.235	Stay within the authorized bands of operation	PASS

——Blank space below this page——

LTE Band 4			
Item	**FCC Rule No.**	**Requirements**	**Result**
Effective (Isotropic) Radiated Power Output Data	§2.1046, §27.50(d)(4)	EIRP ≤1 W	PASS
Peak-Average Ratio	§27.50(d)(5)	Limit≤13 dB	PASS
Modulation Characteristics	§2.1047	Digital modulation	PASS
Bandwidth	§2.1049	OBW: No limit. EBW: No limit.	PASS
Band Edges Compliance	§2.1051, §27.53(h)(1) §27.53(h)(3)(i)	≤ -13 dBm/1%*EBW, in 1 MHz bands immediately outside and adjacent to the frequency block.	PASS
Spurious Emission at Antenna Terminals	§2.1051, §27.53(h)(1)	≤ -13 dBm/1MHz	PASS
Field Strength of Spurious Radiation	§2.1053, §27.53(h)(1)	≤ -13 dBm/1MHz.	PASS
Frequency Stability	§2.1055, §27.54	Stay within the authorized bands of operation	PASS

——Blank space below this page——

LTE Band 5			
Item	**FCC Rule No.**	**Requirements**	**Result**
Effective (Isotropic) Radiated Power Output Data	§2.1046, §22.913(a)(5)	ERP ≤ 7W	PASS
Peak-Average Ratio	§22.913(d)	≤ 13 dB	PASS
Modulation Characteristics	§2.1047	Digital modulation	PASS
Bandwidth	§2.1049	OBW: No limit. EBW: No limit.	PASS
Band Edges Compliance	§2.1051, §22.917(b)(1)	≤ -13 dBm/1%*EBW, in 1 MHz bands immediately outside and adjacent to the frequency block.	PASS
Spurious Emission at Antenna Terminals	§2.1051, §22.917(a)	≤ -13 dBm/100kHz	PASS
Field Strength of Spurious Radiation	§2.1053, §22.917(a)	≤ -13 dBm/100kHz	PASS
Frequency Stability	§2.1055, §22.355	±2.5ppm.	PASS

——Blank space below this page——

LTE Band 12/17			
Item	**FCC Rule No.**	**Requirements**	**Result**
Effective (Isotropic) Radiated Power Output Data	§2.1046, §27.50(c)(10)	ERP ≤3W	PASS
Peak-Average Ratio	N/A	≤ 13 dB	PASS
Modulation Characteristics	§2.1047	Digital modulation	PASS
Bandwidth	§2.1049	OBW: No limit. EBW: No limit.	PASS
Band Edges Compliance	§2.1051, §27.53(g)	≤ -13 dBm/1%*EBW, in 1 MHz bands immediately outside and adjacent to the frequency block.	PASS
Spurious Emission at Antenna Terminals	§2.1051, §27.53(g)	≤ -13 dBm/100kHz.	PASS
Field Strength of Spurious Radiation	§2.1053, §27.53(g)	≤ -13 dBm/100kHz.	PASS
Frequency Stability	§2.1055, §27.54	Stay within the authorized bands of operation	PASS

——Blank space below this page——

LTE Band 13			
Item	**FCC Rule No.**	**Requirements**	**Result**
Effective (Isotropic) Radiated Power Output Data	§2.1046, §27.50(b)(10)	ERP ≤3W	PASS
Peak-Average Ratio	N/A	≤ 13 dB	PASS
Modulation Characteristics	§2.1047	Digital modulation	PASS
Bandwidth	§2.1049	OBW: No limit. EBW: No limit.	PASS
Band Edges Compliance	§2.1051, §27.53(c)(2), §27.53(c)(5)	Refer to section 10.1	PASS
Spurious Emission at Antenna Terminals	§2.1051, §27.53(c)(2)	≤ -13 dBm/100kHz.	PASS
Field Strength of Spurious Radiation	§2.1053, §27.53(c)(2), §27.53(f)	≤ -13 dBm/100kHz. Emissions in the band 1559-1610 MHz shall be limited to −70 dBW/MHz	PASS
Frequency Stability	§2.1055, §27.54	Stay within the authorized bands of operation	PASS

——Blank space below this page——

2. GENERAL DESCRIPTION OF EUT

2.1 APPLICANT

Name:	Huizhou Foryou General Electronics Co., Ltd.
Address:	No.2 District A, Foryou Industry Park, No. 1 North Shangxia Road, Dongjiang Hi tech Industry Park, 516005 Huizhou city, Guangdong Province, China(PROC)

2.2 MANUFACTURER

Name:	Huizhou Foryou General Electronics Co., Ltd.
Address:	No.2 District A, Foryou Industry Park, No. 1 North Shangxia Road, Dongjiang Hi tech Industry Park, 516005 Huizhou city, Guangdong Province, China(PROC)

2.3 FACTORY

Name:	Huizhou Foryou General Electronics Co., Ltd.
Address:	No.2 District A, Foryou Industry Park, No. 1 North Shangxia Road, Dongjiang Hi tech Industry Park, 516005 Huizhou city, Guangdong Province, China(PROC)

2.4 BASIC DESCRIPTION OF EQUIPMENT UNDER TEST

Equipment:	Intelligent cabin controller
Model No.:	HS7024
Trade Mark:	ADAYO
FCC ID:	2AEIN-HS7024
Power Supply:	DC 12V
Battery:	Ni-MH BATTERY AA1000mAh, LTT-HS7012A, LTT-AAP1000X3 3.6V
Hardware Version:	B.0.1
Software Version:	SWC.0007
Antenna Type:	Internal antenna
Antenna Gain:	Band 2:3.62dBi Band 4: 3.69dBi Band 5:2.37dBi Band 12:-1.06dBi Band 13: 0.84dBi Band 17:-1.06dBi
Power Class:	3
Frequency range:	Band 2: Tx 1850MHz~1910MHz, Rx 1930MHz ~ 1990MHz Band 4: Tx 1710MHz~1755MHz, Rx 2110MHz ~ 2155MHz Band 5: Tx 824MHz~849MHz, Rx 869MHz ~ 894MHz Band 12: Tx 699MHz~716MHz, Rx 729MHz ~ 746MHz Band 13: Tx 777MHz~787MHz, Rx 746MHz ~ 756MHz Band 17: Tx 704MHz~716MHz, Rx 734MHz ~ 746MHz
Bandwidth:	Band 2: 1.4MHz, 3MHz, 5MHz, 10MHz, 15MHz, 20MHz Band 4: 1.4MHz, 3MHz, 5MHz, 10MHz, 15MHz, 20MHz Band 5: 1.4MHz, 3MHz, 5MHz, 10MHz Band 12: 1.4MHz, 3MHz, 5MHz, 10MHz Band 13: 5MHz, 10MHz

	Band 17: 5MHz, 10MHz
Modulation:	QPSK, 16QAM
Sample No.:	E202409184352-0001, E202409184352-0002
IMEI:	E202409184352-0001:865865030109235; E202409184352-0002:865865030109300;
Temperature Range:	-40℃~75℃
Voltage Range:	9V~16V
Sample Submitting Way:	■Provided by customer □Sampling
Note:	1.The EUT antenna gain is provided by the applicant. This report is made solely on the basis of such data and/or information. We accept no responsibility for the authenticity and completeness of the above data and information and the validity of the results and/or conclusions. 2. This EUT (Intelligent cabin controller) the model name HS7024 with High, Low two configuration. The two configuration have the same technical construction including circuit diagram, PCB LAYOUT, hardware version, software, except the High configuration with full function but the Low configuration without some functions as below table. These difference which are not affect the RF performance. So only tested the high configuration of HS7024.

HS7024 Function	Configuration	
	High	Low
4MIC port	Y	N
DMS port	Y	N
Ethernet port	Y	N
Support PTZ camera port	Y	N
Integrated projection headlights port	Y	N

——Blank space below this page——

2.5 LOCAL SUPPORTIVE INSTRUMENTS

No.	Name of equipment	Manufacturer	Model	Serial number	Note
A	Dc Source	LW	PS-305DM	180704439	/
B	Dc Source	Keysight	E36231A	MY59001139	
C	Horn antenna	/	/	/	/
D	Wideband radio Communication Tester	R&S	CMW500	144611-nC	/

No.	Cable Type	Qty.	Shielded Type	Ferrite Core(Qty.)	Length
1	DC cable	1	No	0	0.8m
2	RF cable	1	Yes	0	5m

2.6 CONFIGURATION OF SYSTEM UNDER TEST

RF Conducted:

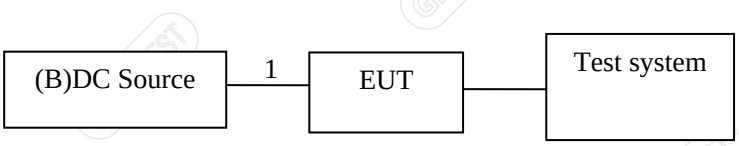

Field Strength of Spurious Radiation:

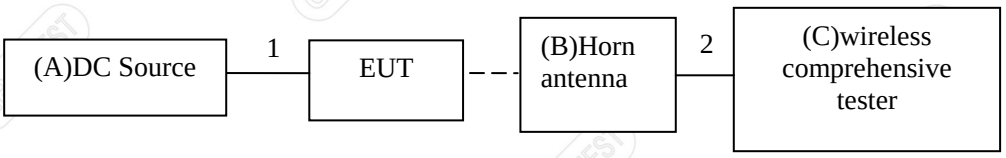

2.7 DESIGNATION OF EMISSION

Designation Of Emission			
Band	Bandwidth(MHz)	QPSK	16QAM
Band 2	1.4	1M10G7D	1M10W7D
	3	2M70G7D	2M70W7D
	5	4M51G7D	4M53W7D
	10	8M98G7D	8M98W7D
	15	13M5G7D	13M5W7D
	20	17M9G7D	17M9W7D

Designation Of Emission			
Band	Bandwidth(MHz)	QPSK	16QAM
Band 4	1.4	1M10G7D	1M10W7D
	3	2M70G7D	2M70W7D
	5	4M51G7D	4M51W7D
	10	8M98G7D	8M98W7D
	15	13M5G7D	13M5W7D
	20	17M9G7D	17M9W7D

Designation Of Emission			
Band	Bandwidth(MHz)	QPSK	16QAM
Band 5	1.4	1M10G7D	1M10W7D
	3	2M70G7D	2M69W7D
	5	4M51G7D	4M51W7D
	10	9M00G7D	8M99W7D

Designation Of Emission			
Band	Bandwidth(MHz)	QPSK	16QAM
Band 12	1.4	1M10G7D	1M10W7D
	3	2M70G7D	2M69W7D
	5	4M51G7D	4M53W7D
	10	8M98G7D	8M98W7D

Designation Of Emission			
Band	Bandwidth(MHz)	QPSK	16QAM
Band 13	5	4M51G7D	4M51W7D
	10	8M98G7D	8M96W7D

Designation Of Emission			
Band	Bandwidth(MHz)	QPSK	16QAM
Band 17	5	4M51G7D	4M51W7D
	10	8M96G7D	8M97W7D

3. LABORATORY AND ACCREDITATIONS AND MEASUREMENT UNCERTAINTY

3.1 LABORATORY

The tests & measurements refer to this report were performed by Shenzhen EMC Laboratory of GRG METROLOGY & TEST GROUP CO., LTD.

Add.:	No.1301 Guanguang Road Xinlan Community, Guanlan Street, Longhua District Shenzhen, 518110, People's Republic of China.
P.C.:	518110
Tel :	0755-61180008
Fax:	0755-61180008

3.2 ACCREDITATIONS

Our laboratoriesare accredited and approved by the following approval agencies according to GB/T 27025(ISO/IEC 17025:2017)

USA	A2LA(Certificate #2861.01)

The measuring facility of laboratories has been authorized or registered by the following approval agencies.

Canada	ISED (Company Number: 24897，CAB identifier:CN0069)
USA	FCC (Registration Number: 759402，Designation Number:CN1198)

Copies of granted accreditation certificates are available for downloading from our web site, http://www.grgtest.com

——Blank space below this page——

3.3 MEASUREMENT UNCERTAINTY

Where relevant, the following measurement uncertainty levels have been estimated for tests performed on the EUT as specified in CISPR 16-4-2:

Measurement		Frequency	Uncertainty
Radiated Emission	Horizontal	30MHz～200MHz	4.6dB
		200MHz～1000MHz	4.8dB
		1GHz～18GHz	5.0dB
		18GHz~40GHz	5.2dB
	Vertical	30MHz～200MHz	4.7dB
		200MHz～1000MHz	4.7dB
		1GHz～18GHz	5.1dB
		18GHz~40GHz	5.4dB
	Coaxial	9kHz～30MHz	4.4dB
	Coplanar	9kHz～30MHz	4.4dB

Measurement	Uncertainty
RF frequency	7.5×10^{-6}MHz
RF power conducted	400MHz～3000MHz:0.55dB
	3000MHz～6000MHz:0.54dB
Occupied channel bandwidth	1.4 MHz:7.7kHz
	3MHz:11kHz
	5MHz:15kHz
	10MHz:25kHz
	15MHz:35kHz
	20MHz:45kHz
Unwanted emission, conducted	9kHz~3.6GHz:1.5dB
	3.6GH~7.5GH: 1.5dB
	7.5GHz~13.6GHz: 2.6dB
	13.6GHz~26GHz: 3.2dB

This uncertainty represent an expanded uncertainty expressed at approximately the 95% confidence level using a coverage factor of *k*=2.

4. LIST OF USED TEST EQUIPMENT AT GRGT

Conduted System :

Name of Equipment	Manufacturer	Model	Serial Number	Calibration Due
Spectrum Analyzer	Keysight	N9010B	MY60680122	2025-03-01
Wideband radio Communication Tester	R&S	CMW500	108083	2025-04-10
Temperature& humidity chamber	HT	SMC-22PF	H12204211060-1	2024-12-14
RF switch box	Tonscend	JS0806-1	20D8060250	/
Dc Source	Keysight	E36231A	MY59001139	2025-09-08
Test SW	Tonscend	JS1120/3.1.46		

RSE system:

Name of Equipment	Manufacturer	Model	Serial Number	Calibration Due
Loop Antenna	Schwarzbeck	FMZB 1513-60	1513-60-56	2025-05-07
Preamplifier	SHIRONG ELECTRONIC	DLNA-30M1G-G 40	20200928001	2025-01-30
Bi-log Antenna	Schwarzbeck	VULB9160	VULB9160-3402	2025-09-24
Horn Antenna	Schwarzbeck	BBHA 9120D	02143	2025-06-15
Test Receiver	R&S	ESR26	101758	2025-09-10
Spectrum Analyzer	Agilent	N9010A	MY52221469	2025-04-19
Board-Band Horn Antenna	Schwarzbeck	BBHA 9170	BBHA 9170-497	2025-08-24
Amplifier	Tonscend	TAP01018048	AP20E8060075	2025-03-01
Amplifier	Tonscend	TAP184050	AP20E806071	2025-03-01
Amplifier	SHIRONG ELECTRONIC	DLNA-1G18G-G 40	20200928005	2025-07-19
Test S/W	Tonscend	JS36-RE/2.5.1.5		

Note: The calibration interval of the above test instruments is 12 months.

5. EFFECTIVE (ISOTROPIC) RADIATED POWER OUTPUT DATA

5.1 LIMIT

According to FCC section22.913 (a)(5), the ERP of mobile transmitters and auxiliary test transmitters must not exceed 7 watts.(B5)
According to FCC section24.232 (c) the mobile and portable stations are limited to 2 watts EIRP.(B2)
According to FCC section27.50 (d)(4), mobile, and portable (hand-held) stations operating in the 1710-1755 MHz band and mobile and portable stations operating in the 1695-1710 MHz and 1755-1780 MHz bands are limited to 1 watt EIRP.(B4)
According to FCC section27.50 (h)(2), Mobile stations are limited to 2.0 watts EIRP. All user stations are limited to 2.0 watts transmitter output power.(B7/38/41)
According to FCC section27.50 (c)(10), Portable stations (hand-held devices) in the 600 MHz uplink band and the 698-746 MHz band, and fixed and mobile stations in the 600 MHz uplink band are limited to 3 watts ERP.(B12/17)
According to FCC section27.50 (b)(10), Portable stations (hand-held devices) transmitting in the 746-757 MHz, 776-788 MHz, and 805-806 MHz bands are limited to 3 watts ERP.(B13)

5.2 TEST PROCEDURES

Measurement Procedure: FCC KDB 971168 D01 V03r01

1. Connect the test system to the UE antenna connector.
2. A call is set up according to the Generic call setup procedure.
3. Set and send continuously up power control commands to the UE, until the UE output power shall be maximum level.
4. Read the conducted power in the base station.

Remark:

a: For getting the EIRP (Efficient Isotropic Radiated Power) in substitution method, the following formula should be taken to calculate it,

EIRP [dBm] = Conducted output power [dBm] + Gain [dBi]

ERP [dBm] = Conducted output power [dBm] +Gain [dBi]-2.15dB

P [dBm]=10lg(P/1mw)

5.3 TEST SETUP

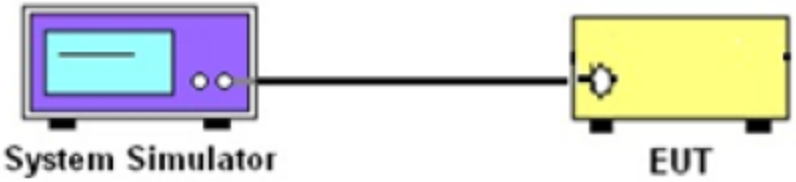

5.4 TEST RESULTS

Please refer to ANNEX A of the E202409184352-2 document for this test data.

6. PEAK-TO-AVERAGE RATIO

6.1 LIMIT

According to FCC section 24.232(d), 27.50 (d)(5), the peak to average ratio (PAR) of the transmission may not exceed 13dB.

6.2 TEST PROCEDURES

Measurement Procedure: FCC KDB 971168 D01 V03r01 Section 5.7.1
A peak to average ratio measurement is performed at the conducted port of the EUT. For WWAN signals, the spectrum analyzers Complementary Cumulative Distribution Function (CCDF) measurement profile is used to determine the largest deviation between the average and the peak power of the EUT in a given bandwidth. The CCDF curve shows how much time the peak waveform spends at or above a given average power level. The percent of time the signal spends at or above the level defines the probability for that particular power level.

Test Settings
1.The signal analyzer's CCDF measurement profile is enabled
2. Frequency = carrier center frequency
3. Measurement BW>Emission bandwidth of signal
4. The signal analyzer was set to collect one million samples to generate the CCDF curve
5. The measurement interval was set depending on the type of signal analyzed. For continuous signals (>98% duty cycle), the measurement interval was set to 1ms. For burst transmissions, the spectrum analyzer is set to use an internal "RF Burst" trigger that is synced with an incoming pulse and the measurement interval is set to less than the duration of the "on time" of one burst to ensure that energy is only captured during a time in which the transmitter is operating at maximum power

6.3 TEST SETUP

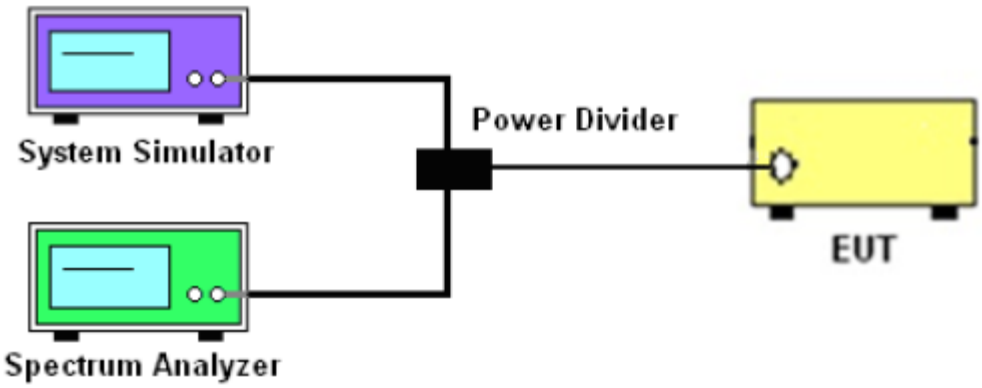

6.4 TEST RESULTS

Please refer to ANNEX C of the E202409184352-2 document for this test data.

7. MODULATION CHARACTERISTICS

7.1 TEST PROCEDURES

The devices may employ any type of modulation techniques. The type of modulation used must be reported.

7.2 TEST SETUP

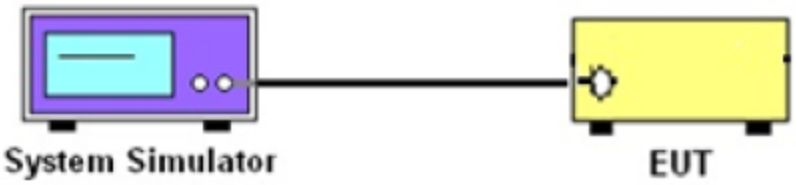

7.3 TEST RESULTS

Please refer to ANNEX C of the E202409184352-2 document for this test data.

——Blank space below this page——

8. BANDWIDTH

8.1 LIMIT

According to FCC section 2.1049, OBW and EBW no limit.

8.2 TEST PROCEDURES

The occupied bandwidth, that is the frequency bandwidth such that, below its lower and above its upper frequency limits, the mean powers radiated are each equal to 0.5 percent of the total mean power radiated by a given emission shall be measured. The transmitter output was connected to a calibrated coaxial cable, attenuator and Spectrum analyser, the other end of which was connected to a Base Station Simulator. The Base Station Simulator was set to force the EUT to its maximum power setting. The tests were performed at three frequencies (low channel, middle channel and high channel).The span of the analyzer shall be set to capture all products of the modulation process, including the emission skirts. The resolution bandwidth shall be set to as close to 1 percent of the selected span as is possible without being below 1 percent. The video bandwidth shall be set to 3 times the resolution bandwidth. Video averaging is not permitted. Where practical, a sampling detector shall be used since a peak or, peak hold, may produce a wider bandwidth than actual. The trace data points are recovered and are directly summed in linear terms. The recovered amplitude data points, beginning at the lowest frequency, are placed in a running sum until 0.5 percent of the total is reached and that frequency recorded. The process is repeated for the highest frequency data points. This frequency is recorded. The span between the two recorded frequencies is the occupied bandwidth.

Test Settings

1. The signal analyzer's automatic bandwidth measurement capability was used to perform the 99% occupied bandwidth and the 26dB bandwidth. The bandwidth measurement was not influenced by any intermediate power nulls in the fundamental emission.
2. RBW=1-5% of the expected OBW
3. VBW≥3×RBW
4. Detector = Peak
5. Trace mode = max hold
6. Sweep = auto couple
7. The trace was allowed to stabilize
8. If necessary, steps 2 – 7 were repeated after changing the RBW such that it would be within 1- 5% of the 99% occupied bandwidth observed in Step 7

8.3 TEST SETUP

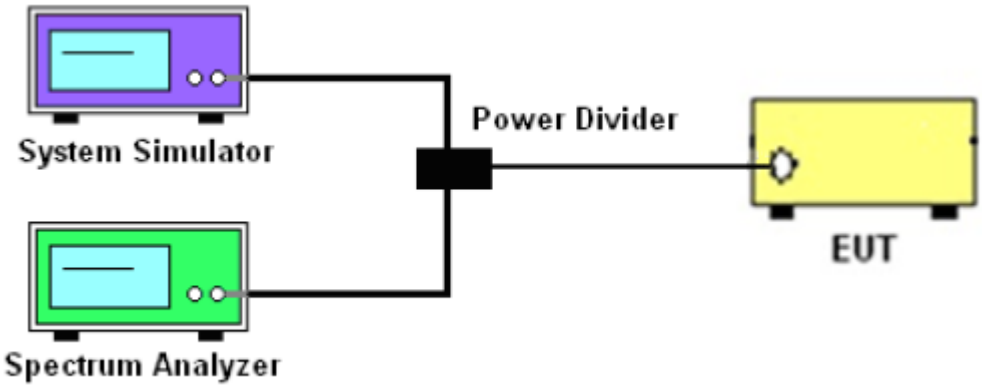

8.4 TEST RESULTS

Please refer to ANNEX D of the E202409184352-1 document for this test data.

9. BAND EDGES COMPLIANCE

9.1 LIMIT

According to FCC section 22.917(a), 24.238(a)(b), 27.53(h)(1)(3)(i), the power of any emission outside of the authorized operating frequency ranges must be attenuated below the transmitting power (P) by a factor of at least 43+10log(P) dB. (B2/4/5)
According to FCC section 27.53(m)(4), For mobile digital stations, the attenuation factor shall be not less than 40+10log (P) dB on all frequencies between the channel edge and 5 megahertz from the channel edge, 43+10log (P) dB on all frequencies between 5 megahertz and X megahertz from the channel edge, and 55+10log (P) dB on all frequencies more than X megahertz from the channel edge, where X is the greater of 6 megahertz or the actual emission bandwidth as defined in paragraph (m)(6) of this section. In addition, the attenuation factor shall not be less that 43+10log(P) dB on all frequencies between 2490.5 MHz and 2496 MHz and 55+10log(P) dB at or below 2490.5 MHz. (B7/38/41)
According to FCC section 27.53(9), For operations in the 600 MHz band and the 698-746 MHz band, the power of any emission outside a licensee's frequency band(s) of operation shall be attenuated below the transmitter power (P) within the licensed band(s) of operation, measured in watts, by at least 43+10log(P) dB. (B12/17)
According to FCC section 27.53(c)(3), On any frequency outside the 776-788 MHz band, the power of any emission shall be attenuated outside the band below the transmitter power (P) by at least 43+10log(P) dB. (B13)

9.2 TEST PROCEDURES

Measurement Procedure: FCC KDB 971168 D01 V03r01 Section 6
The transmitter output was connected to a calibrated coaxial cable, attenuator and Spectrum analyser, the other end of which was connected to a Base Station Simulator. The Base Station Simulator was set to force the EUT to its maximum power setting. The tests were performed at two frequencies (low channel and high channel).in the 1MHz bands immediately outside and adjacent to the frequency block a resolution bandwidth of 100kHz or 1% of the emission bandwidth of the fundamental emission of the transmitter may be employed. The EUT emission bandwidth is measured as the width of the signal between two points, outside of which all emission are attenuated at least 26dB below the transmitter power. The video bandwidth of the spectrum analyzer was set at thrice the resolution bandwidth. Detector Mode was set to peak or peak hold power.

Test Settings
1. Start and stop frequency were set such that the band edge would be placed in the center of the plot
2. Span was set large enough so as to capture all out of band emissions near the band edge
3. RBW ≥ 1% of the emission bandwidth
4. VBW ≥ 3 ×RBW
5. Detector = RMS
6. Number of sweep points ≥ 2 ×Span/RBW
7. Trace mode = trace average for continuous emissions, max hold for pulse emissions
8. Sweep time = auto couple
9. The trace was allowed to stabilize

9.3 TEST SETUP

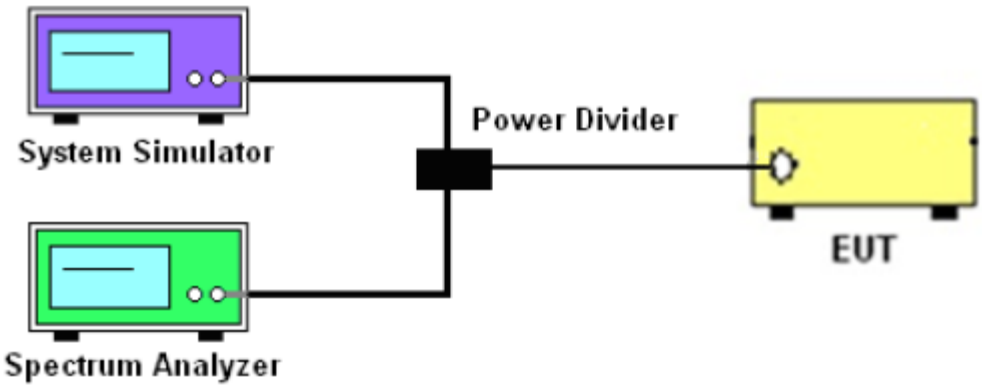

9.4 TEST RESULTS

Please refer to ANNEX E of the E202409184352-2 document for this test data.

——Blank space below this page——

10. SPURIOUS EMISSION AT ANTENNA TERMINAL

10.1 LIMIT

According to FCC section 22.917(a), 24.238(a)(b),27.53(h)(1), the power of any emission outside of the authorized operating frequency ranges must be attenuated below the transmitting power (P) by a factor of at least 43+10log(P) dB.
According to FCC section 27.53(m)(4), 55+10log(P) dB on all frequencies more than X megahertz from the channel edge, where X is the greater of 6 megahertz or the actual emission bandwidth as defined in paragraph (m)(6) of this section. and 55+10 log (P) dB at or below 2490.5 MHz.
According to FCC section 27.53(9), For operations in the 600 MHz band and the 698-746 MHz band, the power of any emission outside a licensee's frequency band(s) of operation shall be attenuated below the transmitter power (P) within the licensed band(s) of operation, measured in watts, by at least 43+10log(P) dB.
According to FCC section 27.53(c)(3), On any frequency outside the 776-788 MHz band, the power of any emission shall be attenuated outside the band below the transmitter power (P) by at least 43+10log(P) dB.

10.2 TEST PROCEDURES

Measurement Procedure: FCC KDB 971168 D01 V03r01
The transmitter output was connected to a calibrated coaxial cable, attenuator and Spectrum analyzer, the other end of which was connected to a Base Station Simulator. The Base Station Simulator was set to force the EUT to its maximum power setting. The tests were performed at three frequencies (low channel and high channel).The level of the carrier and the various conducted spurious and harmonic frequencies is measured by means of a calibrated spectrum analyzer. The spectrum is scanned from the lowest frequency generated in the equipment up to a frequency including its 10th harmonic. On any frequency outside a licensee's frequency block, the power of any emission shall be attenuated below the transmitter power (P) by at least 43 + 10 log(P) dB. Compliance with these provisions is based on the use of measurement instrumentation employing a resolution bandwidth of 1 MHz or greater. However, in the 1 MHz bands immediately outside and adjacent to the frequency block a resolution bandwidth of at least one percent of the emission bandwidth of the fundamental emission of the transmitter may be employed. The emission bandwidth is defined as the width of the signal between two points, one below the carrier center frequency and one above the carrier center frequency, outside of which all emission are attenuated at least 26 dB below the transmitter power.

Test Settings
1. Start frequency was set to 30MHz and stop frequency was set to at least 10*the fundamental frequency (separated into at least two plots per channel)
2. Detector=RMS
3. Trace mode = trace average for continuous emissions, max hold for pulse emissions
4. Sweep time = auto couple
5. The trace was allowed to stabilize
6. Please see test notes below for RBW and VBW settings

Remark:
The disturbance below 30MHz was very low, and the above harmonics were the highest point could be found when testing, so only the worst case data had been displayed.

10.3 TEST SETUP

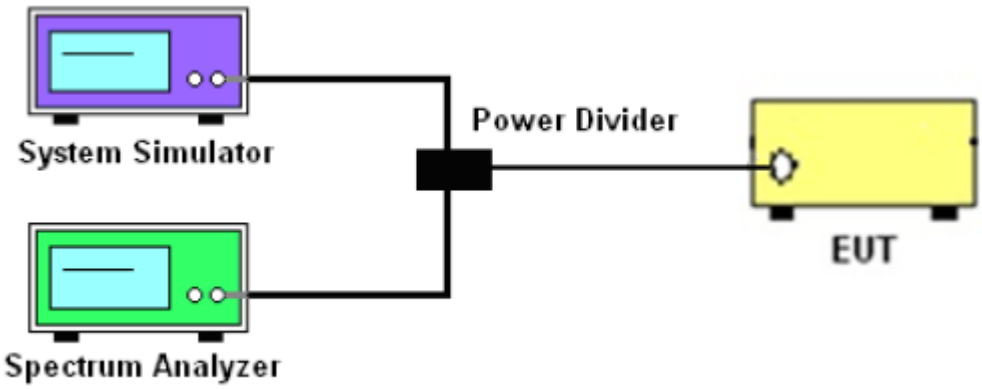

10.4 TEST RESULTS

Please refer to ANNEX F of the E202409184352-2 document for this test data.

——Blank space below this page——

11. FREQUENCY STABILITY

11.1 LIMIT

According to FCC section 22.355, frequency stability of the transmission may not exceed ±2.5ppm.
According to FCC section 24.235,section 27.54, the frequency stability shall be sufficient to ensure that the fundamental emissions stay within the authorized bands of operation..

11.2 TEST PROCEDURES

Measurement Procedure: FCC KDB 971168 D01 V03r01 Section 9

Frequency stability over variations in temperature

1. The EUT was set up in the thermal chamber and connected with the base station.
2. With power off, temperature was decreased to -30 ℃ and EUT was stabilized before testing. Power was applied and the maximum change in frequency was recorded within one minute.
3. With power off, the temperature was rised in -30 ℃ step up to 50 ℃. The EUT was stabilizes at each step for at least half an hour at. Power was applied the maximum frequency change was recorded within one minute.

Frequency stability when varying supply voltage

1. The EUT was placed in a temperature chamber at 20±5 ℃ and connected with the system simulator.
2. The power supply voltage to the EUT was varied from 85% to 115% of the nominal value for other than hand carried battery equipment..
3. For hand carried battery powered equipment, reduce the primary AC or DC supply voltage to the battery operating end point, which shall be specified by the manufacturer.
4. Whether the transmitter carrier frequency signal of LTE band5 is within +2.5ppm; Other bands test whether FL and FH of 99% OBW are within the authorized bands of operation.

Test Settings

N/A

11.3 TEST SETUP

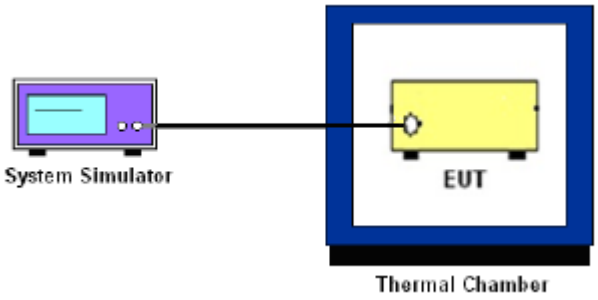

11.4 TEST RESULTS

Please refer to ANNEX G of the E202409184352-2 document for this test data.

12. FIELD STRENGTH OF SPURIOUS RADIATION

12.1 LIMIT

According to FCC section 22.917(a), 24.238(a),27.53(h)(1), the power of any emission outside of the authorized operating frequency ranges must be attenuated below the transmitting power (P) by a factor of at least 43+10log(P) dB.
According to FCC section 27.53(m)(4), 55 + 10 log (P) dB on all frequencies more than X megahertz from the channel edge, where X is the greater of 6 megahertz or the actual emission bandwidth as defined in paragraph (m)(6) of this section. and 55+10log(P) dB at or below 2490.5 MHz.
According to FCC section 27.53(g), For operations in the 600 MHz band and the 698-746 MHz band, the power of any emission outside a licensee's frequency band(s) of operation shall be attenuated below the transmitter power (P) within the licensed band(s) of operation, measured in watts, by at least 43+10log(P) dB.
According to FCC section 27.53(c)(3), On any frequency outside the 776-788 MHz band, the power of any emission shall be attenuated outside the band below the transmitter power (P) by at least 43+10log(P) dB.
According to FCC section 27.53(a)(4), 70+10log(P) dB below 2288 MHz and not less than 70+10log(P) dB above 2365 MHz.
According to FCC section 27.53(f),For operations in the 746-758 MHz, 775-788 MHz, and 805-806 MHz bands, emissions in the band 1559-1610 MHz shall be limited to −70 dBW/MHz equivalent isotropically radiated power (EIRP) for wideband signals. −70 dBW/MHz=-40dBm/ MHz

12.2 TEST PROCEDURES

Measurement Procedure: FCC KDB 971168 D01 V03r01 Section 7
Below 1GHz test procedure as below:
1). The EUT was powered ON and placed on a 80cm high table in the chamber. The antenna of the transmitter was extended to its maximum length.
2). The disturbance of the transmitter was maximized on the test receiver display by raising and lowering from 1m to 4m (for the test frequency of below 30MHz, the antenna was tuned to heights 1 meter) the receive antenna and by rotating through 360 °the turntable. After the fundamental emission was maximized, a field strength measurement was made.
3). Steps 1) and 2) were performed with the EUT and the receive antenna in both vertical and horizontal polarization.

4). The transmitter was then removed and replaced with another antenna. The center of the antenna was approximately at the same location as the center of the transmitter.
5). A signal at the disturbance was fed to the substitution antenna by means of a non-radiating cable. With both the substitution and the receive antennas horizontally polarized, the receive antenna was raised and lowered to obtain a maximum reading at the test receiver. The level of the signal generator was adjusted until the measured field strength level in step 2) is obtained for this set of conditions.
6). The output power into the substitution antenna was then measured.
7). Steps 5) and 6) were repeated with both antennas polarized.
8) Calculate power in dBm by the following formula:
ERP(dBm) = Pg(dBm) – cable loss (dB) + antenna gain (dBd)
Where:
Pd is the dipole equivalent power, Pg is the generator output into the substitution antenna, and the antenna gain is the gain of the substitute antenna used relative to either a half-wave dipole (dBd) or an isotropic source (dBi). The substitute level is equal to Pg [dBm] – cable loss [dB]. The calculated Pd levels are then compared to the absolute spurious emission limit of -13dBm which is equivalent to the required minimum attenuation of 43 + 10log10(Power [Watts]).
Above 1GHz test procedure as below:
1.Different between above is the test site, change from Semi- Anechoic Chamber to fully Anechoic Chamber
2.Calculate power in dBm by the following formula:
EIRP(dBm) = Pg(dBm) – cable loss (dB) + antenna gain (dBi)
EIRP=ERP+2.15dB
Where:
Pg is the generator output power into the substitution antenna.
3. Test the EUT in the lowest channel, the middle channel the Highest channel
4. The radiation measurements are performed in X, Y, Z axis positioning. And found the X axis positioning which it is worse case, Only the test worst case mode is recorded in the report.

5. Repeat above procedures until all frequencies measured was complete

Test Settings

1. Start frequency was set to 30MHz and stop frequency was set to at least 10*the fundamental frequency (separated into at least two plots per channel)
2.RBW=100kHz for emission below 1GHz and 1MHz for emission above 1GHz.
3.Number of sweep point≥2*span/RBW
4. Detector=RMS
5. Trace mode = trace average for continuous emissions, max hold for pulse emissions
6. The trace was allowed to stabilize

12.3 TEST SETUP

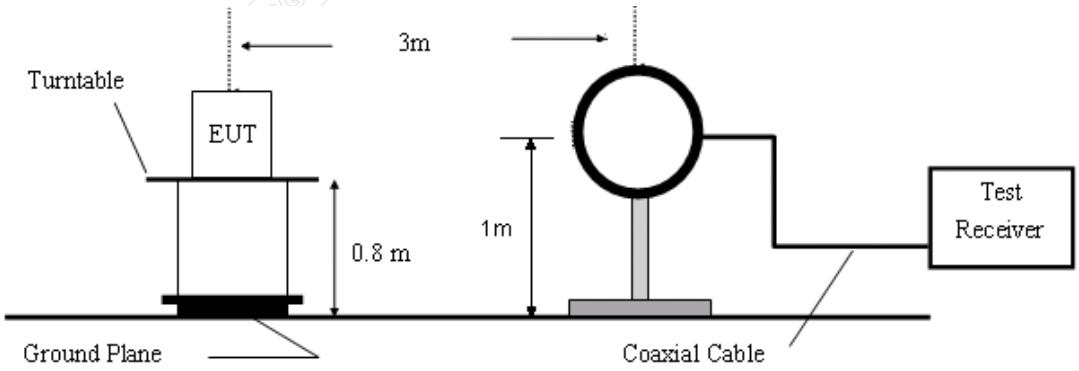

Figure 1. 9kHz to 30MHz radiated emissions test configuration

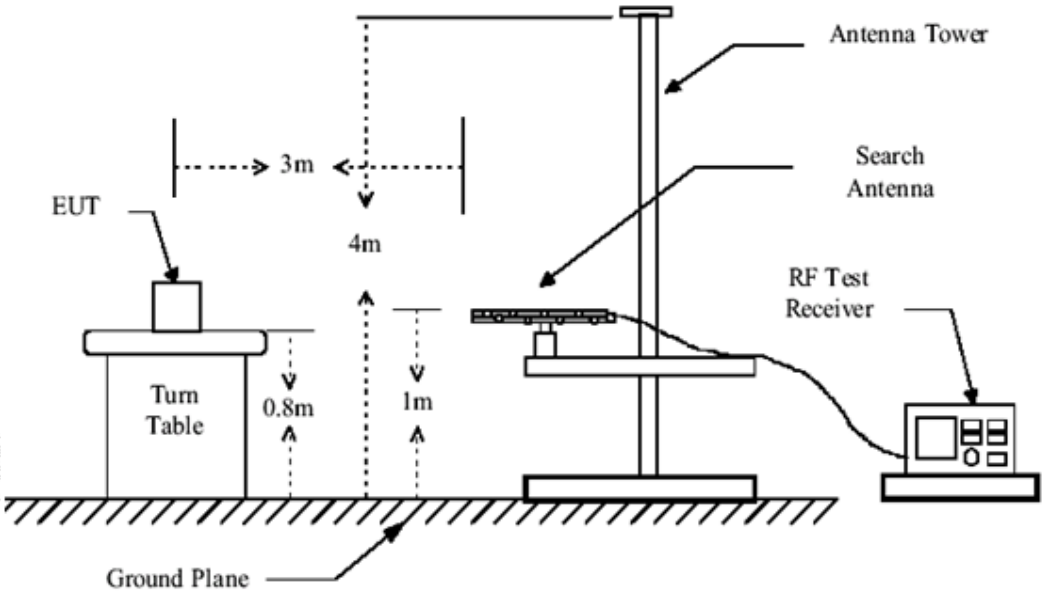

Figure 2. 30MHz to 1GHz radiated emissions test configuration

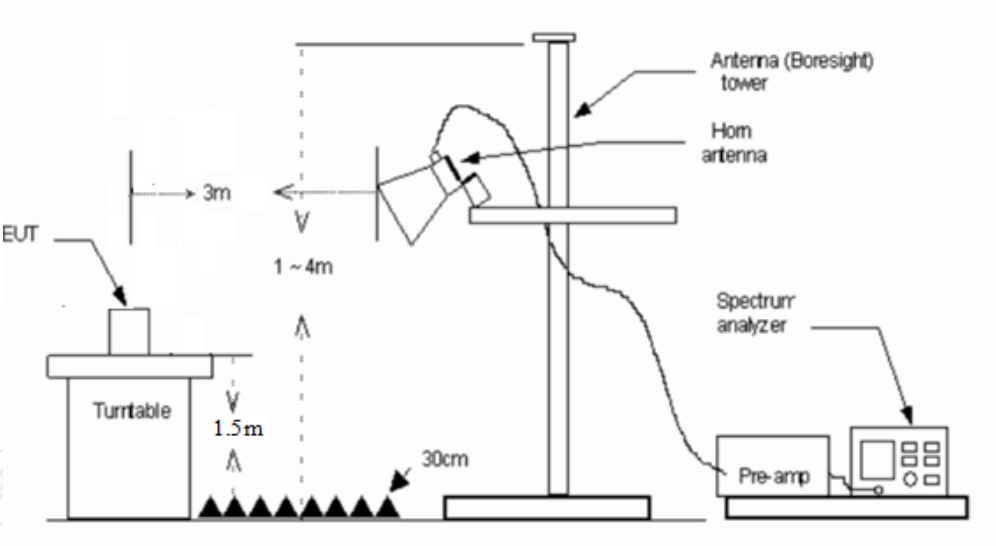

Figure 3. 1GHz-18GHz radiated emissions test configuration

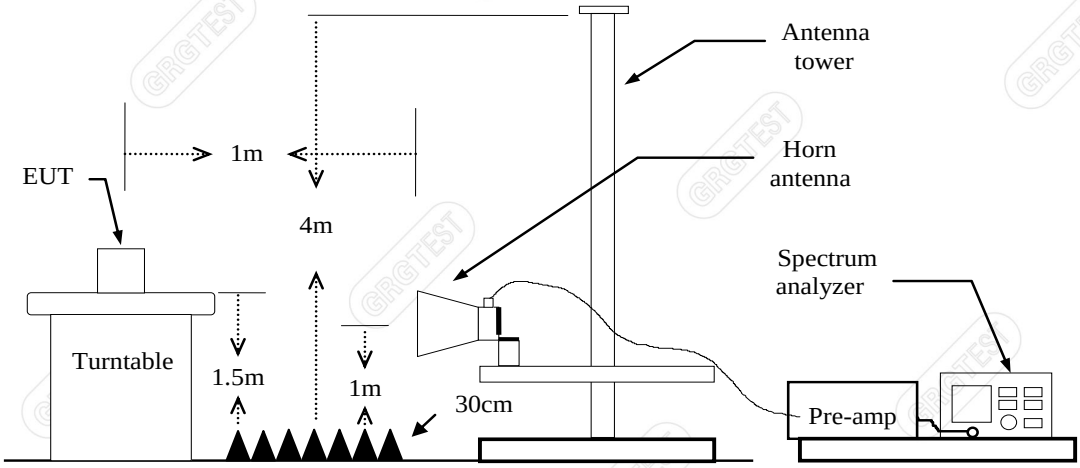

Figure 4. Above 18GHz radiated emissions test configuration

——Blank space below this page——

12.4 DATA SAMPLE

NO.	Freq. [MHz]	Reading [dBm]	Level [dBm]	Limit [dBm]	Margin [dB]	Factor [dB]	Detector	Polarity
x	xxxx	-66.69	-77.73	-25.00	52.73	-11.04	RMS	Horizontal

Frequency (MHz) = Emission frequency in MHz

Ant.Pol. (H/V) = Antenna polarization

Reading (dBm) = Uncorrected Analyzer / Receiver reading

Result (dBm) = Reading (dBm) + Correction Factor (dBm)

Limit (dBm) = Limit stated in standard

Margin (dB) = Remark Result (dBm) – Limit (dBm)

Peak = Peak Reading

RMS = RMS Reading

AVG = Average Reading

12.5 TEST RESULTS

Please refer to ANNEX H of the E202409184352-2 document for this test data.

——Blank space below this page——

13. TEST PHOTO

Please refer to the attached document E202409184352-test setup photo.

——Blank space below this page——

14. PHOTOGRAPH OF THE EUT

Please refer to the attached document E202409184352-EUT photo.

---------- End of Report ----------