MP_PS User Manual

Remote Unit

Model No: PS-R22208

CROSSFIRE

MP_PS

MID POWER

Digital Radios
37dBm per Band

Revision History

Revision Number	Revision Date	Summary of Changes	Author
1.0.0	28th June 2020	Draft	WANG XIAN

Copyright © 2020 Sunwave All rights reserved.

No part of this publication may be reproduced, transmitted, transcribed, stored in a retrieval system, or translated into any language, in any form or by any means, electronic, mechanical, photocopying, recording, or otherwise, without prior written permission from Sunwave.

All copyright, confidential information, patents, design rights, and all other intellectual property rights of whatsoever nature contained herein are and shall remain the sole and exclusive property of Sunwave. The information furnished herein is believed to be accurate and reliable.
However, no responsibility is assumed by Sunwave for its use or any infringements of patents or other rights of third parties resulting from its use.

The Sunwave and CrossFire names and logos are trademarks or registered trademarks of Sunwave.
All other trademarks are the property of their respective owners.

Content

Preface 5
Warnings 5
Site Considerations 6
Environmental Considerations 6
Warning Marks 7
Installation Preparation 8
Unpacking and Inspecting 8
Inspecting the Packing Container 8
Unpacking the Device 8
Verifying the Contents 9
Inspecting the Device 9
Installation Preparation 9
Site Investigation 9
Installation Tools 10
Torque Settings 10
Clearance 10
Installing the Access Unit (AU) 11
Accessories List 12
Rack Installation 12
Wall Installation 18
AU Mounting Dimension Spacing 21
RF Connection 22
Installing the Remote Unit (MP_PS) 23
MP_PS Accessories 23
Wall Installation (Back on the Wall) 24
Wall Installation (Side on the Wall) 31
MP_PS Wall Mounting Dimension Spacing 37
Pole Installation 38
Rack Installation 39
MP_PS Wall Mounting Dimension Spacing 44
Optical Connection 45

Optical Transceiver Module 45
Single Port Bidirectional SFP Transceiver 45
Dual Port SFP Transceiver 45
Optical Indicator 46

Preface

Warnings

⚠ All the following “Safety Precautions” must be observed during the entire installation and operation of the CrossFire system.

The CrossFire system components are designed for maximum safety and reliability when they are installed, used, and maintained by trained and qualified technicians following the procedures and instructions contained in this manual. To assure the safe operation of your system, always follow the safety and operational recommendations in this manual.

- MP_PS is not a consumer product. Please install and use MP_PS in accordance with the instructions.
- Before installing or modifying any MP_PS equipment, read and fully understand the entire instructions in this guide.
- Only qualified personnel are authorized to install and maintain the MP_PS.
- Changes or modifications to the MP_PS equipment not expressly approved by the manufacturer could void the product warranty and the user’s authority to operate the equipment.
- Follow Electro Static Discharge precautions to avoid any damage to PCB, PSU, etc.
- Keep equipment powered-off during installing or modifying.
- Low path loss cables connected to antennas are highly recommended.
- This is NOT a CONSUMER device. It is designed for installation by FCC LICENSEES and QUALIFIED INSTALLERS. You MUST have an FCC LICENSE or express consent of an FCC License to operate this device. Unauthorized use may result in significant forfeiture penalties, including penalties in excess of $100,000 for each continuing violation.
- This is NOT a CONSUMER device. It is designed for installation by an installer approved by an ISED licensee. You MUST have an ISED LICENCE or the express consent of an ISED licensee to operate this device.
- Il ne s'agit PAS d'un dispositif CONSOMMATEUR. Il est conçu pour être installé par un installateur agréé par un titulaire de licence ISED. Vous devez avoir un LICENCE ISED ou le consentement exprès d'un titulaire de licence de l'ISED pour l'utilisation de cet appareil.
- To comply with FCC/IC RF exposure compliance requirements, each individual antenna used for this transmitter must be installed to provide a separation distance greater than 72cm or more from all persons during normal operation and must not be co-located with any other antenna for meeting RF exposure requirements.
- Pour se conformer aux exigences FCC/IC en matière d’exposition RF, chaque antenne utilisée pour cet émetteur doit être installée pour assurer une distance de séparation supérieure ou supérieure à 72 cm de toutes les personnes pendant le fonctionnement normal et ne doit pas être co-localisée avec une autre antenne pour satisfaire aux exigences d’exposition RF.
- Antenna gain should not exceed 0 dBi.
- Le gain d’antenne ne doit pas dépasser 0 dBi

Note: This device complies with Part 15 of the FCC Rules. Operation is subject to the following two conditions: (1) this device may not cause harmful interference, and (2) this device must accept any interference received, including interference that may cause undesired operation.

NOTE: This equipment has been tested and found to comply with the limits for a Class A digital device, pursuant to Part 15 of the FCC Rules. These limits are designed to provide reasonable protection against harmful interference in a residential installation.

This equipment generates uses and can radiate radio frequency energy and, if not installed and used in accordance with the instructions, may cause harmful interference to radio communications. However, there is no guarantee that interference will not occur in a particular installation.

If this equipment does cause harmful interference to radio or television reception, which can be determined by turning the equipment off and on, the user is encouraged to try to correct the interference by one or more of the following measures:

-- Reorient or relocate the receiving antenna.

-- Increase the separation between the equipment and receiver.

-- Connect the equipment into an outlet on a circuit different from that to which the receiver is connected.

-- Consult the dealer or an experienced radio/TV technician for help.

Note: Only authorized person can enter the area where the antenna is installed. And the person is fully aware of the potential for exposure and can exercise control over his or her exposure by leaving the area or by some other appropriate means. Awareness of the potential for RF exposure in a workplace or similar environment can be provided through specific training as part of a RF safety program

NOTE: This device complies with Industry Canada license-exempt RSS standard(s). Operation is subject to the following two conditions: (1) this device may not cause interference, and (2) this device must accept any interference, including interference that may cause undesired operation of the device.

Le présent appareil est conforme aux CNR d'Industrie Canada applicables aux appareils radio exempts de licence. L'exploitation est autorisée aux deux conditions suivantes : (1) l'appareil ne doit pas produire de brouillage, et (2) l'utilisateur de l'appareil doit accepter tout brouillage radioélectrique subi, même si le brouillage est susceptible d'en compromettre le fonctionnement.

Site Considerations

1. The system delay should be taken into consideration when there are neighboring BTS sites overlapping in coverage. Normal use of the system will not damage the base station; however, with the increase of RU during network coverage for indoor distribution, the uplink output noise level may affect the sensitivity of the base station, which should be considered during engineering design. Pick an ideal easy-to-reach location for installation convenience.
2. Pick an ideal easy-to-reach location for installation convenience.
3. Verify that there is a minimum of a 50cm radius of space around CrossFire equipment for the convenience of maintenance and on-site inspection.
4. Install CrossFire close to the service area for monitor and debugging.

Environmental Considerations

Humidity and temperature can adversely effort the reliability of the CrossFire system. Therefore, it is highly recommended to install the equipment in locations with stable humidity, temperature and ventilating.

The equipment has to operate at humidity level and temperature range as follow:

- ✧ Maximum humidity: 85%
- ✧ AU Operating Temperature range: -10°C to +50°C
- ✧ MP-PS Operating Temperature range: -40°C to +50°C
- ✧ Storage Temperature range: -40°C to +70°C

Warning Marks

The warning marks on the CrossFire shell should be kept clean, readable, and identifiable.

ALWAYS disconnect all lines and power connections before servicing or disassembling this equipment.

NEVER touch the surface after power on the devices.

For performance and safety reasons, **NEVER** disassemble and remodel the devices.

Installation Preparation

Unpacking and Inspecting

This section discusses the procedures for receiving the shipment, inspecting the packing container, unpacking, and inspecting the device.

Inspecting the Packing Container

Handle the packing container carefully. Inspect the packing container immediately on arrival at the installation site to verify that no apparent damage occurred during shipment. Ensure that the container is sound and that the waterproof and vibration warning notices are still visible. If possible, always inspect the equipment in the presence of the delivery person.

If any damage is observed:

1. Do not open or unpack the container.
2. Immediately contact the transportation carrier and notify them of the damage.
3. File a claim with the carrier once you determine the extent of any damage.
4. Return it to SUNWAVE's nearest RMA facility and contact SUNWAVE for RMA processing.

Unpacking the Device

If the container appears to be in satisfactory condition:

1. Ensure both user and supplier representatives are in attendance during shipment inspection.
2. Confirm where you will store the device.
3. Ensure procedures are in place to handle the device and other equipment properly.
4. Ensure the following tools are available to unpack the shipment: hammer, paper cutter, and crowbar.
5. Open the packing container carefully. The device is contained in a protective package inside the packing container; however, caution is still necessary so as not to damage the internal package and device.
6. Remove the internal package from the packing container.
7. Unpack the device from the internal package carefully.

Verifying the Contents

To verify the contents of the package:

1. Verify that the contents and quantities agree with the Delivery Packing List.
2. Check the device model against the Delivery Packing List.
3. Notify SUNWAVE immediately if any discrepancies are discovered, to verify whether the complete and correct shipment has been received.

Inspecting the Device

After unpacking the device, place the device on solid ground and check the following to ensure the device has not been damaged:

1. Inspect the device's appearance, overall dimensions, and weight.
2. Check that the device has not been deformed or bent in any way.
3. Check that there are no warps, scratches, bubbles, or dirt marks.
4. Check that there are no loose, missing or incorrectly fastened screws.
5. Check that the installation slots in the cabinet sub-rack are rectangular.
6. Ensure that the guide bar has not been damaged and the fittings and auxiliary parts are intact.
7. Check that the silk-screened images on the device are visible and intact.

Installation Preparation

Site Investigation

Before installation, the installer should contact the project director to ensure that the site is suitable for installation. Details required include information about the installation site such as whether there is an iron tower or high mast nearby, the surrounding environmental conditions such as temperature and humidity, the power source, and so on. Installation staff should complete a site investigation with the project director before construction and conduct field observation of the installation site and the coverage area of the device, to confirm factors such as signal intensity, signal quality, the required coverage range, device location, antenna-feeder system, and power supply system.

Note: Only maintenance personnel or users who understand the reason for access and are experienced with restricted area access and understand the necessary preventive measures should access the installation site.

Installation Tools

The following equipment and tools are required for a successful installation:

Electric percussion drill / Screwdriver / Wrench

Torque Settings

Type	M3	M6	M10
Specified Torques	0.6Nm	5Nm	50Nm

Clearance

You must ensure the following mounting clearances for mounting within a 19” rack/cabinet:

✧ Convection cooling:

Maintain 3U clearance between the bottom of the device and any other.

Maintain 3U clearance from the top surface of the device to the top of the rack.

✧ FAN Cooling:

You can mount the fan between the bottom of the device and any other.

Maintain 2U clearance between the bottom of the device and any other.

Installing the Access Unit (AU)

Accessories List

① Screw M6*16	② Screw M3*6
③ Suspension Loop	④ AC Power Lead 2.5m
⑤ CAT-5Cable 1.5m	⑥ Ground Wire 2m

Rack Installation

The Access Unit is a 19” 1U equipment shelf. When installing the Access Unit in a rack, make sure the mechanical loading of the rack is even to avoid a hazardous condition. The rack should safely support the combined weight of all the equipment and be securely anchored. Installing the Access Unit in a climate-controlled room with sufficient air circulation is recommended as the maximum ambient temperature is +50°C.

To install the Access Unit in the equipment rack.

1. Attach the 19" mounting brackets at the front of the AU, using 4 screws M3×6 per bracket and the Phillips screwdriver. Observe the orientation of the brackets.

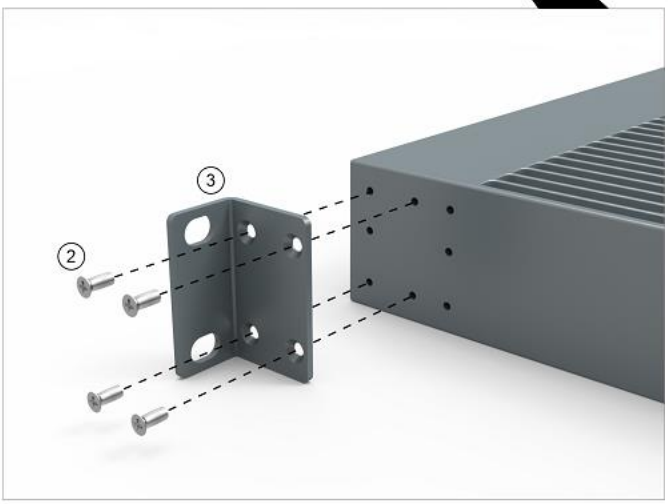

Install the hangers in AU-PS.

2. Recommended attaching the sliding rails to rack. (Not included in delivery).

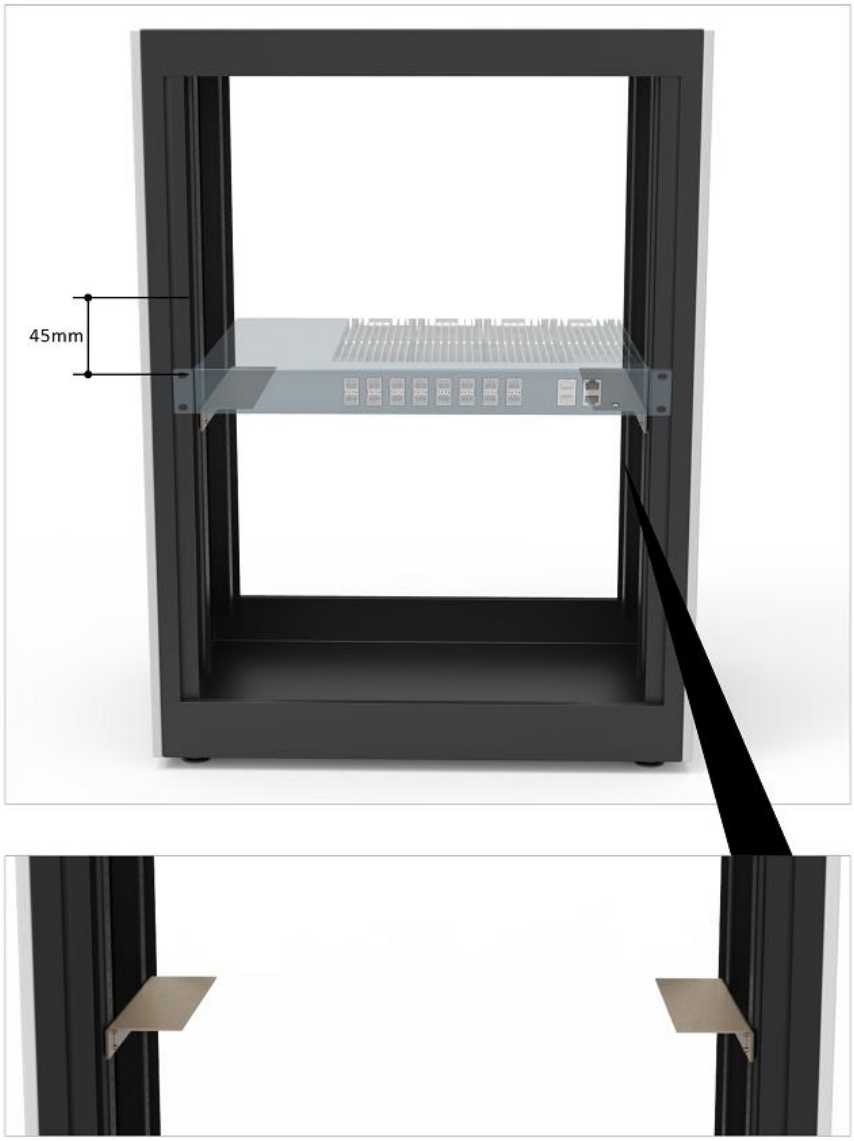

- Choose an indoor location larger than 1000×800×2500mm and it is recommended that the rack is at least 200mm away from the wall.
- It is recommended that have plates installed for weight supporting.

3. Place the AU in the rack and secure the AU using 2 screws M6×16 on both sides and the Phillips screwdriver.

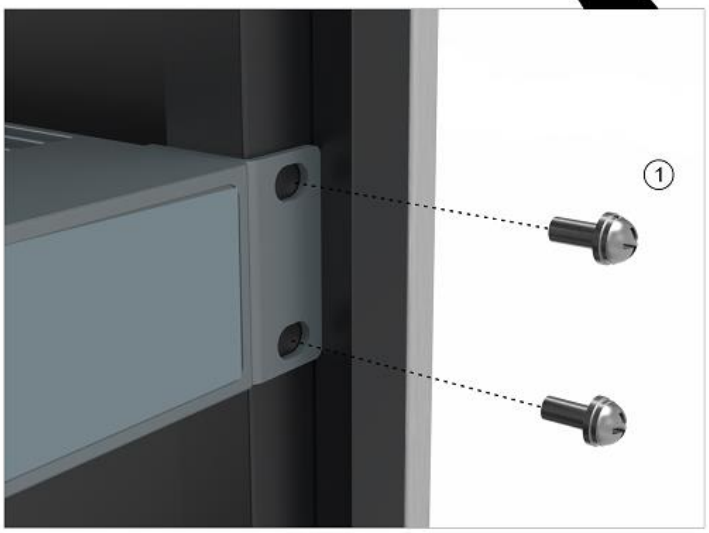

Install the AU-PS into the 19" rack and fasten with 4×M6 screws.

4. Install the fan for cooling if multiple AUs are installed in the same rack.

⚠ It is necessary to allow at least 3 rack units (132mm) of free space below each unit for heat dissipation without fan installed or 1 rack unit (44mm) of free space below each unit with fan occupied in the middle.

Otherwise, the device temperature may rise and affect the service life of the device.

5. Connect and lock the power cable at the AU rear side.

6. Connect and screw the ground wire at the AU rear side.

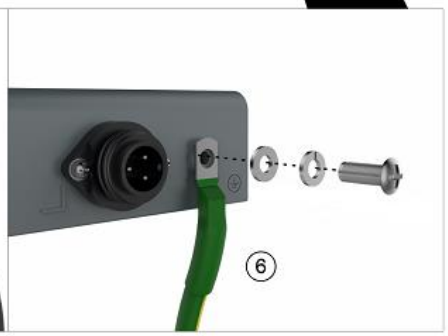

· Connect and tighten the power cable to AU-PS.

· Connect and screw the ground wire to AU-PS.

Wall Installation

To install the Access Unit on the wall:

1. Rotate the handles 90°and attach them at the rear of the AU, using 4 screws M3×6 per bracket and the Phillips screwdriver. Observe the orientation of the brackets.

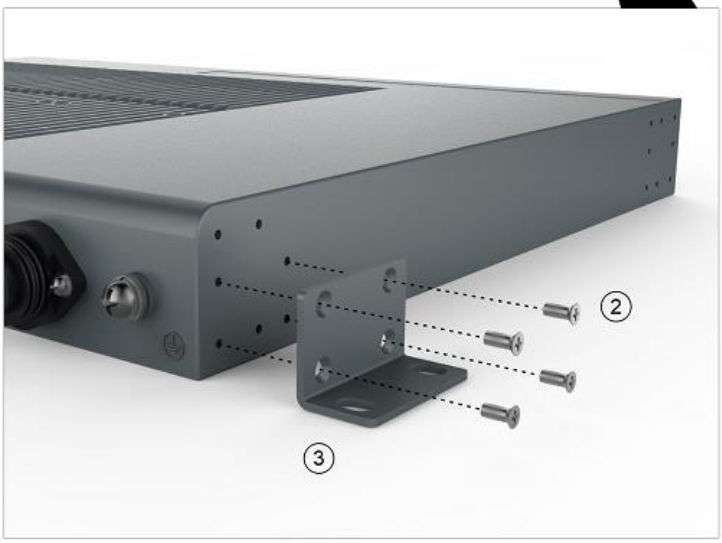

Rotate the hanger 90° and install in AU-PS.

2. Mark 4 x ∅6.8mm drilling holes sites for the hanger to be attached to the wall.

3. Drill 4 holes at the marked sites using percussion drill and embed 4×∅10 plastic expansion pipes. Note: H=70mm.

   Fasten the case with 4×M6 expansion bolt.

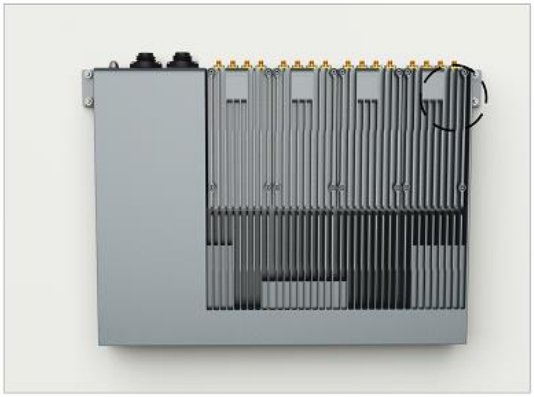

· Choose an appropriate indoor location.

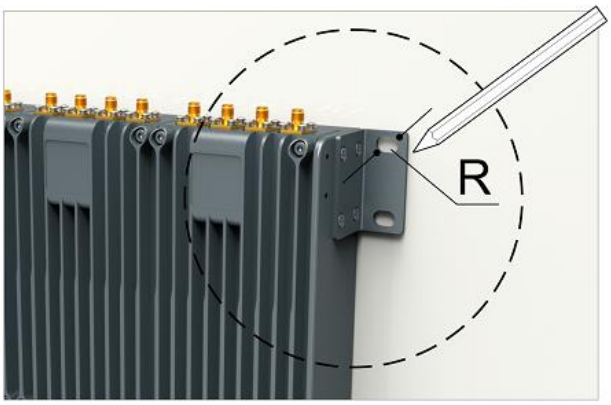

· Mark 4×∅6.8 holes sites for the hanger to be attached to the wall.

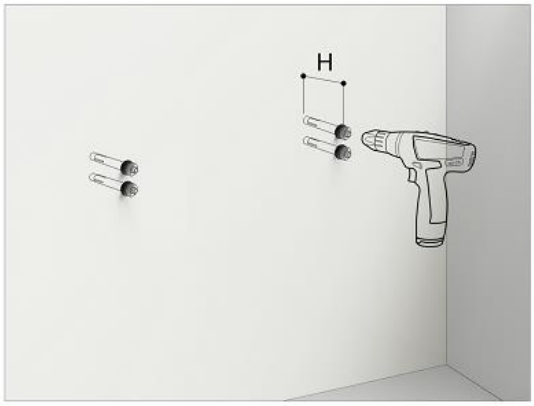

· Drill at the four sites using a percussion drill and embed 4×∅8 plastic expansion pipes.

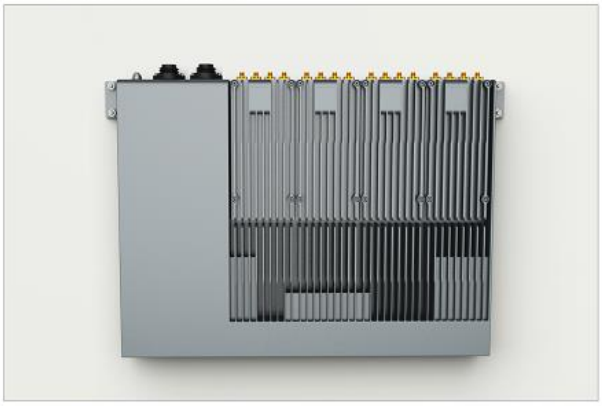

· Fasten the case with 4×ST4.5 self-tapping screws.

Pen	Drill	Expansion Bolt
		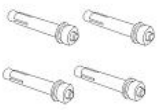

4. Connect and lock the power cable at the AU rear side
5. Connect and screw the ground wire at the AU rear side

- Connect and tighten the power cable to AU-PS.
- Connect and screw the ground wire to AU-PS.

AU Mounting Dimension Spacing

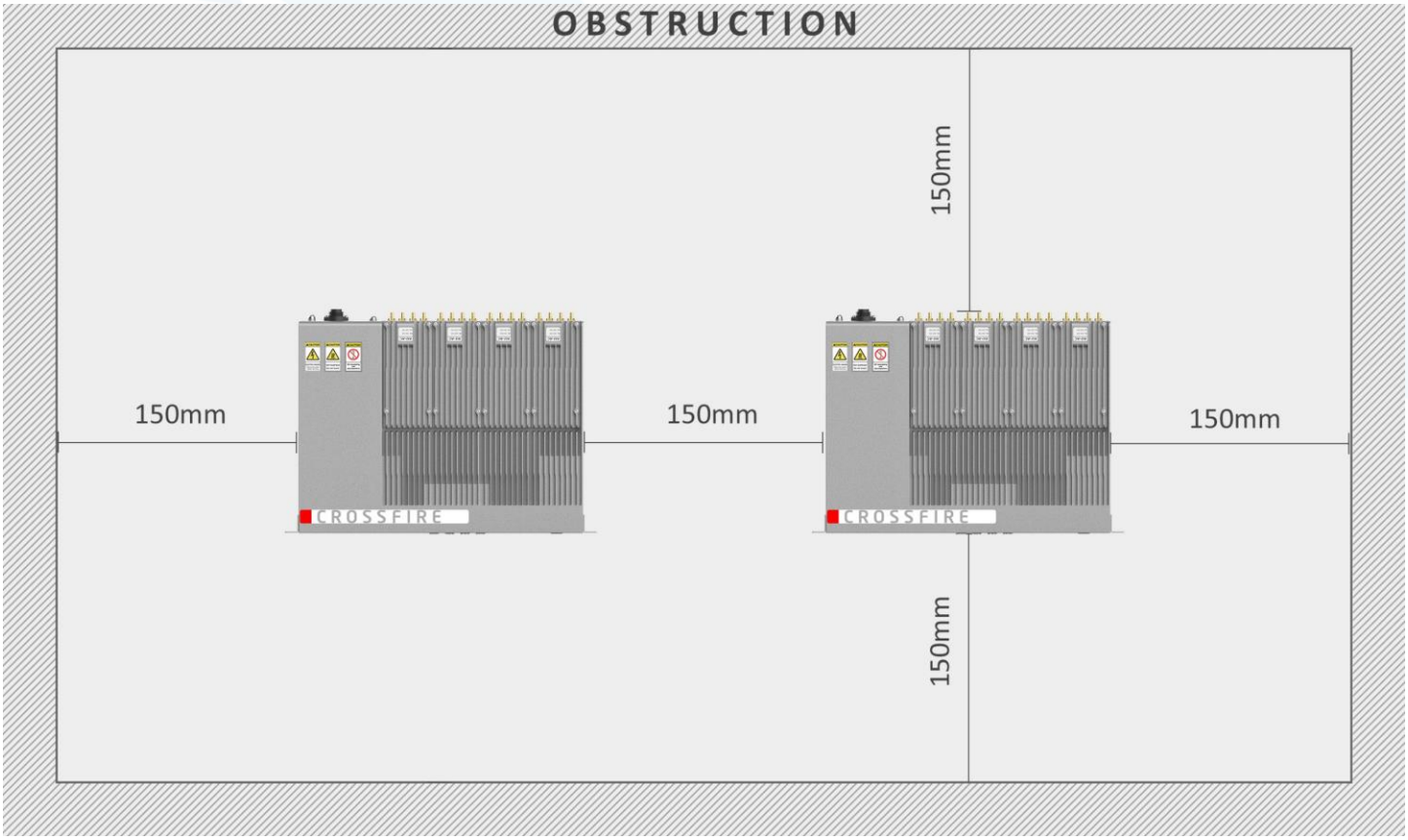

Contact us today:
www.sunwave.com
cf_support@sunwave.com

RF Connection

The RF interface between the Access Unit and the service provider signal source (or CrossFire CPOI) is provided by duplex connections on the Active Combiner module.

To route and connect the coaxial cables to the Access Unit:

1. Obtain the required lengths of high performance, flexible, low loss 50Ω coaxial cable for all coaxial connections and route the cables from the signal source or CPOI to the Active Combiner module.
2. Connect the cables from the signal source to the QMA female connectors on the Active Combiner module on the back panel of the Access Unit.

Note: Each Active Combiner module has four connectors to support up to four inputs.

AU Rear Panel Interfaces

SN	Interface Name	Description
1	Module 4 Duplexer Interface	QMA Female
2	Module 3 Duplexer Interface	QMA Female
3	Module 2 Duplexer Interface	QMA Female
4	Module 1 Duplexer Interface	QMA Female
5	Electric Power Line Interface	/
6	Grounding	/

Installing the Remote Unit (MP_PS)

MP_PS Accessories

Wall Installation (Back on the Wall)

1. Attach and fasten the handle to the side of MP_PS with screws M6×14 using T5 Wrench.
2. Attach and fasten the Bracket I to the back of MP_PS with screws M6×14 using T5 Wrench.

Handle & Bracket Ⅰ Installation

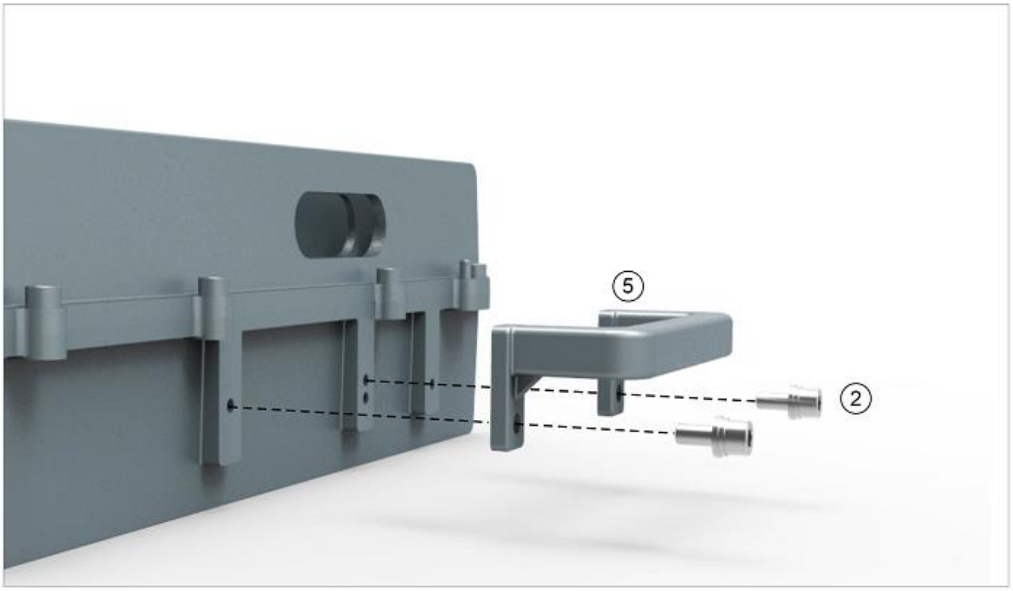

Fasten the handle to the side of MP-PS with 2×M6×14 screws.

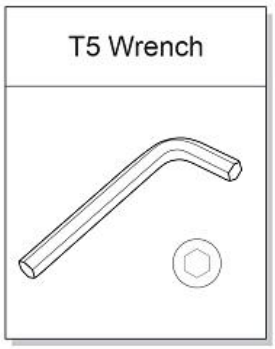

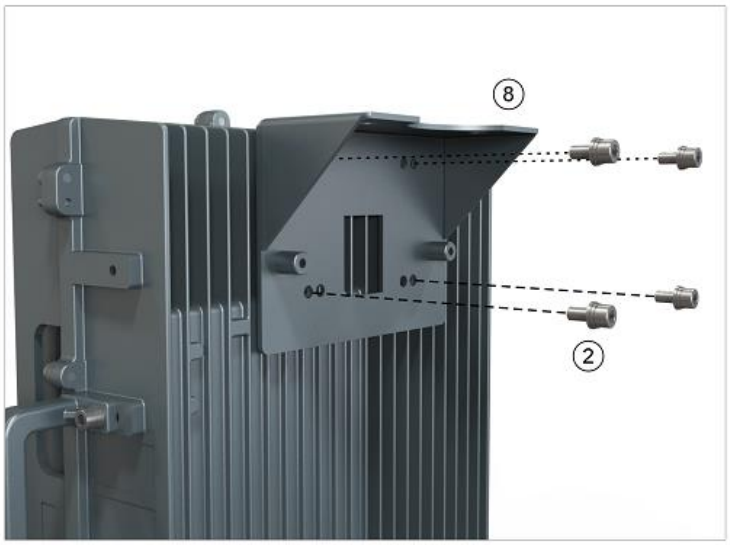

Fasten the mounting bracket Ⅰ to the back of MP-PS with 4×M16×14 screws.

3. Mark the position of the drilling holes in the mounting Bracket II. Note: R=13mm.

4. Drill 4 holes at the marked positions. Note: H=70mm

5. Attach the dowels, expansion screws or the like and fasten the Bracket II to the wall.

Tips: use Bracket II as a reference to control each devices' separation distance before hanging and locking MP_PS up.

Bracket Ⅱ Installation

R=13mm

H=70mm

- Choose an appropriate location.Mark 4×∅13 holes sites for the mounting bracket Ⅱ to be attached to the wall.
- Drill at the four sites using a percussion drill and embed 4 expansion bolt pipes.
- Fasten the mounting bracket Ⅱ to the wall with 4×M10×90 expansion bolts.

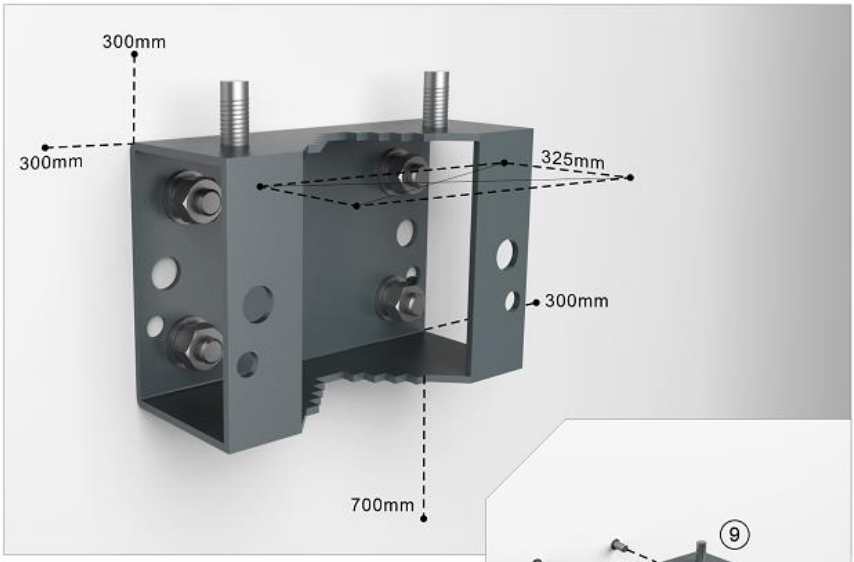

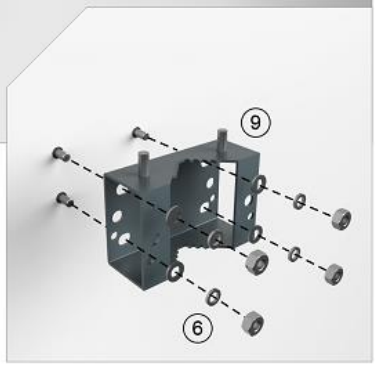

Pen	Drill	17-17 Wrench

6. Hang the MP_PS on the mounting bracket II and fasten with nuts M10.

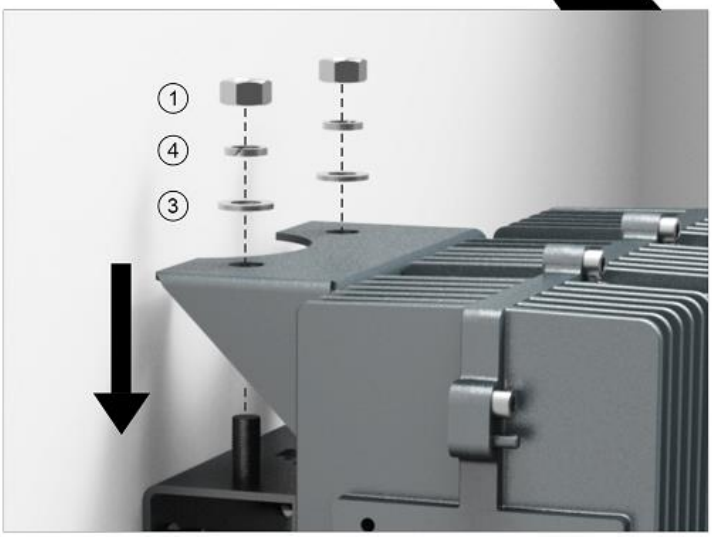

Hang the MP-PS on the mounting bracket Ⅰ and fasten with 2×M10 nuts.

7. Fasten the Bracket I and II with screws M6×14.

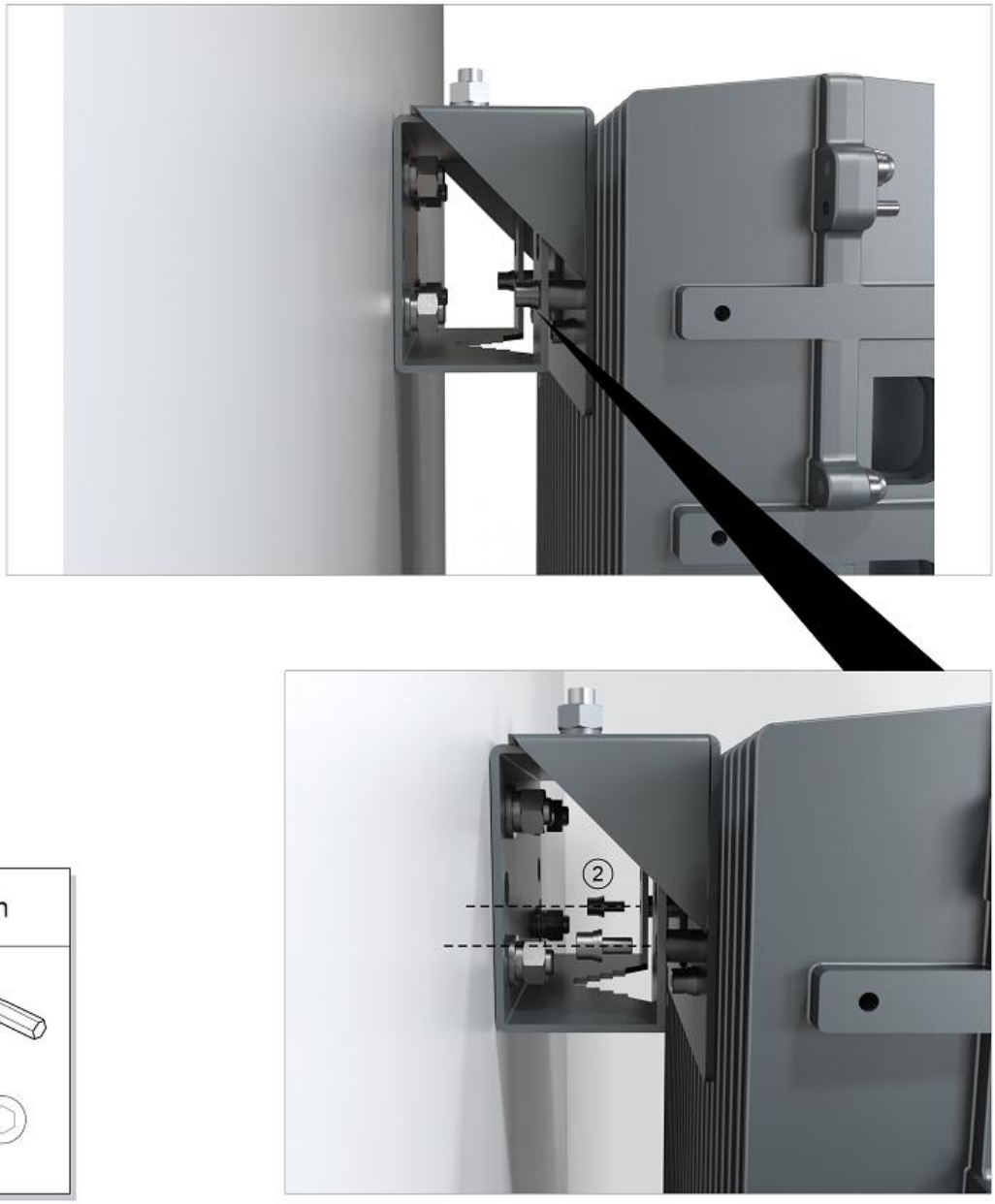

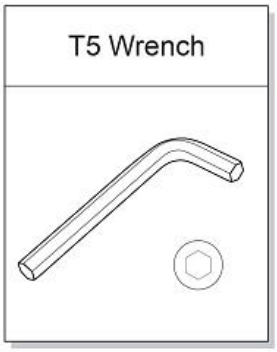

Fasten with 2×M6×14 screws.

8. Connect and lock the power cable
9. Connect and screw the ground cable

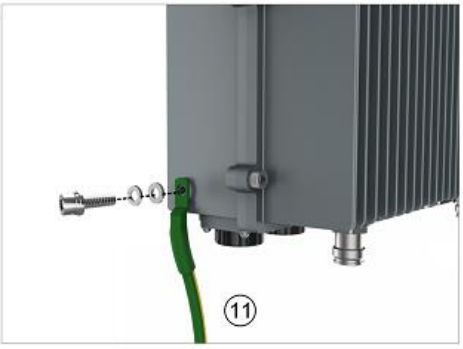

· Connect and screw the ground wire to MP-PS.

· Connect and tighten the power cable to MP-PS.

10. Connect and tighten the waterproof network cable

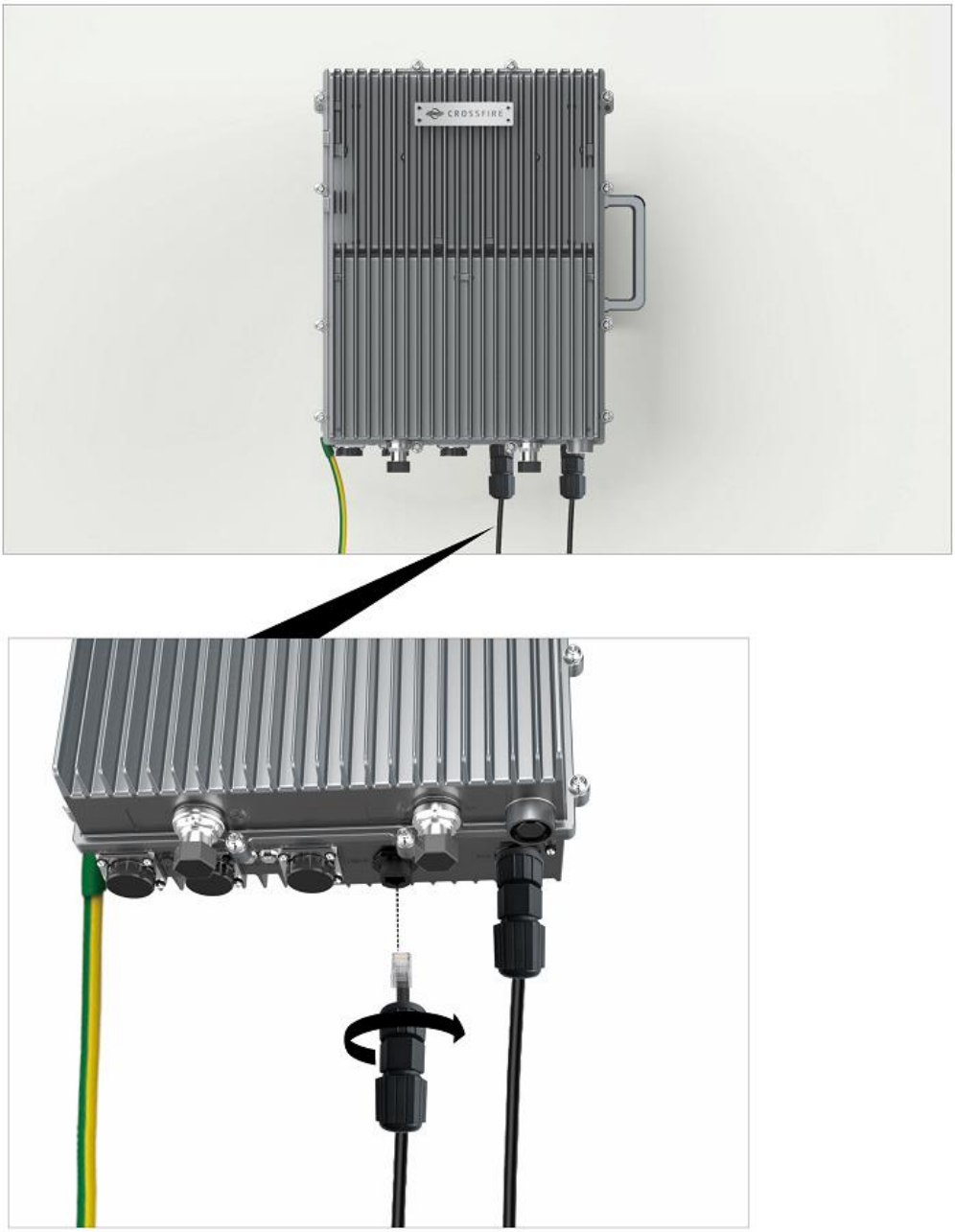

Connect and tighten the waterproof cable
(▲ *waterproof sleeve to be purchased separately)*to MP-PS.

11. Connect and tighten the waterproof optical fibre

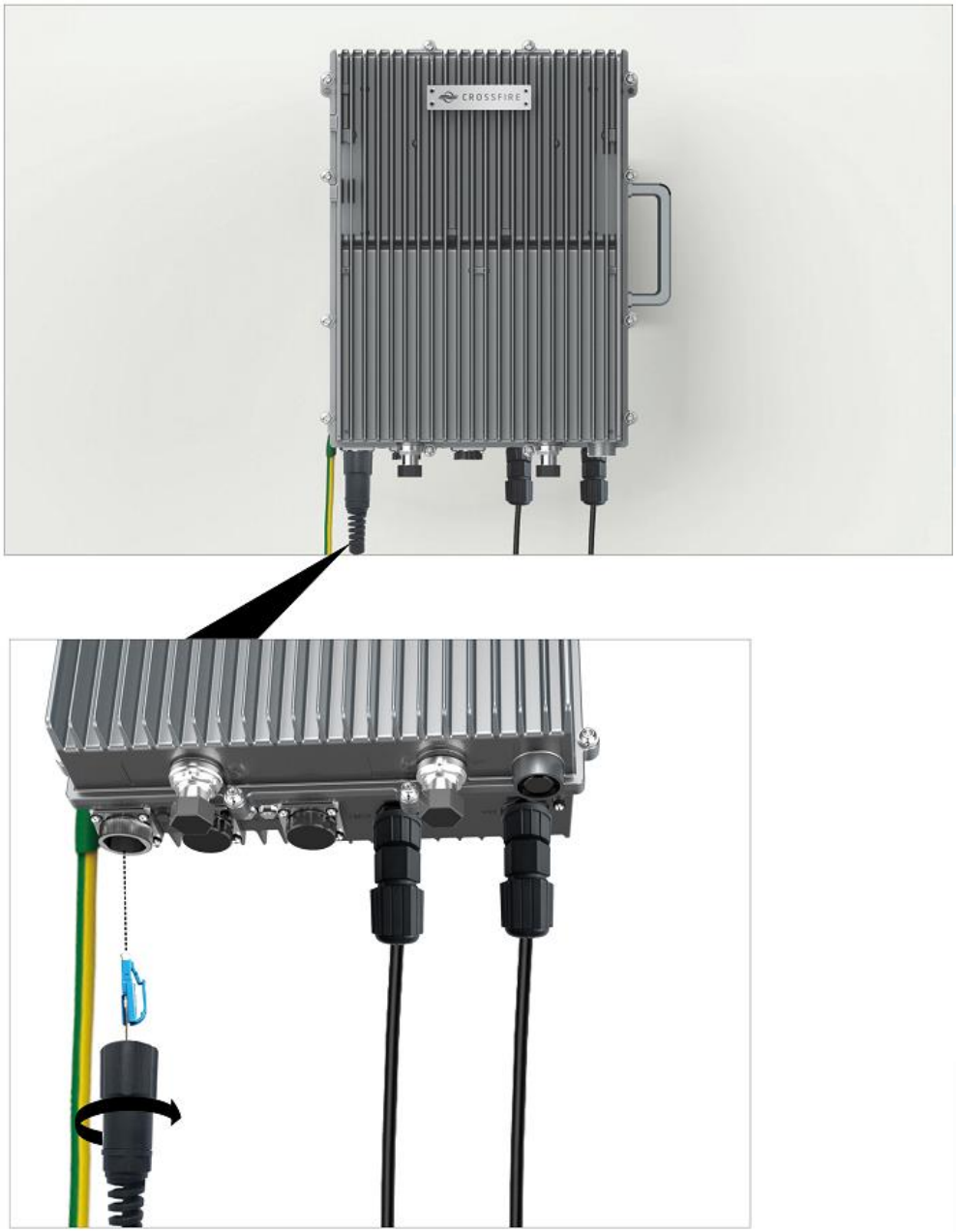

Connect and tighten the waterproof cable
(▲ *waterproof sleeve to be purchased separately)*to MP-PS.

Wall Installation (Side on the Wall)

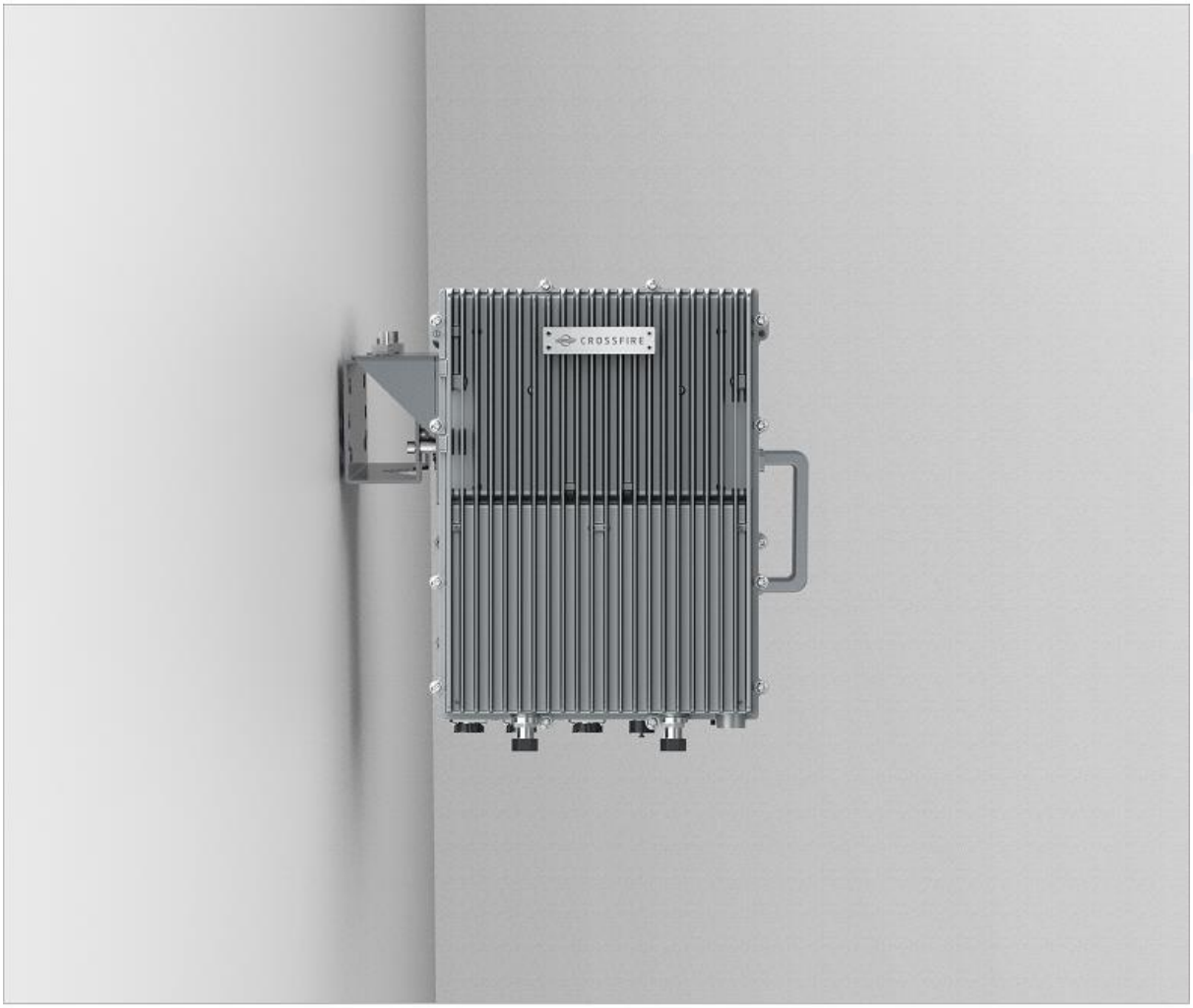

Contact us today:
www.sunwave.com
cf_support@sunwave.com

1. Attach and fasten the handle to the side of MP_PS with screws M6×14 using T5 Wrench.
2. Attach and fasten the Bracket I to the left side of MP_PS with screws M6×14 using T5 Wrench.

Handle & Bracket Ⅰ Installation

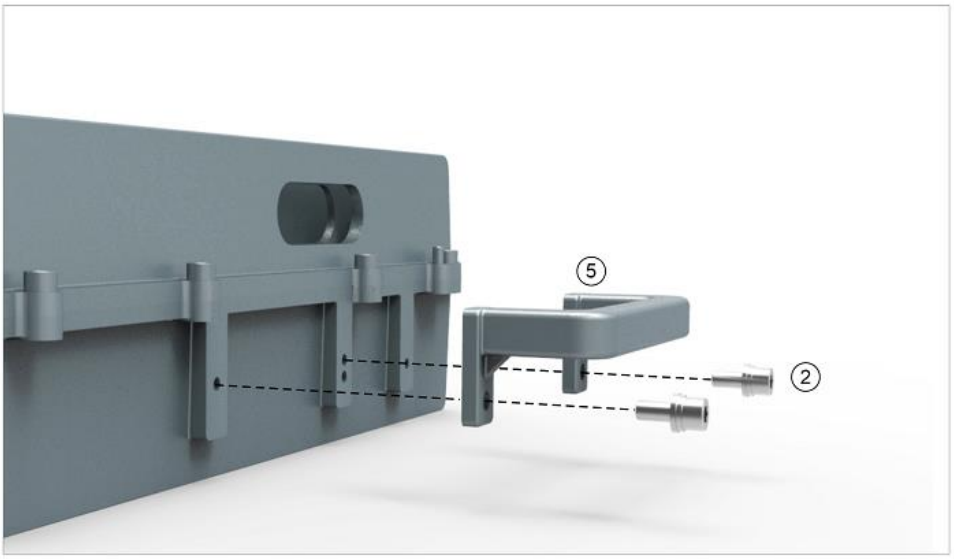

Fasten the handle to the side of MP-PS with 2×M6×14 screws.

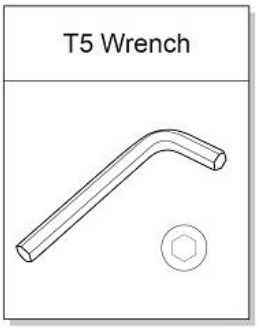

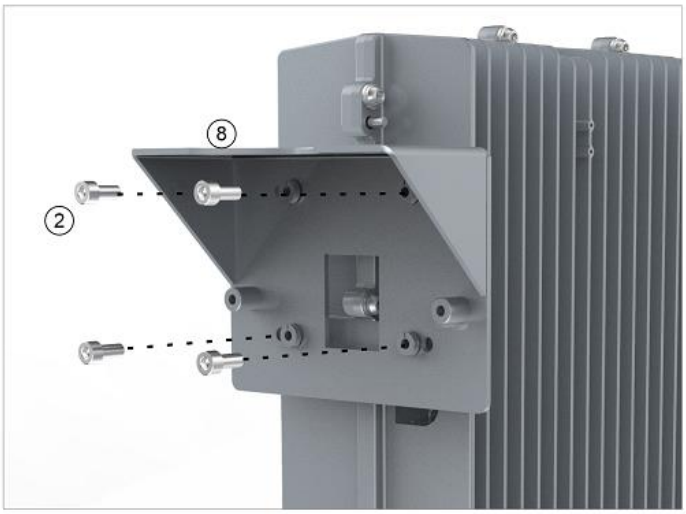

Fasten the mounting bracket Ⅰ to the back of MP-PS with 4×M16×14 screws.

3. Mark the position of the drilling holes in the mounting Bracket II. Note: R=13mm.

4. Drill 4 holes at the marked positions. Note: H=70mm.

5. Attach the dowels, expansion screws or the like and fasten the Bracket II to the wall.

Tips: use Bracket II as a reference to control each devices' separation distance before hanging and locking MP_PS up.

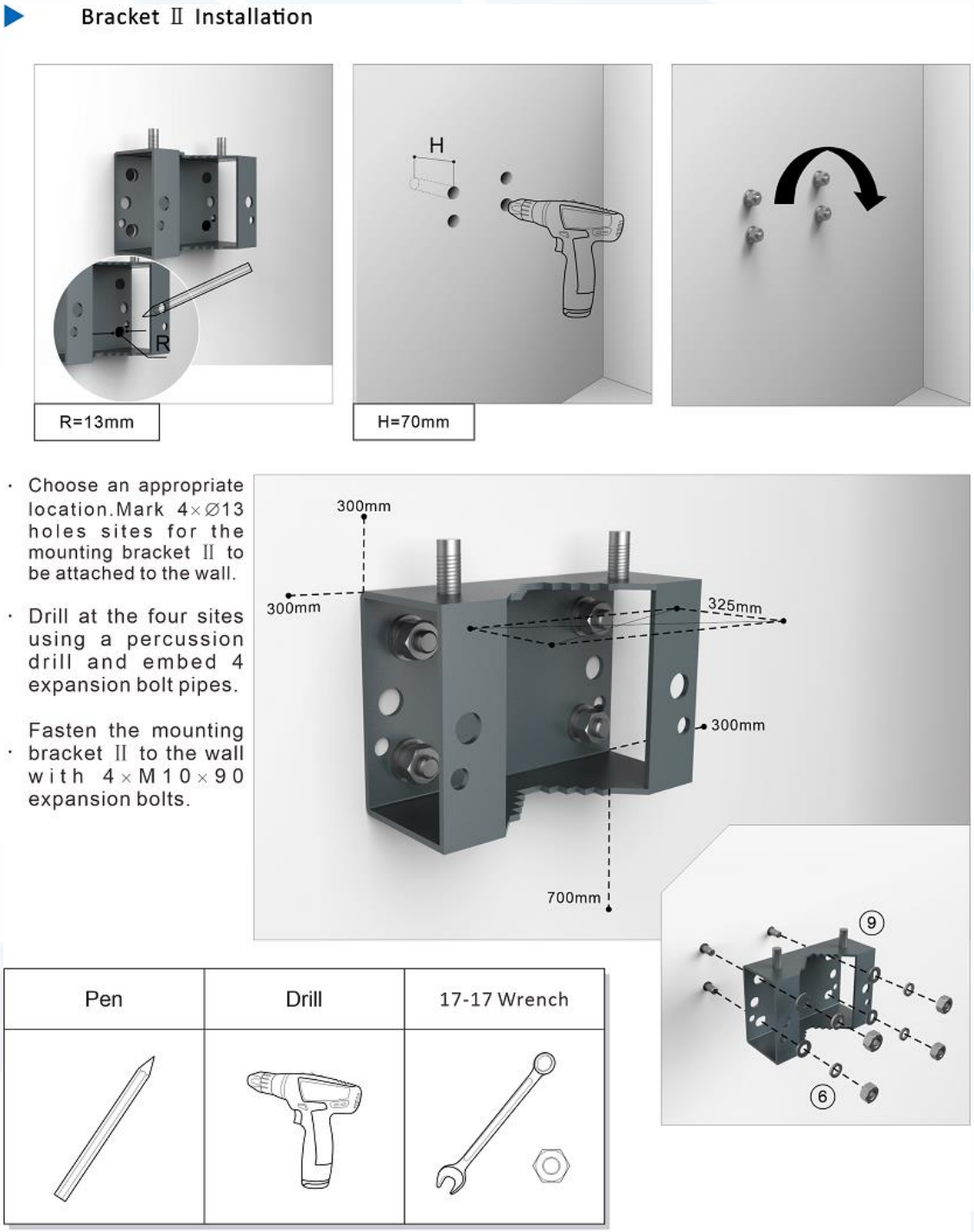

6. Hang the MP_PS on the mounting bracket II and fasten with nuts M10.

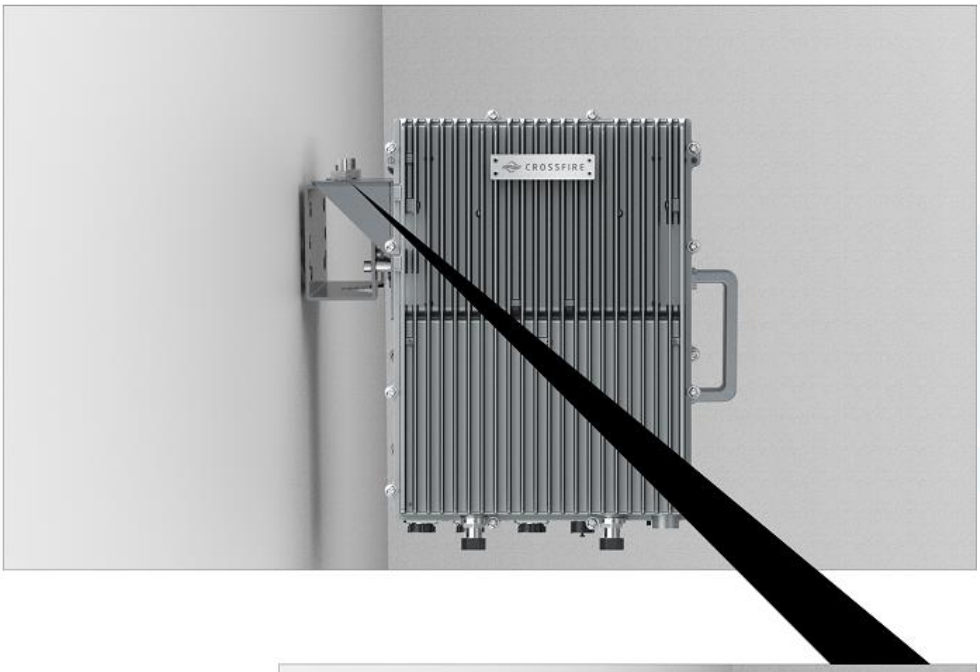

Hang the MP-PS on the mounting bracket Ⅰ and fasten with 2×M10 nuts.

7. Fasten the Bracket I and II with screws M6×14.

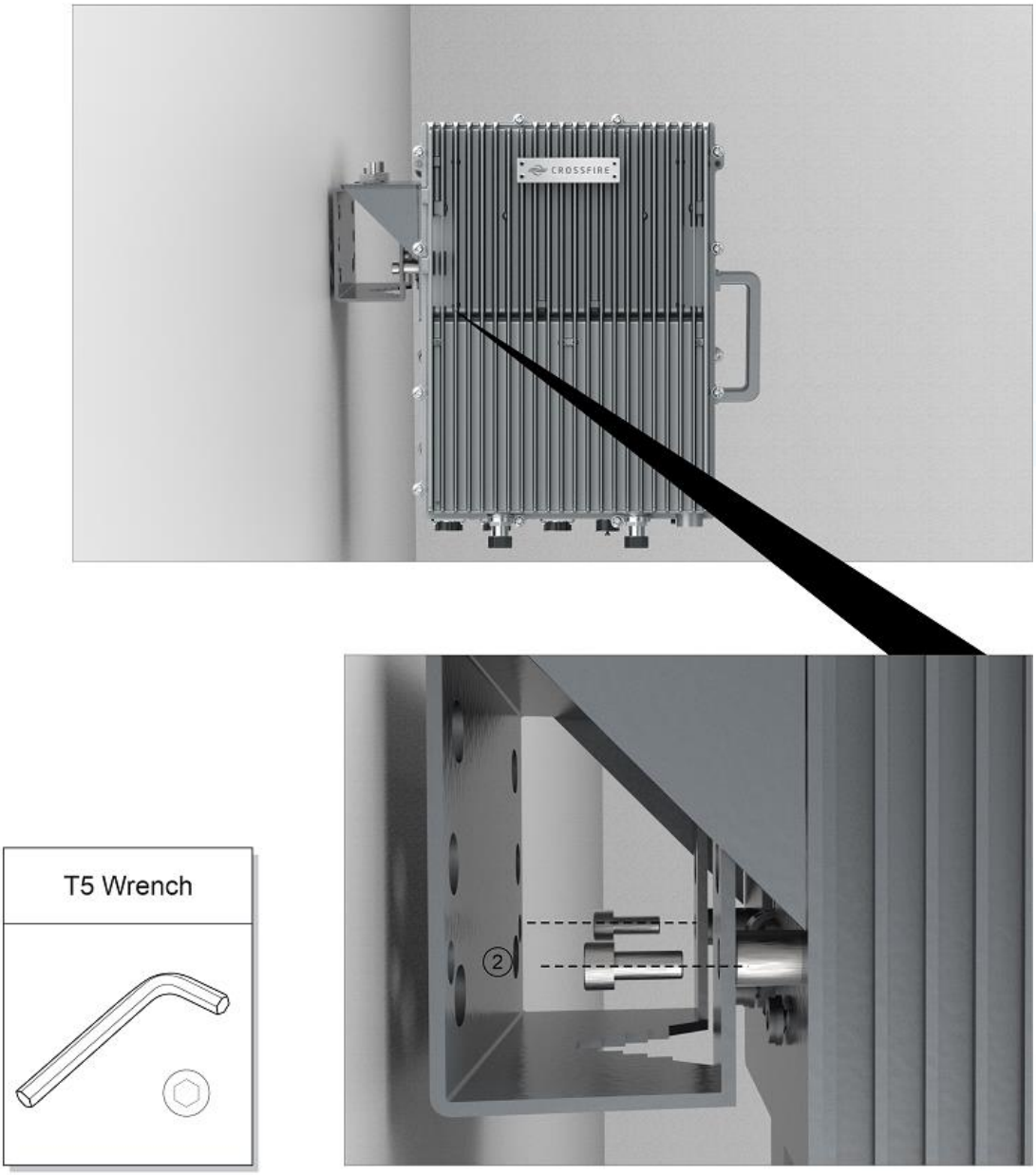

Fasten with 2×M6×14 screws.

8. Connect and lock the power cable
9. Connect and screw the ground cable

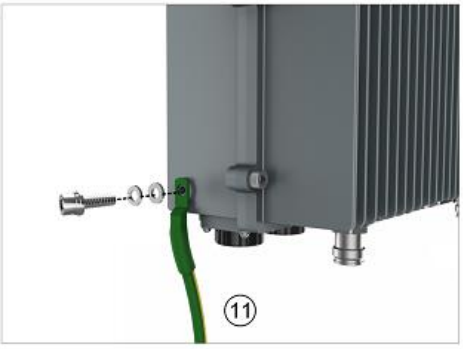

· Connect and screw the ground wire to MP-PS.

· Connect and tighten the power cable to MP-PS.

MP_PS Wall Mounting Dimension Spacing

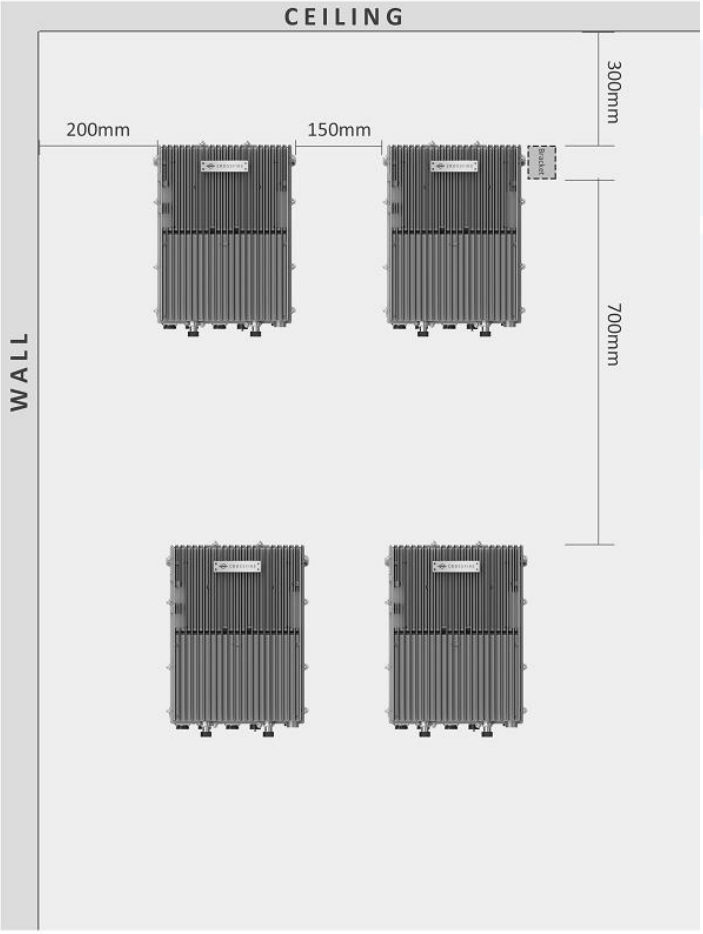

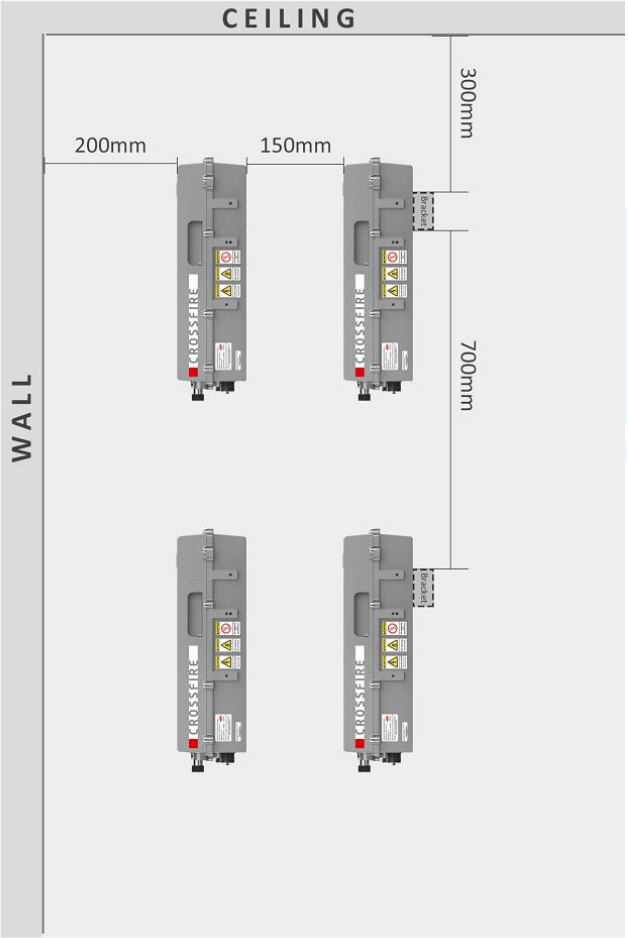

Pole Installation

1. Install the handle and Bracket I to the back of MP_PS.
2. Install the bracket II and Bracket III to the pole.
3. Hang the MP_PS on the mounting bracket and fasten with nuts M10.
4. Connect the ground cable and power cable.

Note: The diameter of Pole shall not be over 110mm or less than 55mm.

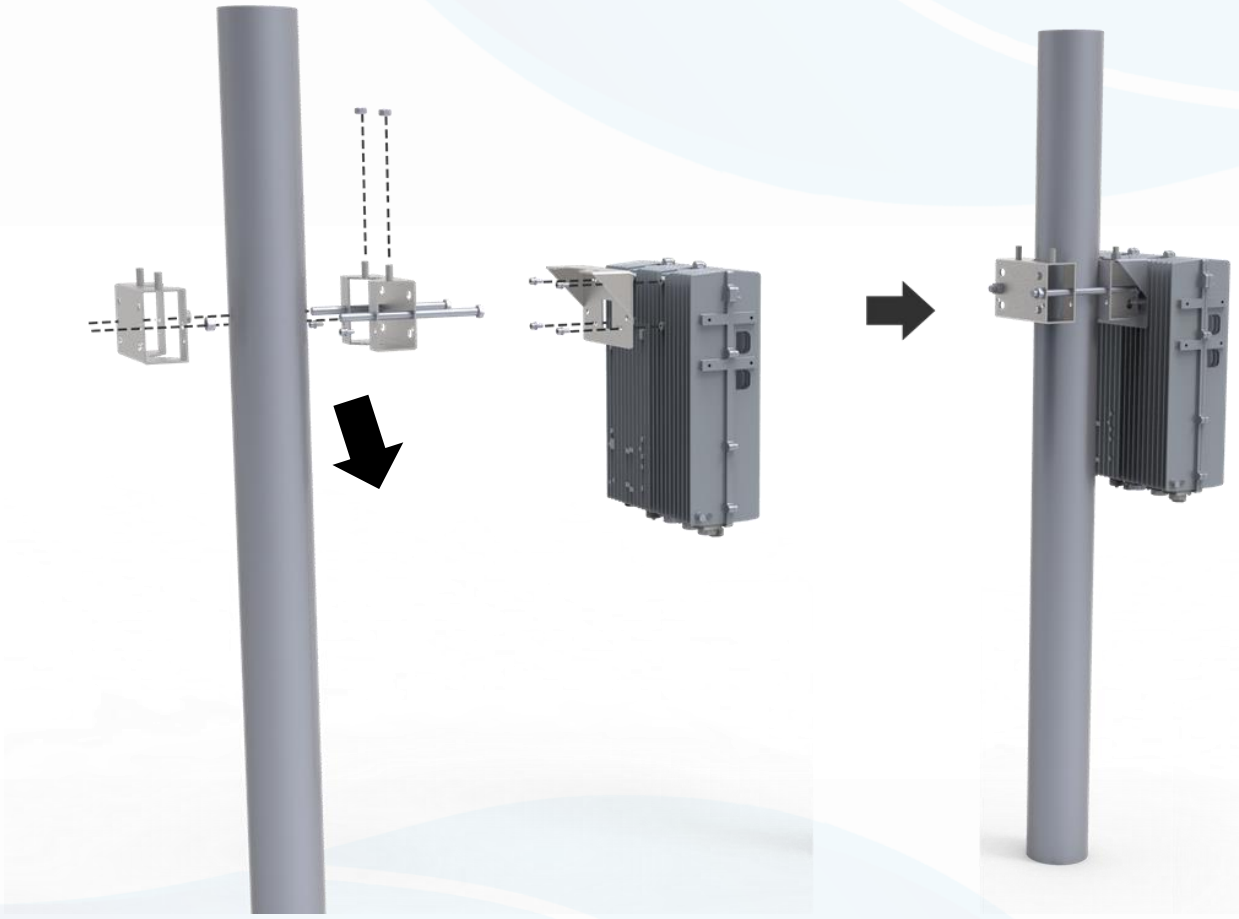

Contact us today:
www.sunwave.com
cf_support@sunwave.com

Rack Installation

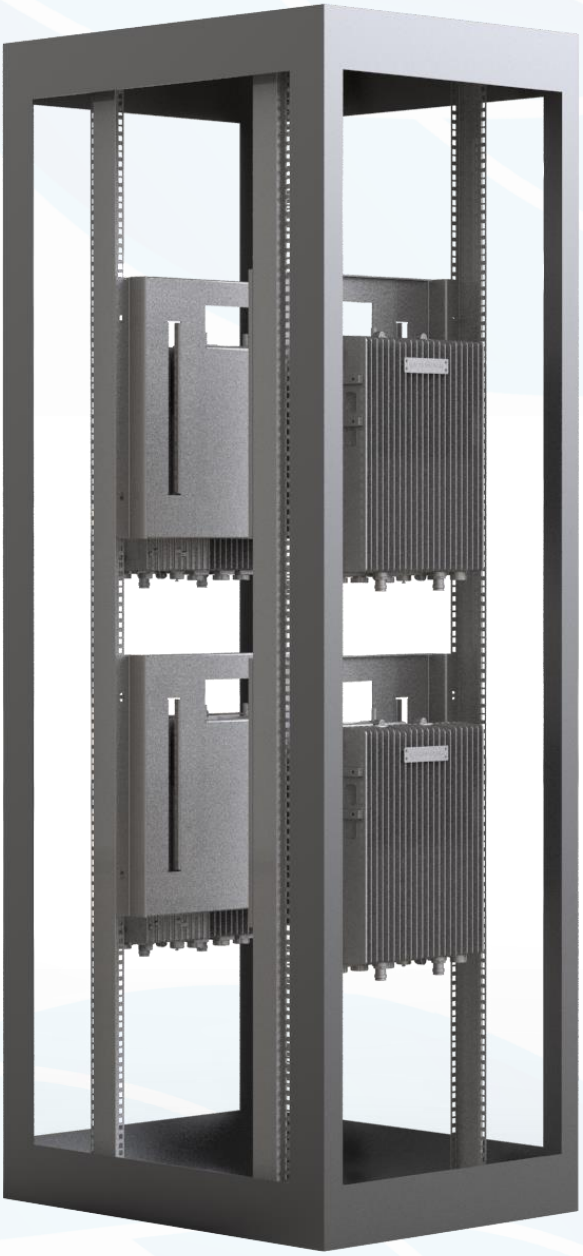

Contact us today:
www.sunwave.com
cf_support@sunwave.com

1. Attach and fasten the Bracket III to the Standard 19' Rack with screws

Note: Please purchase Bracket III for rack installation separately.

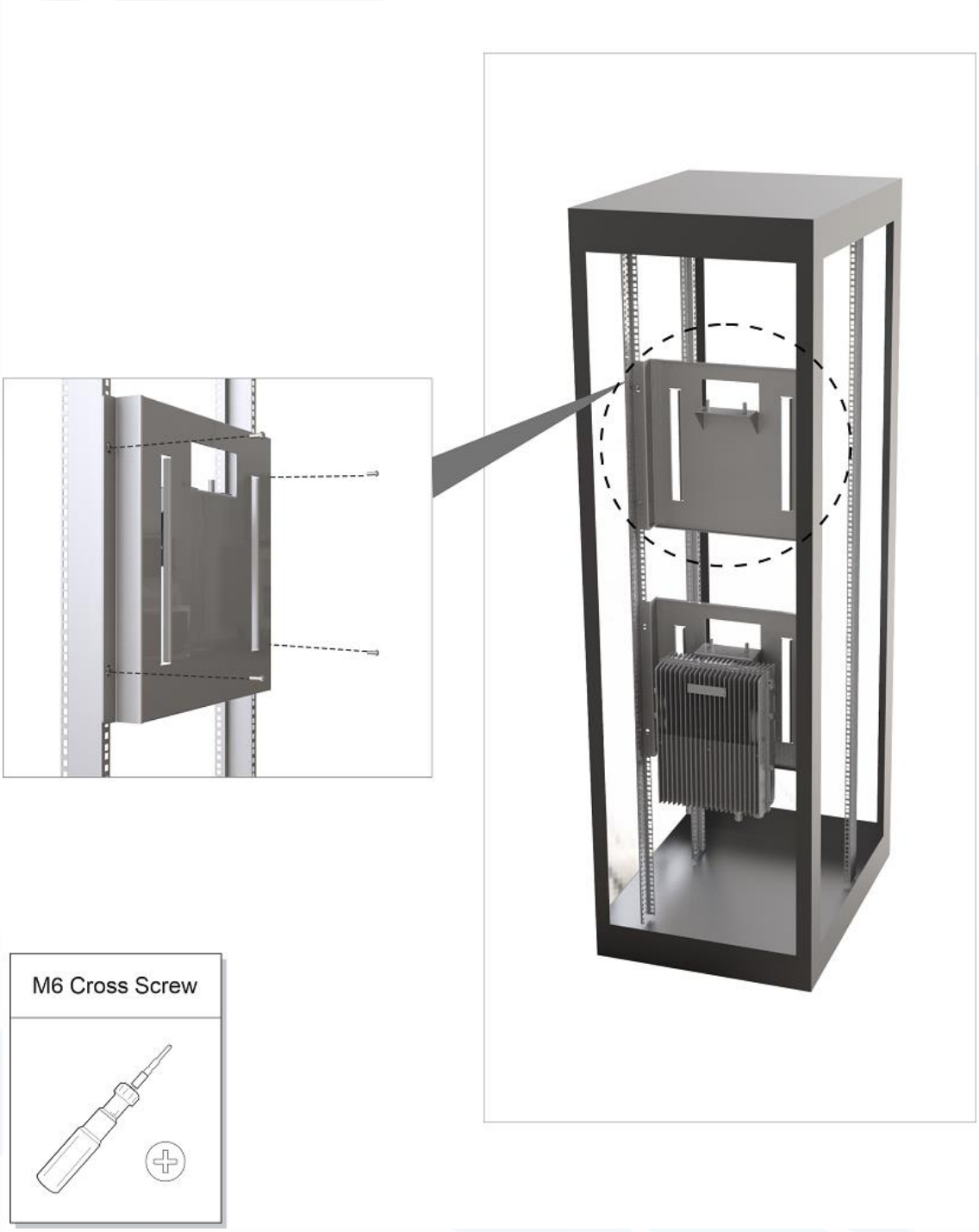

2. Attach and fasten the handle to the side of MP_PS with screws M6×14 using T5 Wrench.

3. Attach and fasten the Bracket I to the back of MP_PS with screws M6×14 using T5 Wrench.

Handle & Bracket Ⅰ Installation

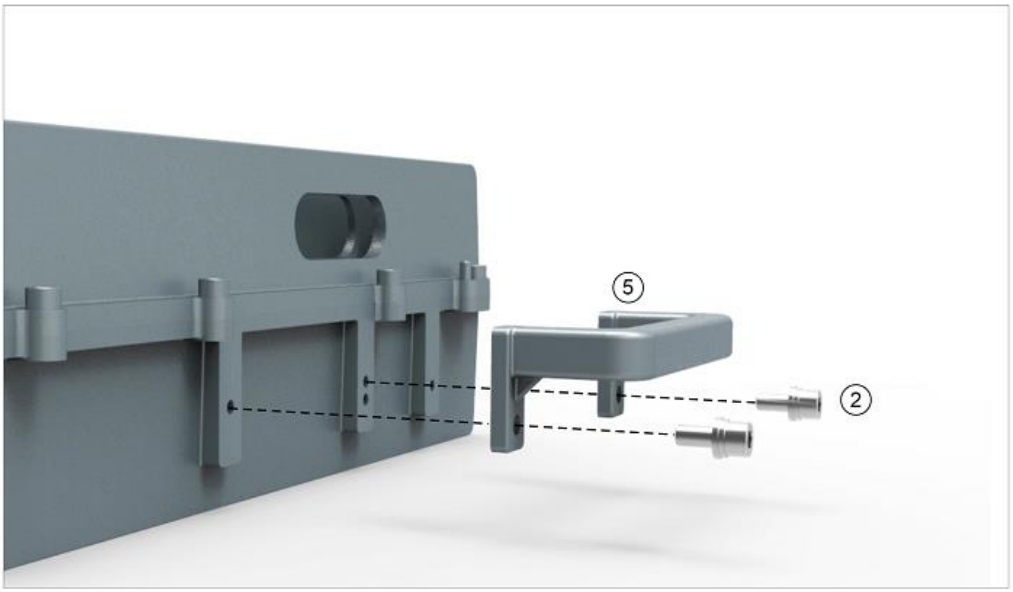

Fasten the handle to the side of MP-PS with 2×M6×14 screws.

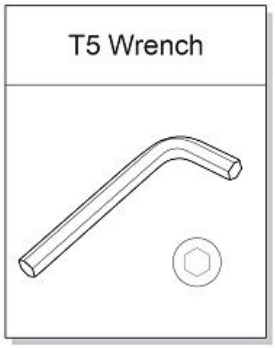

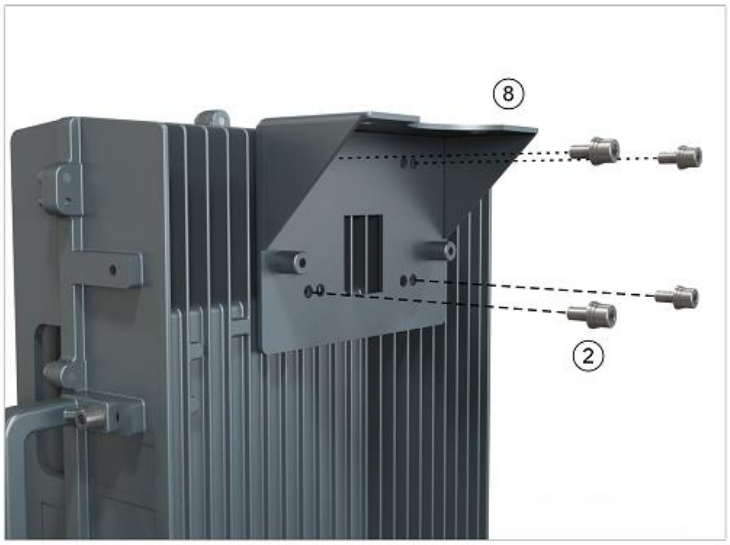

Fasten the mounting bracket Ⅰ to the back of MP-PS with 4×M16×14 screws.

4. Hang the MP_PS on the mounting bracket and fasten with nuts M10.

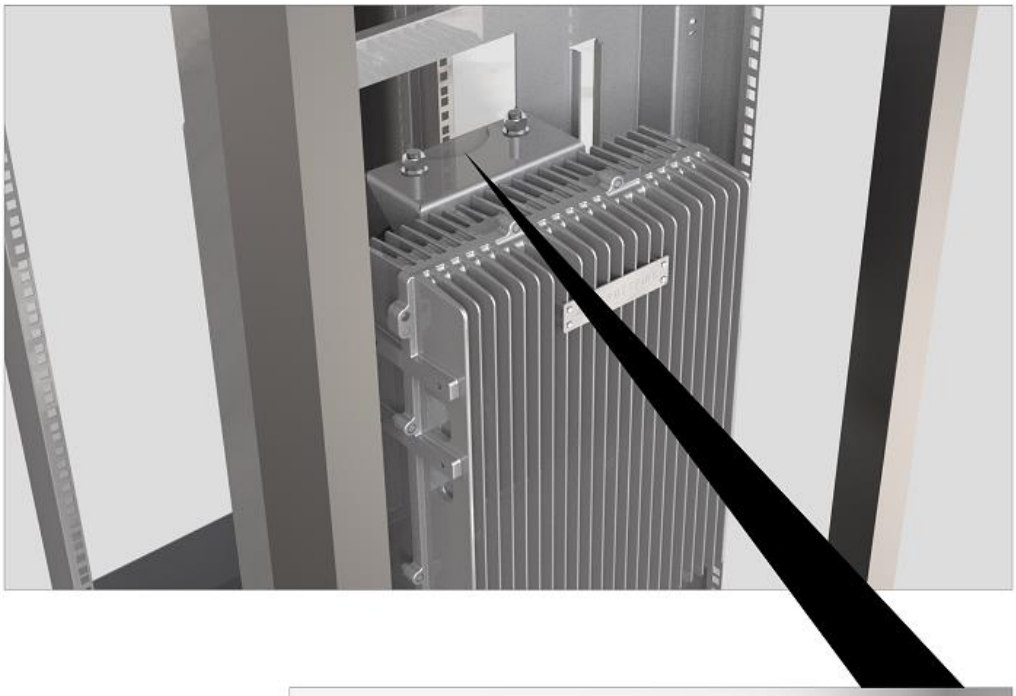

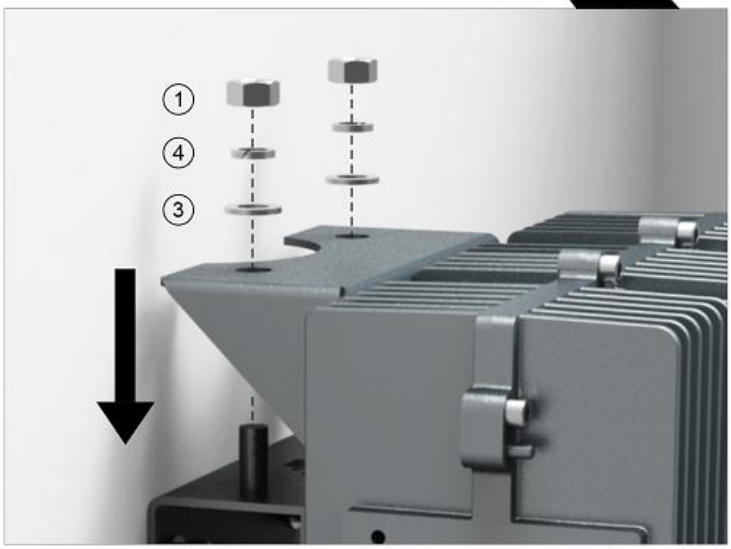

Hang the MP-PS on the mounting bracket Ⅰ and fasten with 2×M10 nuts.

5. Connect the ground cable and power cable.

6. Connect and screw the ground cable

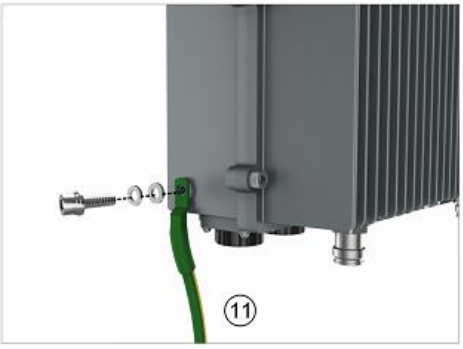

· Connect and screw the ground wire to MP-PS.

· Connect and tighten the power cable to MP-PS.

MP_PS Wall Mounting Dimension Spacing

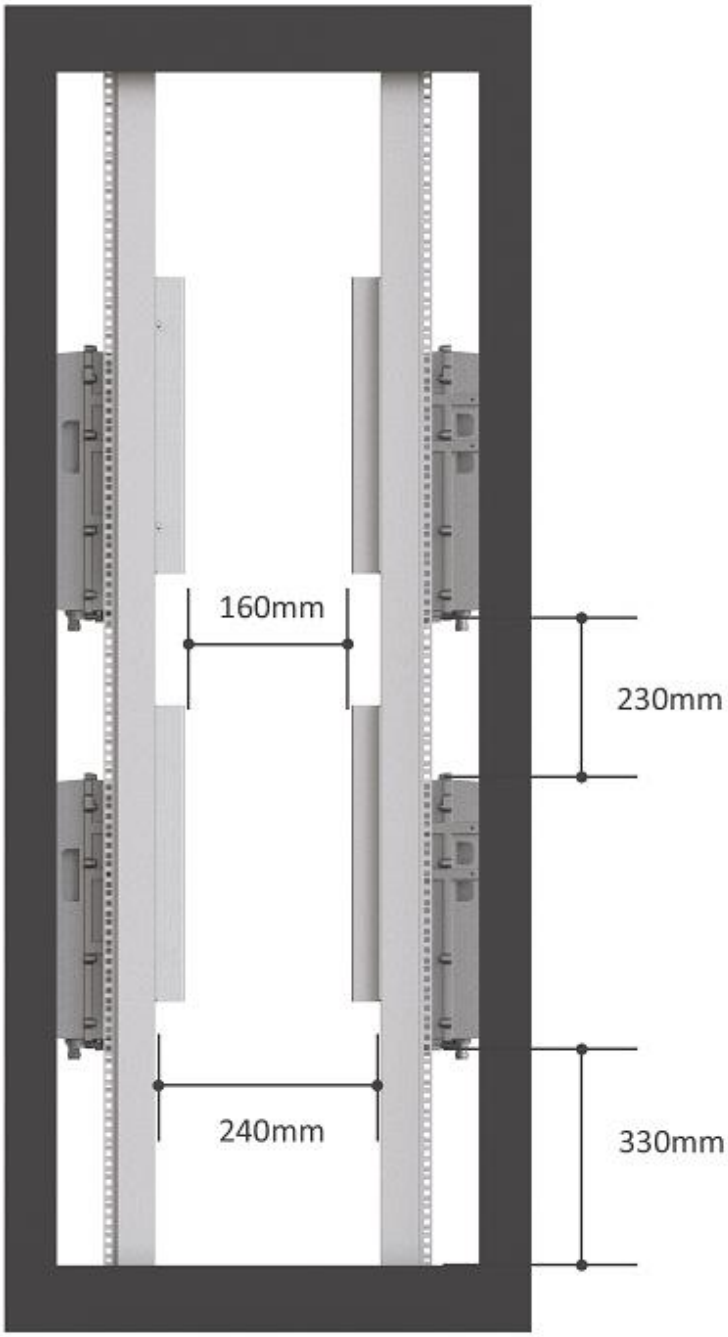

Contact us today:
www.sunwave.com
cf_support@sunwave.com

Optical Connection

Optical Transceiver Module

Single Port Bidirectional SFP Transceiver

The Figure below shows a pair of single port Bidirectional SFP transceivers. For devices optical connection, the transceivers of two sides must be paired - the wavelength of one side is 1271nm, and the wavelength of another side is 1331nm. Otherwise it will fail the connection. All lower-level devices under this port won't be working in system.

All the optical ports of all type devices have triangle LED indicators pointing to each port, which represents the synchronization status of the upper and lower optical modules. The indicator turns to green when optical modules are plugged in ports and synchronized. When connection is down, or there is no optical module in port, the indicator remains red.

⚠ The single port SFP modules have to be used in pairs.

Dual Port SFP Transceiver

The optical connector unit includes an optical module and optical fibre. The Figure below shows that when using dual-port SFP module, the optical transmitter and optical receiver should correspond to each other. In other words, the optical transmitter of optical module A should correspond to the optical receiver of optical module B, and the receiver of A should correspond to the transmitter of B. The optical receiver and transmitter terminals of the optical module can be determined by the triangular mark on the optical module. The triangular mark in the yellow box and the red and blue lines indicate the optical fibre connections.

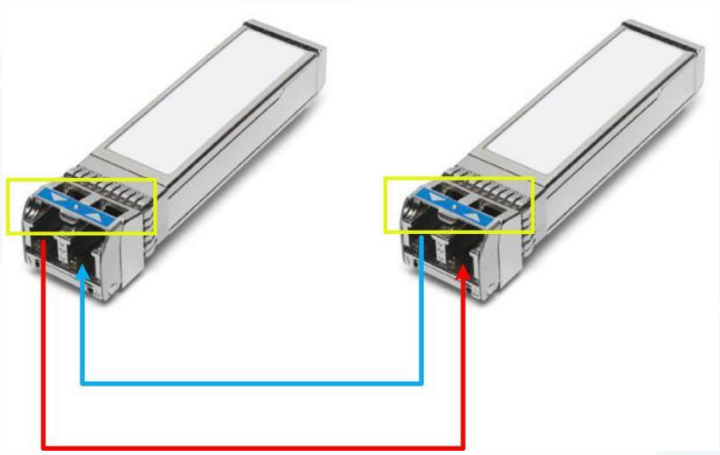

Optical Indicator
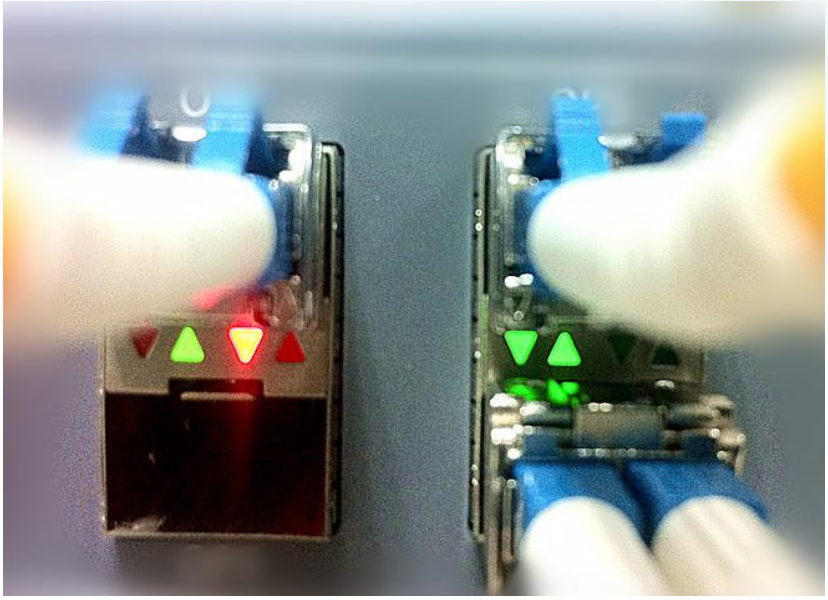
Each pair (2) of optical module cages has four LED indicator arrows. The two on the left are green, and the two on the right are red as shown in Figure below. The indicator arrows represent the synchronization status of the upper and lower optical modules. When a pair of optical modules are synchronized (both uplink and downlink), the indicators turn green as shown in the right pair of indicators in Figure below. When the optical module is unplugged or not synchronized, the indicators are red as shown in the left pair of indicators. Check whether both indicators turn green after connecting one pair of optical modules. If the indicators are red, the terminal has not synchronized.