Leica
MICROSYSTEMS

EZ4 Stereomicroscope
EZ4 E Stereomicroscope
EZ4 W Stereomicroscope
User Manual

Congratulations!

You have just purchased a E Series stereo microscope – an excellent choice! Viewing entire objects under magnification imparts perspectives and discoveries that would not be possible with the naked eye.

In developing our stereo microscopes, we have placed great emphasis on simple, self-explanatory operation. However, please take the time to read the instruction manual and the notes on operating safety, to learn about all the features and capabilities of your instrument so that you can use it safely and to its best advantage. Should you have any questions, please consult your local Leica representative. We are gladly at your service!

Chapter Overview

Safety and Use 6

EZ4, EZ4 E or EZ4 W Stereomicroscopes 14

Eyepieces (Only for EZ4) 25

Photography Using the EZ4 E or EZ4 W Stereomicroscopes 33

Get Set! 39

The Camera Remote Control (Optional) 47

Care, Transport, Contact Persons 60

Specifications 62

Dimensions 66

Contents

Congratulations! 2
Chapter Overview 3
Contents 4

Safety and Use 6
Symbols Used 7
Safety Instructions 8
Regulatory Compliance Information (Regarding EZ4 W Only) 10
Instructions for Use 12

EZ4, EZ4 E or EZ4 W Stereomicroscopes 14
Overview: EZ4 Stereomicroscope 15
Instrument Variant: EZ4 E or EZ4 W Stereomicroscope 16
Transport, Placement and Storage 17
The Correct Interpupillary Distance 18
Switching on the LED Illuminator 19
Controlling the Automatic Shutoff 20
Illumination Types 21
Focusing 22
Magnification Display 23
Adjusting the Resistance of the Focus Drive 24

Eyepieces (Only for EZ4) 25
Changing Eyepieces (Only for EZ4, Open Version) 26
Eyepieces and Eyecups (Only for EZ4, Open Version) 27
Dioptric Correction (Only for EZ4, Open Version) 28
Graticules (Only for EZ4, Open Version) 30
Graticules: Preparation 31
Inserting the Graticules 32

Photography Using the EZ4 E or EZ4 W Stereomicroscopes 33
Introduction 34
The Basics 35
EZ4 E or EZ4 W: Overview 36
Unpacking 38

Get Set! 39
USB Mode – Capturing and Adjusting Images Using a Computer 40
SD Mode – Capturing Images Without a Computer or Without a Wireless Device 42
Adjusting Settings While in SD Mode 44
WiFi Mode – Capturing and Adjusting Images Using a Wireless Device (Only Available for EZ4 W) 45
Ethernet Mode – Capturing and Adjusting Images Using a Network 46

Contents (Continued)

The Camera Remote Control (Optional)	47
Optional Remote Control	48
Viewing Images and Movies With the Optional Remote Control	49
Calling up the Camera Menu	50
COLOR (Automatic White Balance)	51
COLOR (Manual White Balance)	52
EXPOSURE	53
RESOLUTION	54
SETUP CAMERA (Camera Settings)	55
SETUP USER	56
SETUP ETHERNET	57
SETUP WiFi (Only for EZ4 W)	58
Pairing Cameras With Remotes	59

Care, Transport, Contact Persons	60
Care, Transport, Contact Persons	61

Specifications	62
Specifications	63
Specifications (Only for EZ4 W)	64

Dimensions	65
EZ4 E or EZ4 W Stereomicroscope	66
EZ4 Stereomicroscope, 10× Eyepieces	68
EZ4 Stereomicroscope Without Eyepieces	70

Safety and Use

Symbols Used

Read and understand user manual before using this device.

Warning of a danger

This symbol indicates especially important information that must be read and complied with. Failure to comply can cause the following:

- Hazards to personnel
- Functional disturbances or damaged instruments

Warning of hazardous electrical voltage

This symbol indicates especially important information that, if not observed, can cause the following:

- Hazards to personnel
- Functional disturbances or damaged instruments

Important information

This symbol indicates additional information or explanations that intend to provide clarity.

UK Responsible Person

Leica Microsystems (UK) Limited
Larch House, Woodlands Business Park, Milton Keynes, England, United Kingdom, MK14 6FG

Safety Instructions

Before installing, operating or using the instrument, it is mandatory to read this user manual. In particular, please observe all safety instructions.

The "Safety Concept" booklet contains additional safety information regarding service work, requirements and the handling of the microscope, accessories as well as general safety instructions.

You can combine individual system articles with articles from external suppliers. Please read the user manual and the safety requirements of the supplier.

To maintain the unit in its original condition and to ensure safe operation, the user must follow the instructions and warnings contained in these user manuals.

Warning of a danger

This symbol indicates especially important information that is mandatory to read and observe. Failure to follow these instructions may pose hazards to personnel, cause instrument malfunctions or damage the instrument.

Hazardous electrical voltage

This symbol indicates especially important information that is mandatory to read and observe. Failure to follow these instructions may pose hazards to personnel, cause instrument malfunctions or damage the instrument.

Important information

This symbol indicates additional information or explanations that intend to provide clarity.

EC Declaration of Conformity

Electrically operated accessories are constructed based on the state of the art of technology and are provided with an EC Declaration of Conformity.

Technical safety

To connect the E Series microscopes to power, use a power cable that meets the power cable specifications in your country. The power socket used has to be equipped with a 16 A or 10 A fuse. Only connect the instrument to a grounded power socket that has been installed according to regulations. The power supply voltage has to correspond to the voltage specified on the identification label. Make sure that the ground connection is neither defective nor interrupted, since otherwise a malfunction poses a risk of fatal injury. Never unplug the power plug with moist or wet hands. There is danger of an electric shock.

Safety Instructions (Continued)

Instrument safety and EMC

Our device has been designed, produced and tested in compliance with

- IEC EN 61010-1: Electrical equipment for measurement, control and laboratory use – Safety – Part one: general requirements
- Radio interference suppression in compliance with EN 55011 class B
- EN 61326-1: Electrical equipment for measurement, control and laboratory use - EMC requirements

The device meets the requirements of EU directives

- 2014/35/EU Low voltage directive
- 2014/30/EU EMC directive
- 2011/65/EU RoHS directive
- 2014/53/EU Radio equipment directive (only EZ4W)

and carries the CE mark.

The device must be disposed of in accordance with 2012/19/EU WEEE directive.

Intended for indoor use only in all EU member states, EFTA states and Switzerland.

EZ4 W

- EN 300328: Electromagnetic compatibility and Radio spectrum Matters (ERM); Wide-band transmission systems; Data transmission equipment operating in the 2.4 GHz ISM band and using wide band modulation techniques; Harmonized EN covering essential requirements under article 3.2 of the RED directive
- EN 61326-1, Electrical equipment for measurement, control and laboratory use – EMC requirements

Regulatory Compliance Information (Regarding EZ4 W Only)

FCC Requirements for Operation in the United States

FCC radio frequency interference warnings and instructions

This equipment has been tested and found to comply with the limits for a **Class A digital device**, pursuant to Part 15 of the FCC Rules. These limits are designed to provide reasonable protection against harmful interference in a residential installation. This equipment generates, uses and can radiate radio frequency energy and, if not installed and used in accordance with the instructions, may cause harmful interference to radio communications. However, there is no guarantee that interference will not occur in a particular installation. If this equipment does cause harmful interference to radio or television reception, which can be determined by turning the equipment off and on, the user is encouraged to try to correct the interference by one or more of the following measures:

- Reorient or relocate the receiving antenna.
- Increase the separation between the equipment and receiver.
- Connect the equipment into an outlet on a circuit different from that to which the receiver is connected.
- Consult the dealer or an experienced radio/TV technician for help.

FCC information to user

This product does not contain any user serviceable components and is to be used with approved antennas only.

Any product changes or modifications will invalidate all applicable regulatory certifications and approvals.

FCC caution

- Any changes or modifications not expressly approved by the party responsible for compliance could void the user's authority to operate this equipment.
- This device and its antenna(s) must not be co-located or operation in conjunction with any other antenna or transmitter.

FCC statement

- This device complies with Part 15 of the FCC Rules. Operation is subject to the following two conditions: (1) This device may not cause harmful interference, and (2) this device must accept any interference received, including interference that may cause undesired operation.

US Agent

Datla Deepthi
Leica Microsystems Inc.
10 Parkway North, Suite 300
Deerfield, IL 60015 United States
Phone: +12247270506
Email: deepthi.datla@leica-microsystems.com

Regulatory Compliance Information (Regarding EZ4 W Only) (Continued)

Canada (IC)

This device complies with Industry Canada licence-exempt RSS standard(s). Operation is subject to the following two conditions:

(1) this device may not cause interference, and

(2) this device must accept any interference, including interference that may cause undesired operation of the device.

Canada (IC)

L'émetteur/récepteur exempt de licence contenu dans le présent appareil est conforme aux CNR d'Innovation, Sciences et Développement économique Canada applicables aux appareils radio exempts de licence. L'exploitation est autorisée aux deux conditions suivantes :

(1) L'appareil ne doit pas produire de brouillage;

(2) L'appareil doit accepter tout brouillage radioélectrique subi, même si le brouillage est susceptible d'en compromettre le fonctionnement.

Japanese Radio Law (電波法) compliance:

The device EZ4 W is granted pursuant to the Japanese Radio Law (電波法). This device should not be modified (otherwise the granted designation number will become invalid).

R 202-JCE118

Instructions for Use

Intended use

The E Series microscopes are optical instruments for improving the visibility of objects through magnification and illumination. It is used for observing and documenting.

Place of use

Use the instrument in enclosed, dust-free rooms at +10 °C to +40 °C only. Protect it from oil, chemicals and extreme humidity. It must be at least 10 cm from the wall and away from flammable substances.

Interference

Avoid large temperature fluctuations, direct sunlight and vibrations.

In warm and warm-damp climatic zones, the individual components require special care in order to prevent the build-up of fungus.

Handling electrical components

Never install any other plug (NEMA 5-15P) or unscrew any mechanical components unless expressly instructed to do so in the instructions.

The microscope must be connected to a grounded outlet.

Always position the microscope so that you can disconnect it from the power supply at any time. The power cable is provided as the power disconnect device.

WARNING By definition, the main circuit breaker of this instrument is the connection between the power cable and device port. The user must ensure unobstructed access to the main circuit breaker at all times.

Instructions for Use (Continued)

Intervention from the user

The microscopes of the E Series contain no components that can be maintained or repaired by the user. Exceptions are mentioned specifically in this manual.

Unless otherwise specified in this manual, repair and service work may be carried out by authorized Leica technicians only.

Unauthorized alterations to the instrument or noncompliant use shall void all rights to any warranty claims.

Maintenance

E Series microscopes are basically maintenance-free. To ensure that it always operates safely and reliably, we recommend that you take the precaution of contacting the responsible service organization. Here you can arrange for periodic inspections and conclude a maintenance contract (recommended).

Accessories

Only those accessories may be used that are listed in this user manual or for which safe use has been confirmed by Leica Microsystems.

Danger of infection

Direct contact with eyepieces is a potential transmission method for bacterial and viral infections of the eye. The risk can be kept to a minimum by using personal eyepieces for each individual or detachable eyecups.

Dangers during use

The microscope illumination is in the exempt group (risk group 0) according to EN 62471 when used according to its intended use.

- Never look directly into the LED beam of the illumination equipment – either with or without optical instruments – as this increases the risk class. Failure to observe this notice poses a risk of eye damage.

EZ4, EZ4 E or EZ4 W Stereomicroscopes

Overview: EZ4 Stereomicroscope

1. *10× fixed eyepieces for eyeglass wearers*
2. *Carrying handle*
3. *Magnification changer*
4. *Focusing drive*
5. *Integrated LED incident light illumination*
6. *Illumination control*
7. *Integrated LED transmitted illumination*

Instrument Variant: EZ4 E or EZ4 W Stereomicroscope

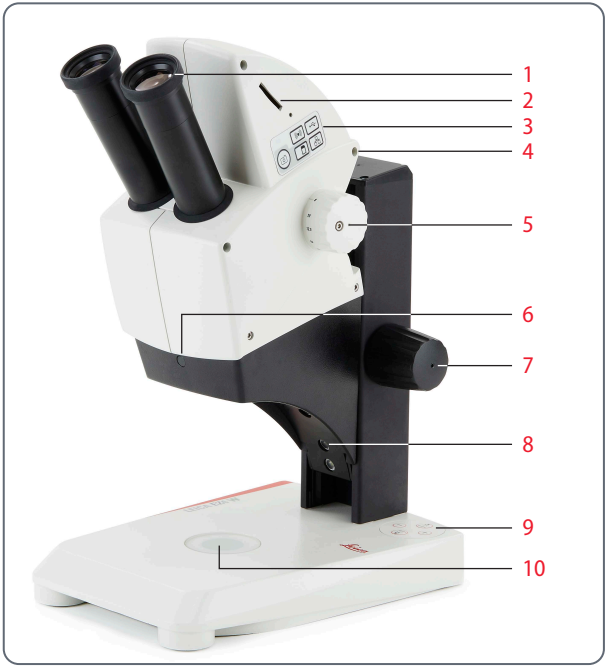

1. *10× fixed eyepieces for eyeglass wearers*
2. *Integrated digital camera with SD card slot*
3. *Mode selection panel (EZ4 E or EZ4 W)*

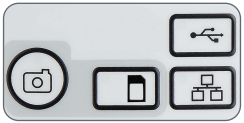

4. *Carrying handle*
5. *Magnification changer*
6. *IR receiver for optional remote control*
7. *Focusing drive*
8. *Integrated LED incident light illumination*
9. *Illumination control*
10. *Integrated LED transmitted illumination*

Transport, Placement and Storage

Built-in carrying device

All E Series microscopes are equipped with a holder for convenient and safe transport.

Setting up the microscope

1. Place the microscope on a flat tabletop.

2. Connect the power supply to a grounded socket.

Packing the device away

1. After use, wind up the cable as shown in the illustration.

2. Store the instrument so that it is protected against dust.

The Correct Interpupillary Distance

The ideal image

The interpupillary distance is correctly set if you see a single circular image field when looking at a specimen.

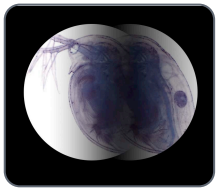

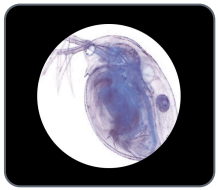

You may need a short time to become familiar with using the instrument. Not to worry – after a little while, it will become automatic.

Note for eyeglass wearers

If you wear glasses, fold the eyecups back – otherwise, fold the eyecups forwards.

Setting the eye distance

1. Look into the eyepieces.
2. Hold the eyepieces with both hands. Push the eyepieces together or separate them until you see a circular image.

Switching on the LED Illuminator

Automatic shutoff

If the illumination is not operated for 120 minutes, it switches off automatically. The illumination can be reactivated by pressing a button on the membrane keypad.

LED illumination

1. Position a specimen in the middle of the baseplate.

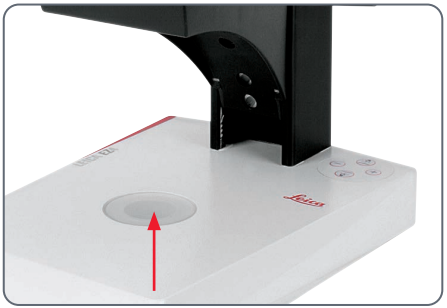

2. Switch the two LED illuminators on or off as desired:

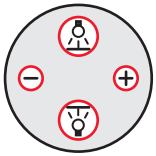

- Use incident light for plastic, opaque objects
- Use transmitted light for transmitted light specimens or transparent objects.
- Use the combination of both LED illuminators for partially transparent objects.

For a detailed description of the illuminator, refer to page 21.

Controlling the Automatic Shutoff

Automatic shutoff

The factory settings of the EZ4 models switch the instrument off automatically after one hour without user interaction. This automatic shutoff helps to conserve the light-emitting diodes and save energy.

Disabling the automatic shutoff

To disable the automatic shutoff, follow these steps:

1. Switch the microscope off.
2. Press and hold the ⊕ and ⊖ buttons on the light control unit simultaneously while you switch on the microscope.

The LEDs flash twice slowly and then remain switched on. The automatic shutoff is now disabled.

Enabling the automatic shutoff

To re-enable the automatic shutoff, follow these steps:

1. Switch the microscope off.
2. Press and hold the ⊕ and ⊖ buttons on the light control unit simultaneously while you switch on the microscope.

The LEDs flash three times slowly and then remain switched on. The automatic shutoff is now re-enabled.

Illumination Types

Three-level incident light illumination

The incident light illumination is made up of 5 LEDs. Two, three or five diodes are switched on depending on the level. Accordingly, the angle of incidence of the light beam on the object is switched from high to low.

Regulating brightness

The brightness is adjusted using the ⊖ and ⊕ keys and affects all switched-on LEDs.

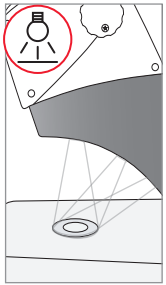

Press 1×
Five diodes: greatest brightness for incident light objects

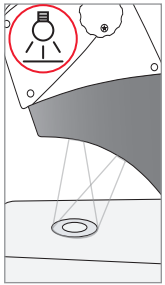

Press 2×
Top three diodes: shadowless uniform lighting for objects with highly uneven surfaces

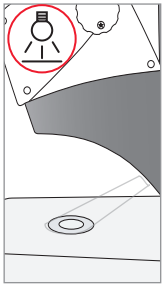

Press 3×
Two diodes: side light emphasizes structures and increases the contrast

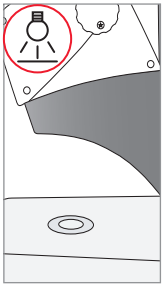

Press 4×
Incident light off

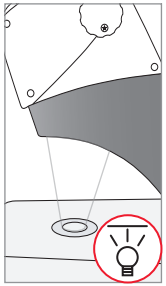

Press 1×
Switch on transmitted light for transparent objects and transmitted light specimens

Focusing

Focusing raises and lowers the stereomicroscope using the focusing drive. The specimen is brought into sharp focus as soon as it is in the focal point of the objective.

The focusing drive can be operated either left- or right-handed.

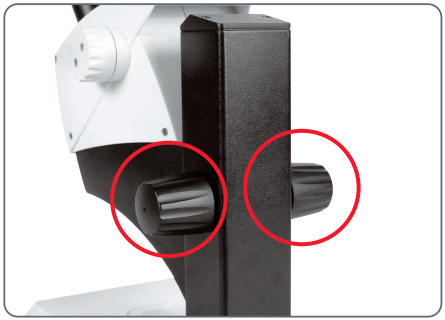

Focusing drive torque

Focusing

1. Set the magnification changer to the lowest level (8).

2. Set the working distance to approx. 100 mm for coarse focusing.

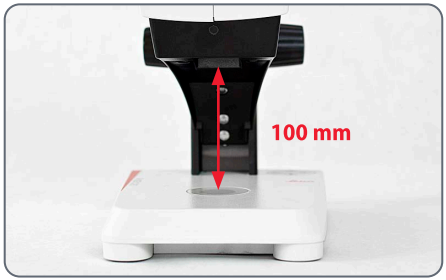

3. Set the magnification changer to the second level (35).

4. Use the focusing drive once again for fine focus.

After you have adjusted the image sharpness at high magnification, it remains constant even if you switch magnification levels (parfocal).

Magnification Display

You can read the configured magnification on the right-hand rotary knob of the EZ4 models. The additional magnification provided by the eyepieces is already incorporated in the scale

EZ4 models with open tubes

On the EZ4 model without eyepieces, only the magnification factors of the magnification changer are indicated: 0.8, 1, 1.25, 1.6, 2, 2.5, 3, 3.5.

Different total magnifications are possible depending on which eyepieces are used with the EZ4. The magnification of the eyepieces is indicated on their outer surfaces, e.g. 10×/20, 16×/16 or 20×/12.

Adjusting the Resistance of the Focus Drive

Adjusting the resistance

Is the focusing drive too easy or too difficult to adjust? No problem – the resistance can be adjusted individually depending on your personal preferences:

1. Grip the drive knobs with both hands and turn them towards each other until the desired resistance is reached during focusing.

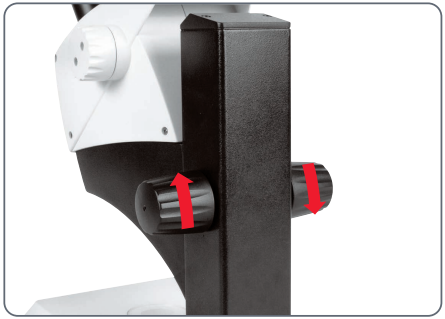

Eyepieces (Only for EZ4)

Changing Eyepieces (Only for EZ4, Open Version)

Changing eyepieces

Various eyepieces are available for the EZ4, allowing the stereo microscope to be adapted even better to the specific requirements.

The following eyepieces are available for selection:

- Eyepieces replaceable, fixed or adjustable: 10×/20, 16×/16 or 20×/12
- Eyepieces for eyeglass wearers 10×/20B and 16×/15B, fixed and adjustable

The interchangeable eyepieces also offer the following advantages:

- The dioptric range is adjustable from +5 to –5.
- Measurement graticules can be used, see page 30 and the following.

Adjustable eyepieces for eyeglasses with straight eyecups

Eyepieces and Eyecups (Only for EZ4, Open Version)

Eyecups
The eyecups can be replaced.

Risk of infection
Direct contact with eyepieces is a potential transmission method for bacterial and viral infections of the eye. The risk can be minimized by the use of individual eyecups.

Eyeglass eyepiece with adjustable diopter and straight eyecups

Eyepiece for users who do not wear eyeglasses with adjustable diopter and inclined eyecup

Fixed eyepiece with inclined eyecup

Dioptric Correction (Only for EZ4, Open Version)

Dioptric correction

The adjustable eyepieces for the EZ4 are also available with built-in dioptric correction, allowing the microscope to be used without glasses even by those with vision problems. The correction comprises a maximum of ±5 diopter settings.

Users with normal vision do not need adjustable eyepieces. An adjustable eyepiece is sufficient for mild shortsightedness.

If vision is extremely poor or when graticules are used, two adjustable eyepieces are needed.

When the diopters are regulated exactly, the sharpness is constant over the entire magnification range (=parfocal).

Once the diopters have been set, the procedure does not have to be repeated. Simply restore your diopter values on the eyepiece before beginning work with the stereo microscope.

Adjusting

1. Set the dioptric correction for both eyepieces to "0".
2. Select the lowest magnification and focus on a flat specimen.
3. Select the highest magnification and readjust the sharpness.
4. Select the lowest magnification again, but do not look into the eyepieces.
5. Carry out steps 6 to 8 for each objective individually.
6. Rotate the eyepiece counterclockwise in the "+" direction as far as it will go (+5 diopter settings).

Dioptric Correction (Continued)

7. Look into the eyepiece.

8. Slowly rotate the eyepiece individually in the "–" direction until the eye sees the object sharply imaged.

9. Select the highest magnification and refocus if necessary.

Now, if you adjust the magnification from the highest to the lowest level, the specimen is always brought into sharp focus. If not, repeat the process.

Graticules (Only for EZ4, Open Version)

Graticules

The transparent graticules can be inserted in the adjustable eyepieces of the EZ4. They enable easy measurements at the specimen.

For equipment with a graticule in one eyepiece, two adjustable eyepieces are needed. Since one eye is focussed on the eyepiece with the graticule, it needs a second, adjustable eyepiece so that it can be aligned optically with the first.

Available eyepiece inserts	
Graticules	10 mm/ 0.1 mm
	5 mm/ 0.1 mm
	5 mm/ 0.05 mm
	100 Div / 0.002"
	100 Div / 0.001"
	150 Div / 0.0005"
Stage micrometers	50 mm (0.1 / 0.01 mm graduation)
	1" (0.001" graduation)
Crosshairs	Crosshairs

Graticules: Preparation

Care instructions

The graticule must always be clean and dust-free! Never touch the graticule with bare hands! Always hold the graticule by the edges!

Variant 1: 10× and 20× eyepieces

The 10× and 20× adjustable eyepieces include an insert at the bottom with a snap mount.

1. Gently press the two small tabs on the snap mount together and pull out the insert.

Variant 2: 16× eyepieces

On the 16× adjustable eyepieces, the insert is fixed to the eyepiece by a screwed connection.

1. Screw the insert out counterclockwise.

Inserting the Graticules

Inserting the graticules is the same for all eyepiece types.

1. Place the insert with the knurled side on the work surface.

2. Grasp the graticule so that you see the scale in laterally correct form.

3. Carefully take hold of the edge of the graticule and push it sideways into the holder in the insert. Make sure that both plastic holders snap into place.

4. Put the insert back into the eyepiece. Depending on the variant, you have to either press or twist the insert into place.

5. Insert the eyepiece into the tube.

6. Align the graticules by turning the eyepiece in the tube.

Photography Using the EZ4 E or EZ4 W Stereomicroscopes

Introduction

Thank you for purchasing the EZ4 E or EZ4 W by Leica Microsystems. The special design of the EZ4 E or EZ4 W makes it a universal, highly versatile tool for viewing microscopic specimens and capturing still images or video.

Firmware for cameras is constantly being updated. Be sure to keep your camera up-to-date by checking the download section on the camera's web page. There you'll find new firmware and instructions on how to update your camera. You may also contact your representative for help.

The Basics

Your HD camera has many possibilities for various applications and conditions of use. Below are some basic concepts to help you get the most performance for your application.

Modes of use

1. SD mode
   - *capture onto SD card*
   - *use remote control*

2. WiFi mode (only available for EZ4 W)
   - *Wireless connection to wireless device (tablet, phone, PC)*

3. USB mode
   - *Cabled connection to PC*

4. Ethernet mode
   - *Cabled connection to external network*

5. Capture button
   - *Captures image onto the SD card*

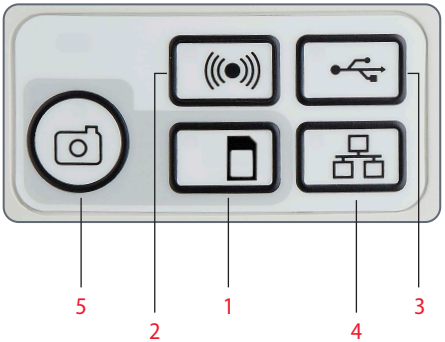

Note direct connection to an HD display is possible in all modes. Aspect ratio is 16:9 except in USB mode where the aspect ratio is 4:3.

EZ4 E or EZ4 W: Overview

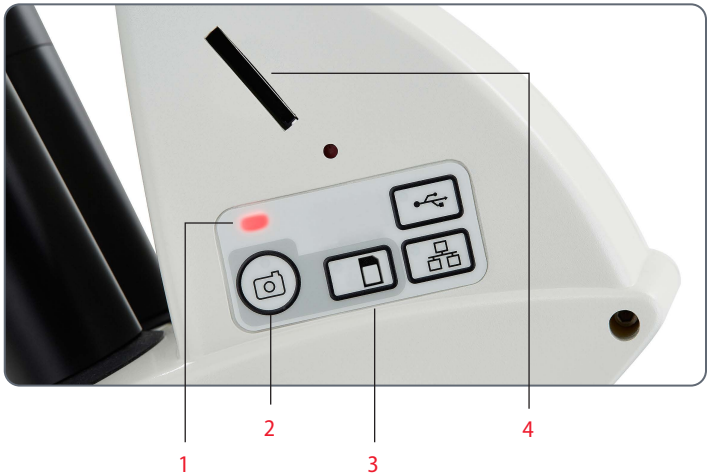

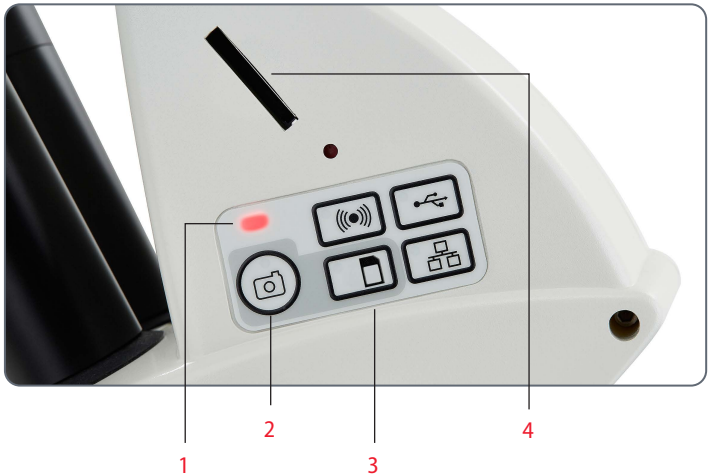

1. *LED status indicator*

   - *Blinking red means starting up*
   - *Green means ready*

2. *Capture button for SD card capture*

3. *Mode selection panel*

4. *SD card slot*

EZ4 E or EZ4 W: Overview (Continued)

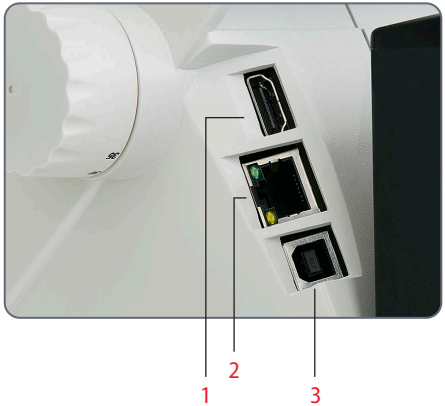

1. *HDMI for connecting the provided HDMI cable*
2. *Ethernet socket for connecting an ethernet cable (cable not provided)*
3. *USB for connecting the provided USB cable*

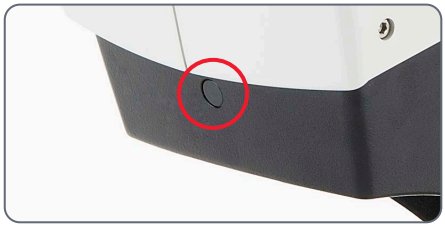

Front

Infrared window: Receives the signal from the optional remote control.

Unpacking

Please do not discard any of the packing materials. They should be used for safely storing and transporting the instrument should the need arise.

The contents include CD with imaging software, HDMI cable, and USB cable.

If you ordered the handheld remote, you received the remote with batteries.

Get Set!

USB Mode – Capturing and Adjusting Images Using a Computer

10× eyepieces have a fixed circular field of view of 18 mm or more diameter. The EZ4 E or EZ4 W 's field of view, however, is rectangular with a diagonal of 16.4 mm to ensure an even field on the digital image. As a result, the image field of the camera is smaller than the object field seen through the eyepieces.

Installing and connecting

1. Insert the provided CD into your computer, and follow the instructions to load the software.

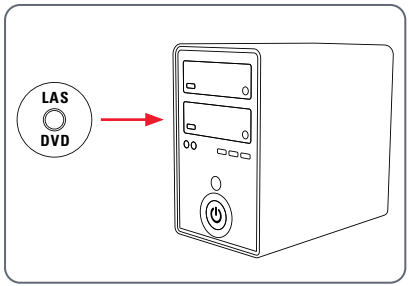

2. Insert the provided USB cable into the camera's USB port, and attach the other end of the cable to a USB 2.0 port of your computer.

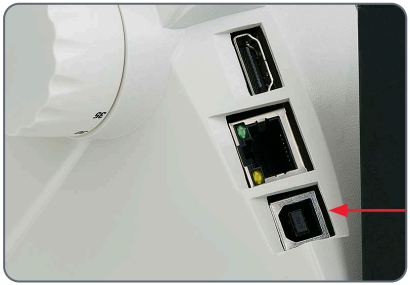

3. Switch on the power of the EZ4 E or EZ4 W microscope.

4. The status light will blink red. Wait until the status light is green and one of the mode button's is also green. This may take approximately 30 seconds.

USB Mode – Capturing and Adjusting Images Using a Computer (Continued)

5. If a mode button other than USB mode is lit green, then press the USB mode button and wait until both the status LED and the USB mode button is green.

6. You are ready to launch the Leica software. Follow the software instructions to adjust and capture an image.

7. While in USB mode, you can connect the provided HDMI cable from the camera to an HD monitor or HD projector to share the image.

Note: You won't be able to write or read the SD card, if the camera is connected via USB cable with your PC.

Note the image aspect ratio while in USB mode is 4:3. To avoid distortion if your projector or monitor is set to a 16:9 aspect ratio, you will need to adjust the aspect ratio of the projector or monitor to 4:3 using the controls of the projector or monitor.

4:3 aspect ratio

Note the image resolution on the HD projector or monitor is limited to the live image resolution setting in the software.

4:3 aspect ratio image on a screen set to an aspect ratio of 16:9

SD Mode – Capturing Images Without a Computer or Without a Wireless Device

In order to use this mode, you must have an SD card (not provided) with free memory on it. If the SD memory card is full, the capture button LED will not light green and you will not be able to capture any more images.

Attaching the power cable

1. Switch on the power to the EZ4 E or EZ4 W microscope.

2. The status light will blink red. Wait until the status light is green and one of the mode button's is also green. This may take approximately 30 seconds.

3. If a mode button other than SD mode is lit green, then press the SD mode button and wait until both the status LED and the SD mode button is green.

4. Insert the SD memory card into the slot on the side of the EZ4 E or EZ4 W until the card clicks into place.

SD Mode – Capturing Images Without a Computer or Without a Wireless Device (Continued)

The capture button LED will turn green. The EZ4 E or EZ4 W is now ready to capture images onto the SD memory card.

Capturing an image

Focus the microscope at high magnification, then change to the magnification at which you wish to capture the image. Do not refocus the microscope. You can also use the HDMI output and an HD display (not provided) as a focusing aid.

5. To capture an image onto the SD memory card, lightly press the capture button, located on the side of the EZ4 E or EZ4 W camera.

- You will hear a beep to acknowledge the button was pressed.
- The status LED flashes red while the image is being captured.

- You will hear another beep when the EZ4 E or EZ4 W has completed capturing the image and the status LED will return to steady green.

The image is now saved on the SD card. Images which are on the SD card can be viewed using the optional remote control. See "Camera Remote Control" on page 47.

6. While in SD mode, you can connect the provided HDMI cable from the camera to an HD monitor or HD projector to share the image.

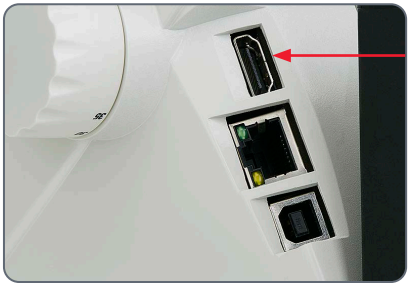

Adjusting Settings While in SD Mode

Setting a new white balance

Make sure that there is no sample in the beam path and that a standard illumination is available when you reset the camera.

Press and hold the capture button for 5 seconds. Wait for the beep. A new white balance is set.

Return to factory settings

Press and hold the service button for 5 seconds. Wait for the beep. The camera will now reset to factory settings.

WiFi Mode – Capturing and Adjusting Images Using a Wireless Device (Only Available for EZ4 W)

1. Switch on the power to the EZ4 W microscope.

2. The status light will blink red. Wait until the status light is green and one of the mode button's is also green. This may take approximately 30 seconds.

3. If a mode button other than WiFi mode is lit green, then press the WiFi button and wait until both the status LED and the WiFi mode button is green.

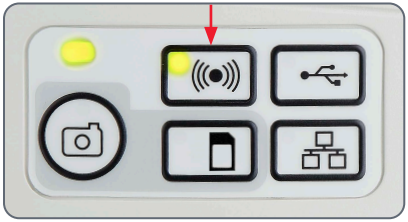

4. Follow the directions of your WiFi viewing device to connect to the internal WiFi network of the camera. WiFi Password: leicamicro

5. Open the appropriate app on your mobile device or appropriate software on your wireless enabled PC for viewing, capturing, and adjusting the camera image.

Ethernet Mode – Capturing and Adjusting Images Using a Network

1. Connect one end of an ethernet cable (not provided) to the camera and the other end of the cable to the ethernet connection in your facility.

2. Switch on the power to the EZ4 E or EZ4 W microscope.

3. The status light will blink red. Wait until the status light is green and one of the mode button's is also green. This may take approximately 30 seconds.

4. If a mode button other than ethernet mode is lit green, then press the ethernet button and wait until both the status LED and the ethernet LED mode button is green.

5. Follow the directions of your network compatible device to connect to your facilities network and select the camera.

6. Open the appropriate app on your mobile device or appropriate software on your wireless enabled PC for viewing, capturing, and adjusting the camera image.

The Camera Remote Control (Optional)

⚠ The remote control is designed to work only when the camera is in SD mode and when the camera is used in combination with an HD display.

The only function which works in any mode is the "Info" function which shows details about the camera.

Optional Remote Control

The remote control can only work in SD mode except for the "i" button which will display information about the camera on an HD display. The remote must be pointed at the IR receiver of the camera without obstructions.

1. *Start/stop video recording*
   The max. recording time of a movie is 23.00 min. After this time you have to restart the recording again.
2. *Save still image to SD card*
3. *Pause/play movie clip*
4. *View files on SD card*
5. *Move to previous image on SD card*
6. *Move to next image on SD card*
7. *Brightness adjustment up or down*
8. *Pairing button*
9. *Show/hide information box*
10. *White balance set button*
11. *Call up the camera menu*
12. *Arrow keys for navigation*
13. *OK to confirm*

Viewing Images and Movies With the Optional Remote Control

If you have purchased the optional remote, the HD camera shows images and movie clips directly on an HD monitor.

1. Thumbnail view (first press)

- up/down/left/right ▶ select thumbnail
- OK Show image in full screen or playback movie clip
- next image + / previous − image
- ▶ Play movie clip
- left /right ▶ fast forward / rewind

2. To return to live view press .

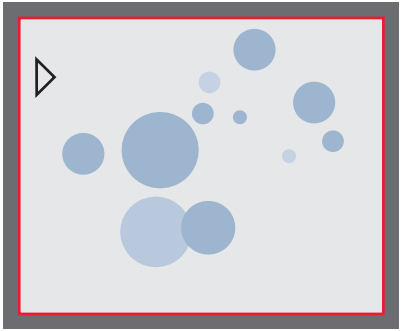

Playback / fullscreen view

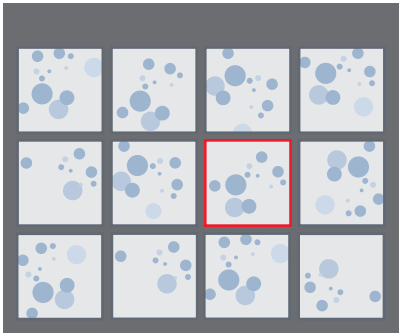

Thumbnail view

Calling up the Camera Menu

The remote control can only work when the camera is in SD mode.

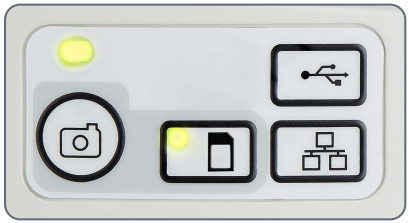

EZ4 E

EZ4 W

Opening and closing the camera menu

1. Point the remote control towards the camera.
2. Press the ▤ key on the remote control to show the camera menus on the monitor.
3. Press the ▲ ▼ ◀ and ▶ buttons to select a menu item.
4. Press the (OK) button to confirm a menu item.
5. Press the ▤ button again to hide the camera menus.

COLOR (Automatic White Balance)

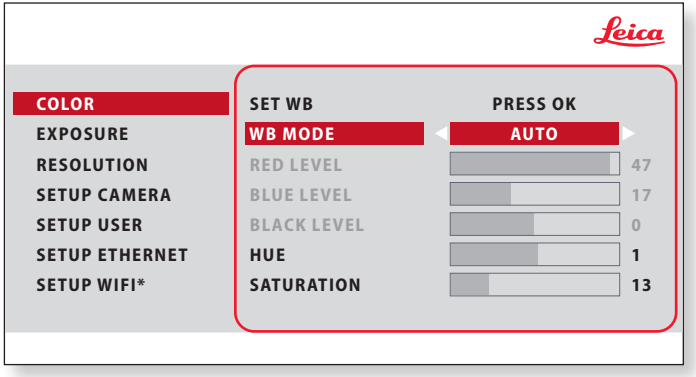

* SETUP WIFI only for EZ4 W

The "COLOR" function makes it possible to adapt the camera chip to the ambient light so that color-neutral images can be acquired.

Enabling automatic white balance

1. Press the ▤ button on the remote control.
2. Call up the "COLOR" entry.
3. Set the value for "WB MODE" to "AUTO".
4. Press the ▤ button to exit the menu.

The values for "RED" and "BLUE" cannot be adjusted if the "WB MODE" setting is set to "AUTO".

COLOR (Manual White Balance)

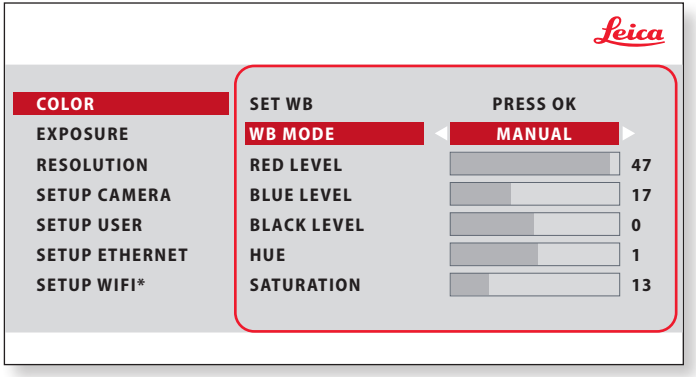

* SETUP WIFI only for EZ4 W

The "COLOR" function makes it possible to adapt the camera chip to the ambient light so that color-neutral images can be acquired.

Adjusting the white balance manually (recommended)

1. Move the specimen out of the field of view so that only the illumination is seen.
2. Press the ☰ button on the remote control.
3. Call up the "COLOR" entry.
4. Set the "WB MODE" to "MANUAL".
5. If necessary, correct the values for "RED" and "BLUE" until the image shows a uniform gray area.
6. Press the ☰ button to exit the menu.

EXPOSURE

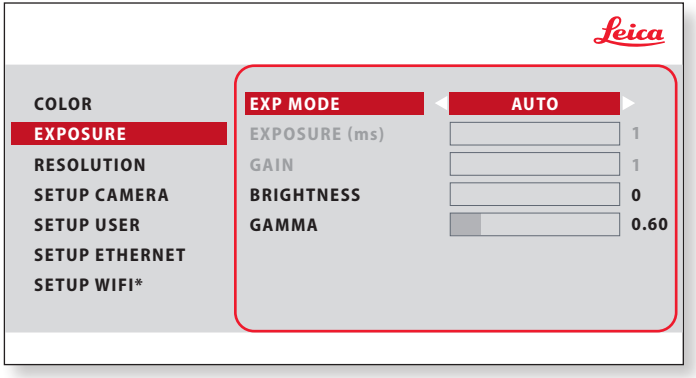

Automatic exposure

1. Press the button on the remote control.
2. Call up the command for automatic exposure (see diagram at the left).
3. Set the value for "EXP MODE" to "AUTO".
4. Correct the values for "BRIGHTNESS" and "GAMMA" until you obtain the desired results for the image.

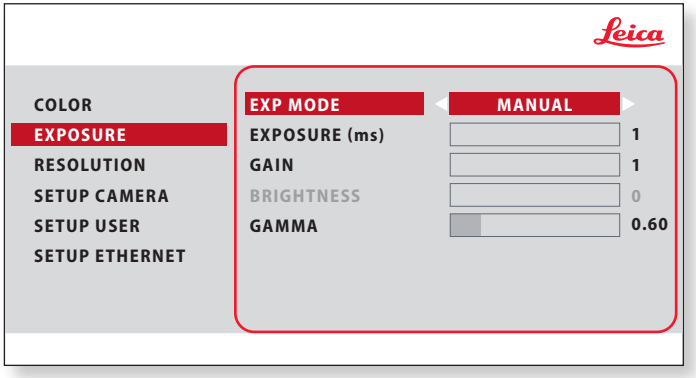

Manual exposure

1. Press the button on the remote control.
2. Call up the command for manual exposure (see diagram at the left).
3. Set the value for "EXP MODE" to "MANUAL".
4. Correct the values for "EXPOSURE", "GAIN" and "GAMMA" until you obtain the desired results for the image.

* SETUP WIFI only for EZ4 W

RESOLUTION

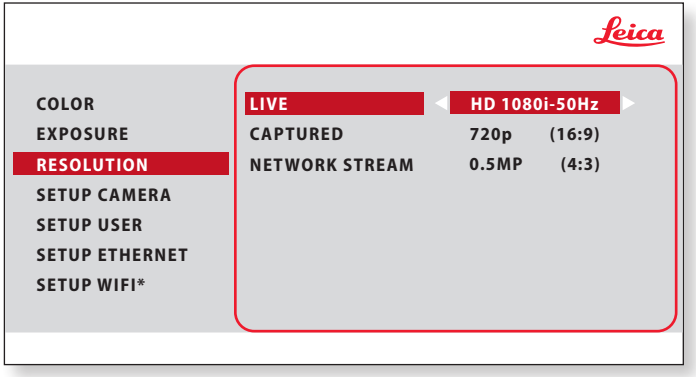

* SETUP WIFI only for EZ4 W

The "RESOLUTION" menu enables you to define the resolution for the live image, still image capture and network stream individually. This provides optimum results in every situation. Video capture on SD card will always be 1,920 × 1,080 resolution.

LIVE (resolution of the live image)

Defines the resolution of the live image. After changing the live resolution, you will see a message on the HD screen that you can accept the new resolution by pressing "OK" otherwise, the live resolution will return to the previous setting.

CAPTURED (resolution of the captured image)

Defines the resolution of the captured image on the SD card.

NETWORK STREAM

Indicates the resolution of the live image when in WiFi or Ethernet mode.

SETUP CAMERA (Camera Settings)

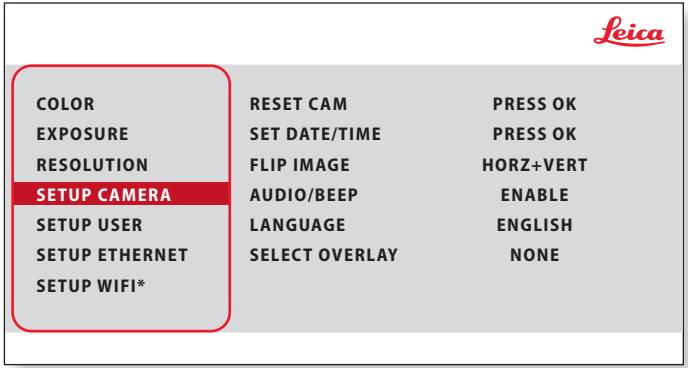

* SETUP WIFI only for EZ4 W

The camera settings enable you to control internal parameters such as the date or time, reset the camera, etc.

RESET CAMERA

This command resets the camera to the factory settings. All user information (such as white balance, resolution etc.) is reset.

SET DATE TIME

This command sets the date and time as well as the format for displaying them. The following formats are available for selection: YYMMDD – DDMMYY – MMDDYY

FLIP IMAGE

Select to flip image 180°.

AUDIO/BEEP

You can decide to have a tone from the camera for some functions.

LANGUAGE

Select the language of the On Screen Display.

SELECTING IMAGE OVERLAYS (SELECT OVERLAY)

Press ◄ ► to select another overlay. Press OK to activate the selected overlay and leave the menu.

If you want to quickly display other overlays, press when the live image is displayed ▼ ▲ to show the next or previous respective overlay.

SETUP USER

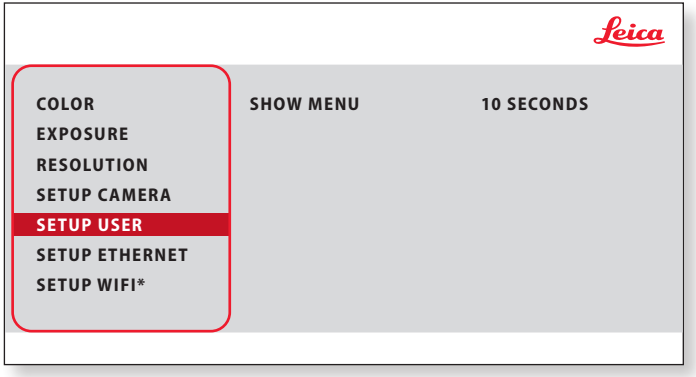

* SETUP WIFI only for EZ4 W

SETUP USER

Here you can decide to have the menu remain on screen for 10 seconds or until you press the menu button again.

SETUP ETHERNET

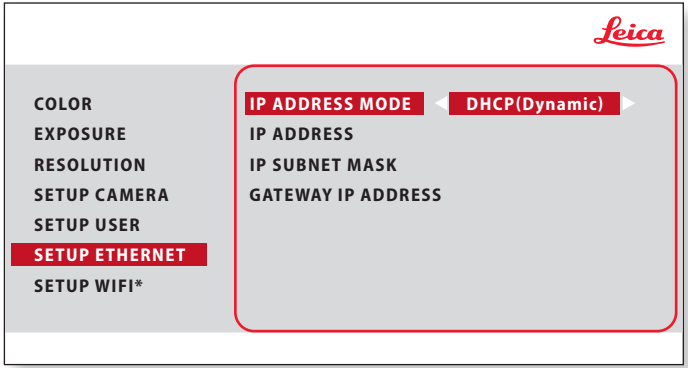

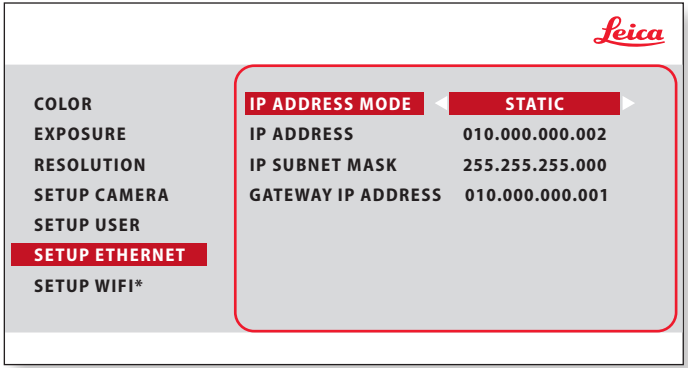

* SETUP WIFI only for EZ4 W

This menu allows you to customize parameters relevant to working in Ethernet mode. Consult with your local IT expert for information relating to your local network.

IP ADDRESS

You can decide if you want the IP address to be set by your network (Dynamic) or by you using the onscreen keyboard (Static).

If you selected "STATIC" for the IP address you can input the following using the onscreen keyboard:

- IP address
- IP subnet mask
- Gateway IP address

SETUP WiFi (Only for EZ4 W)

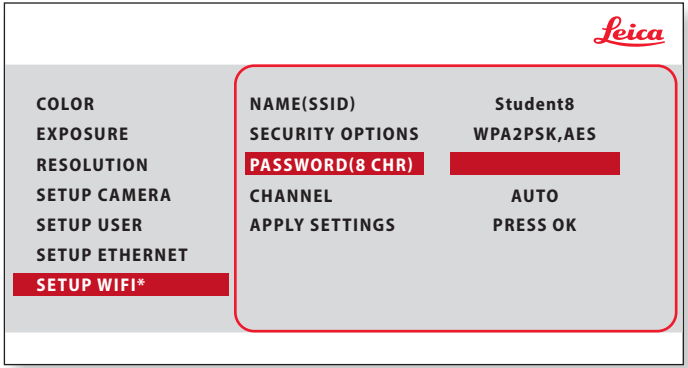

* SETUP WIFI only for EZ4 W

This menu allows you to customize parameters relevant to working in WiFi mode.

NAME (SSID)

This is the camera name which will appear. You can change the name using the onscreen keyboard.

SECURITY OPTIONS – NONE

This means there is no password.

SECURITY OPTIONS – WPA2-PSK AES

This allows you to create a password.

PASSWORD

Create a password using the onscreen keyboard. Default password is "leicamicro".

CHANNEL

This allows the WiFi channel to be set automatically or by the user.

APPLY SETTINGS

After making any changes to the WiFi settings, you must go to "APPLY SETTINGS" and press "OK" on the remote to implement the changes.

Pairing Cameras With Remotes

Pairing

The EZ4 E or EZ4 W and the remote control can be paired and then only respond to each other. This can be helpful when using multiple cameras and remote controls.

1. Press the button to start or end the process.

In order to achieve successful pairing and avoid pairing by mistake, the second step must be performed within 4 seconds.

If a "timeout" is displayed after 4 seconds, press the "Pair" button again to start the process.

2. Press and hold the button on your remote you want to define as the pairing button until a corresponding confirmation is displayed on the HD monitor. All of the buttons except the button can be used for this.
3. The microscope only responds to the remote control commands from this remote control.

Resetting to factory setting

1. Press the button to start the process.
2. Press the button WB until a corresponding confirmation is displayed on the HD monitor.

Care, Transport, Contact Persons

Care, Transport, Contact Persons

General Instructions

- Keeping all optical components clean is important for maintaining good optical performance.
- Always protect the microscope and camera with the plastic cover when the instrument is not in use. (Included in the delivery package of the microscope.) Be sure power to the camera is off when the dust cover is in place.
- If any optical surface becomes badly coated with dust or dirt, it should be cleaned by blowing the surface with a syringe or brushing it off with a camel hair brush before attempting to wipe the surface clean.
- Optical surfaces should be cleaned using a lint-free cloth, lens cloth or cotton swab moistened with a commercially available glass cleaner. Do not use alcohol.
- Avoid excessive use of solvents. The lint-free cloth, lens cloth or cotton swab should be soaked with solvent, but not so wet that solvent runs over the lens.
- Protect the microscope from moisture, fumes and acids and from alkaline, caustic and corrosive materials. Do not store chemicals in the vicinity.
- Protect the microscope from oil and grease. Never grease or oil mechanical parts or sliding surfaces.
- It is advisable to enter a service agreement with Leica Service.

Transport

Always use both hands to carry the microscope. There is a handle on the back of the microscope and an undercut in the front for this purpose.

Before transport and storage, always set the zoom to the highest magnification.

Contact address

If your instrument no longer works perfectly, contact your Leica representative. You can find information on worldwide Leica representatives on the Leica website: www.leica-microsystems.com.

Specifications

Due to the technology of the camera, the specifications are changing regularly. Please visit our website www.leica-microsystems.com for the latest brochure downloads to find the up to date specifications.

Specifications

Operating environment

Feature	Specification
Temperature Operating Storage	 +10°C to +40°C (50°F – 104°F) -20°C to +55°C (-4°F – 131°F)
Relative humidity (maximum) Operating/Storage	 10 % to 90 % (noncondensing)
Altitude (maximum) Operating Nonoperating	 0 m to 2,000 m (0 ft to 6,561 ft) 0 m to 10,668 m (0 ft to 35,000 ft)
Pollution Degree Rating	 2
Installation category	II (overvoltage category)
Weight	4.6 kg

Ports and connectors

Feature	Specification
EZ4 E or EZ4 W: USB	one standard USB 2.0 (Typ B)
EZ4 E or EZ4 W: Video	one standard HDMI connector (Typ A)
EZ4 W: Network adapter	one RJ-45 connector
EZ4 E or EZ4 W: Memory card reader	supports up to 32 GB

Ports and connectors (continued)

Feature	Specification
Integrated power supply	100 V – 240 V ~ 50 / 60 Hz Automatic adjustment to local voltage
Power consumption	max. 30 W (EZ4 E or EZ4 W), 15 W (EZ4)

Specifications (Only for EZ4 W)

Feature	Specification
Radio technology	IEEE 802.11n (HT20)
Operating frequency	2,412 – 2,472 MHz (20 MHz)
Transmitted power	31.7 mW /15.0 dBm (20 MHz) e.i.r.p

Dimensions

EZ4 E or EZ4 W Stereomicroscope

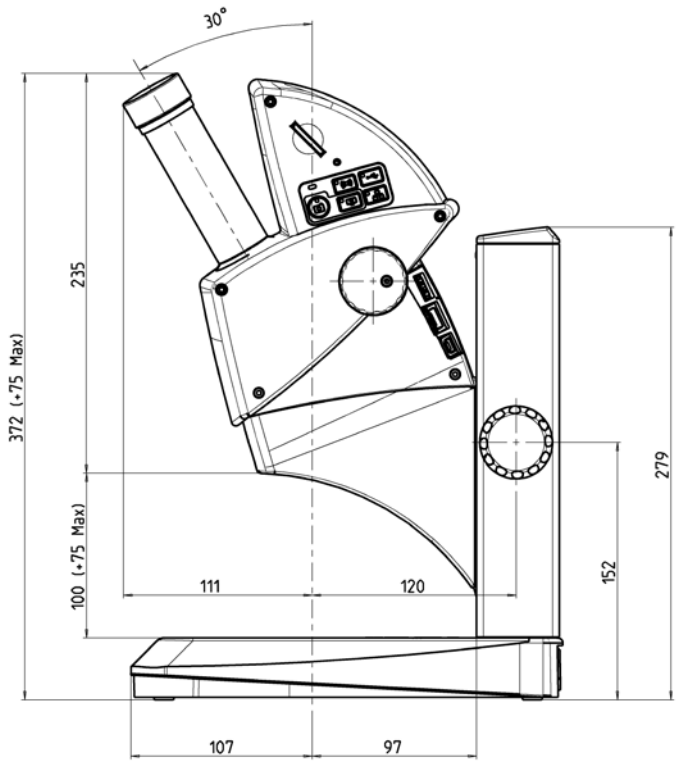

EZ4 E or EZ4 W Stereomicroscope (Continued)

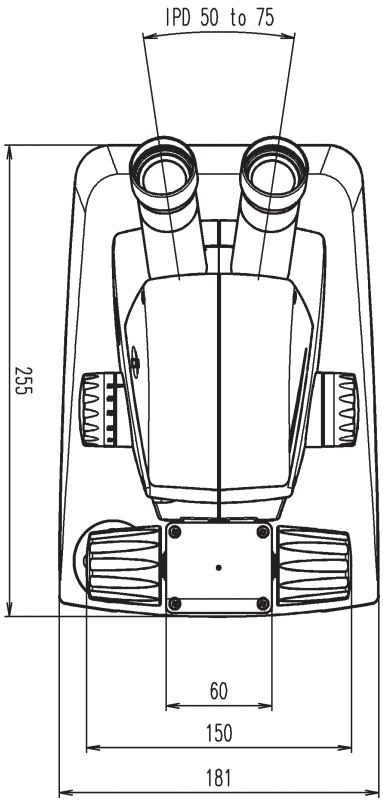

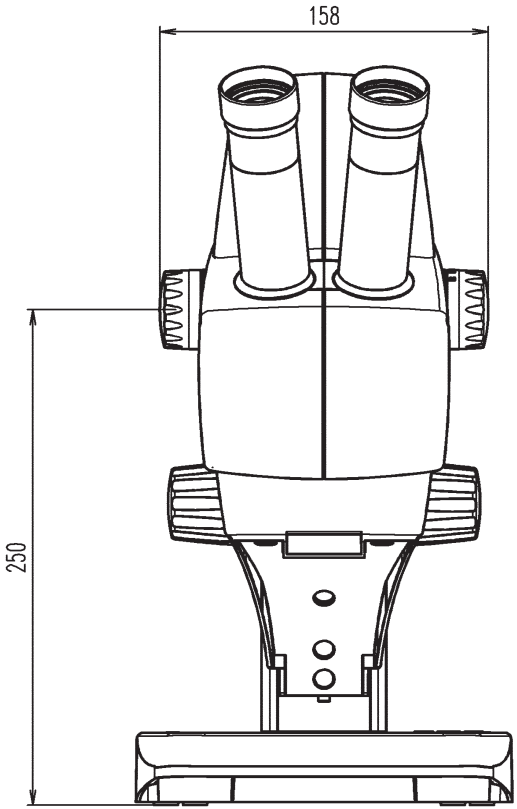

EZ4 Stereomicroscope, 10× Eyepieces

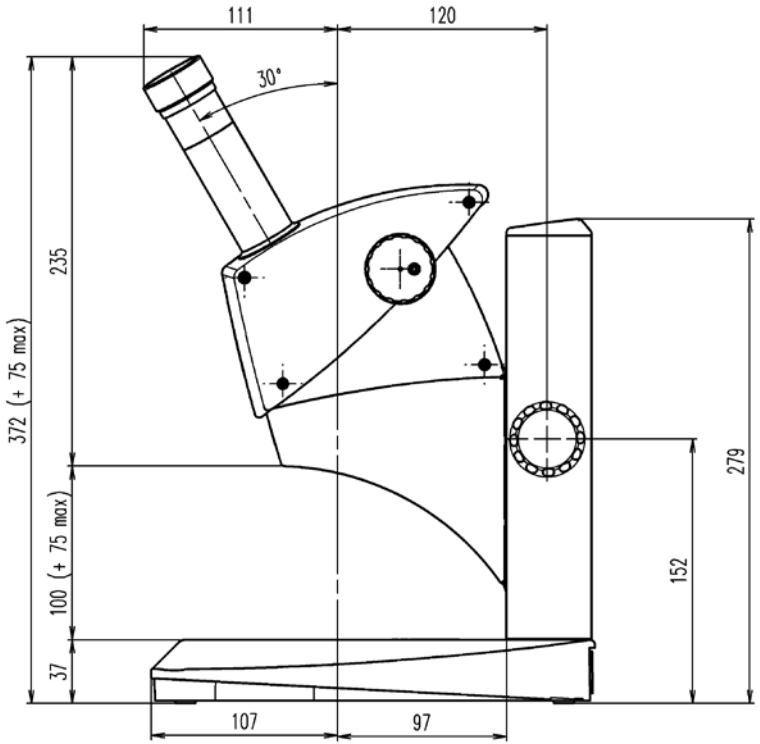

EZ4 Stereomicroscope, 10× Eyepieces (Continued)

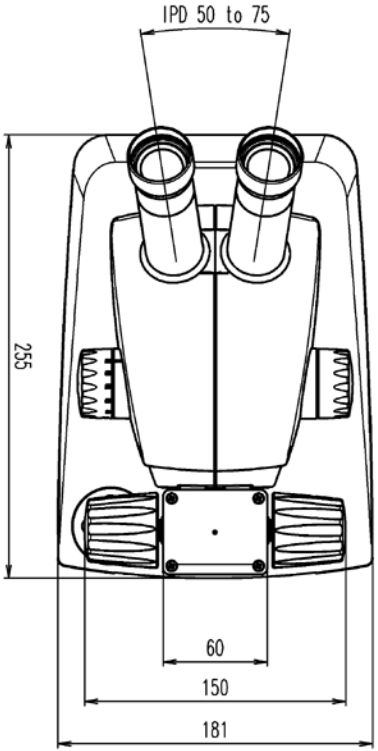

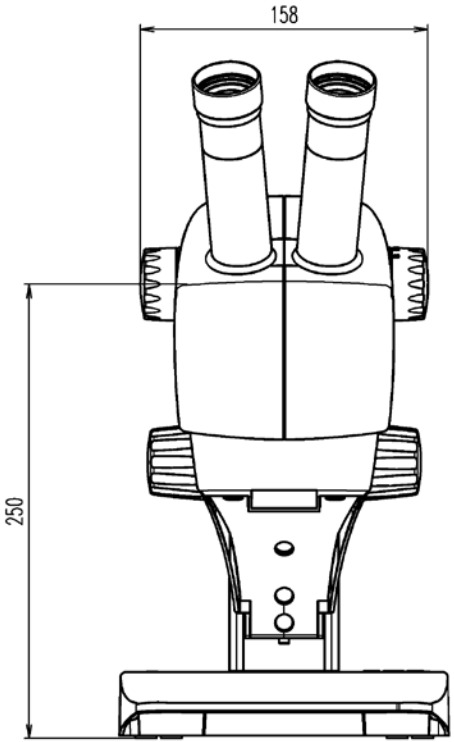

EZ4 Stereomicroscope Without Eyepieces

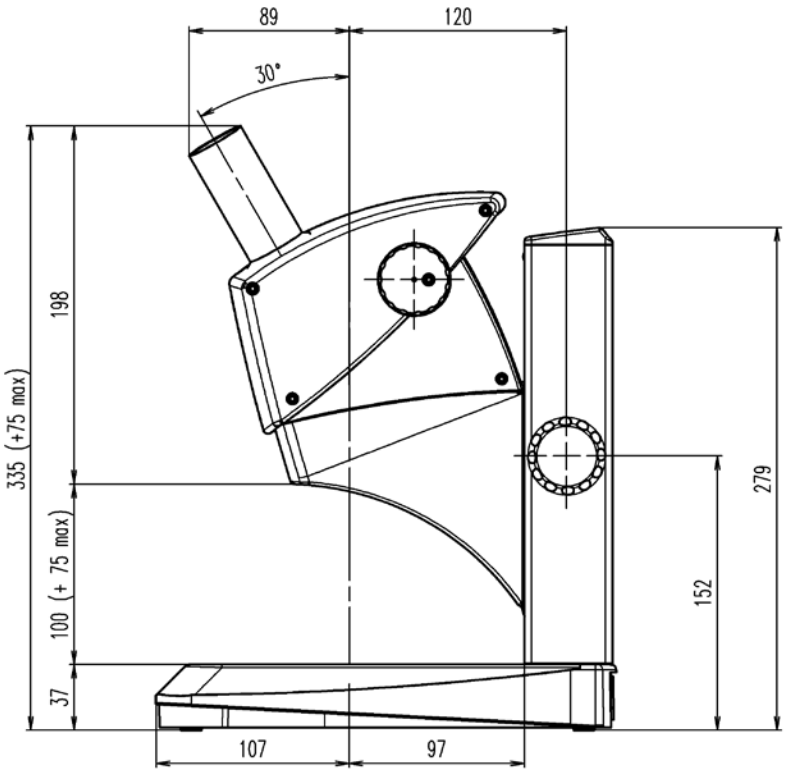

EZ4 Stereomicroscope Without Eyepieces (Continued)

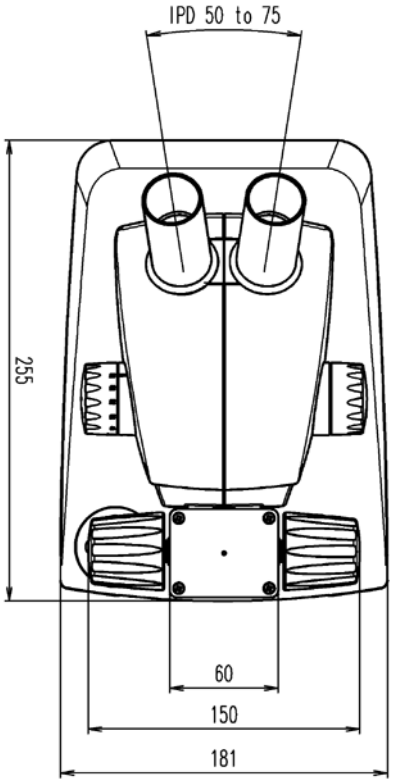

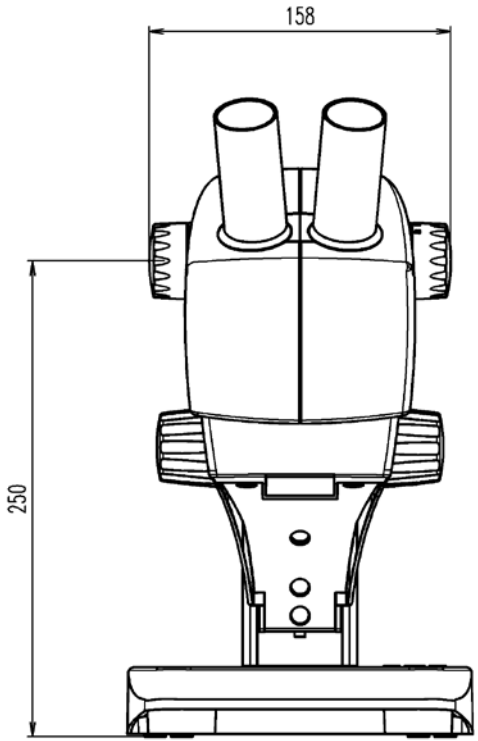

09/2024 · 13IDE10060EN_10 · © 2024 by Leica Microsystems GmbH.
Subject to modifications. LEICA and the Leica Logo are registered trademarks of Leica Microsystems IR GmbH.

Leica MICROSYSTEMS

CONNECT WITH US!

danaher

Leica Microsystems (Schweiz) AG · Max-Schmidheiny-Strasse 201 · CH-9435 Heerbrugg
T +41 71 726 34 34 · F +41 71 726 34 44

www.leica-microsystems.com