广州汇承信息科技有限公司
GUANGZHOU HC INFORMATION TECHNOLOGY CO., LTD

User Manual for HC-42 Bluetooth Serial Port Module

Contents

1. Introduction of Module

1.1 Features……3
1.2 Basic parameters……3
1.3 Electrical features……3
1.4 Products……4

2. Connection Description

2.1 Operating Principle……4
2.2 Connection between the module and other equipment like MCU……4
2.3 Connection between module and mobile phone……5

3. Rapid Testing

3.1 Connection between parameter frame and module……5
3.2 Communication test……5

4. Development and Application

4.1 Definition of pins……6
4.2 Embedding mode……8
4.3 Reference connection circuit……9

5. AT Command

5.1 Module parameters setting-AT command……10
5.2 Command set……10
5.3 Introduction of AT command……11

6. About HC

6.1 Company profile……17

Release Date: June 18, 2018 Version: V2.0

Software Version：HC-42V2.0 2018-06-18
Hardware Version：V1.0 2018-01-12

1. About the Module HC-42

1.1 Features

The HC-42 Bluetooth serial communication module is a new generation of data transmission module based on Bluetooth Specification V5.0 BLE Bluetooth protocol.

Its radio operating frequency band is 2.4GHz ISM, and the modulation methodis GFSK.

The module has a dimension of 26.9mm×13mm×2.0m and integrates stamp hole packaging process. It can be embedded into application system in an easy manner.

1.2 Basic Parameters

Description	Value	Description	Value
Model	HC-42	Dimensions	26.9X13mm
Operating band	2.4G	Air data rate	1Mbps/2Mbps
Operating voltage	1.8~3.6V	Antenna interface	Built-in PCB antenna
Operating current	Refer to Table 1.3	Shutdown current	0.3μA
Communication interface	UART	Receive sensitivity	-96dBm@1Mbps
Communication level	1.8~3.6V, consistent with operating voltage	Operating humidity	10%~90%
Transmission power	-3.5~-1.5dBm	Storage temperature	-40℃~+85℃
Reference range	40m/1Mbps（Bluetooth 5.0）	Operating temperature	-25℃~+75℃

1.3 Electrical features

	Value	Remarks
Voltage	1.8V~3.6V	If button cell is used, the voltage must be above 2.5V.
Reference current (Not include LED)	1.23mA/1.22mA	Full broadcast/full connection
	75μA/65uA	Power broadcast/low power connection (operating current varies with broadcast interval)
	0.3μA	Shutdown

Note: The above-mentioned current data are obtained based on the temperature of 25℃, working voltage of 3.3V, and factory default configuration. There may be errors in actual use.

1.4 Products

Model	Communica -tion protocol	Operating frequency	Communica -tion range	Air data rate	Dimensions	Embedding mode	Features
HC-42	Bluetooth 4.0	2.4G	40m	1Mbps	26.9*13*2mm	SMT	BLE low power consumption
HC-02	Bluetooth 2.0	2.4G	10m	2Mbps	26.9*13*2mm	SMT	Dual-mode Bluetooth
HC-05	Bluetooth 2.0	2.4G	10m	2Mbps	26.9*13*2mm	SMT	Various AT command
HC-06	Bluetooth 2.0	2.4G	10m	2Mbps	26.9*13*2mm	SMT	Simple AT command

2. Connection Description

2.1 Operating Principle

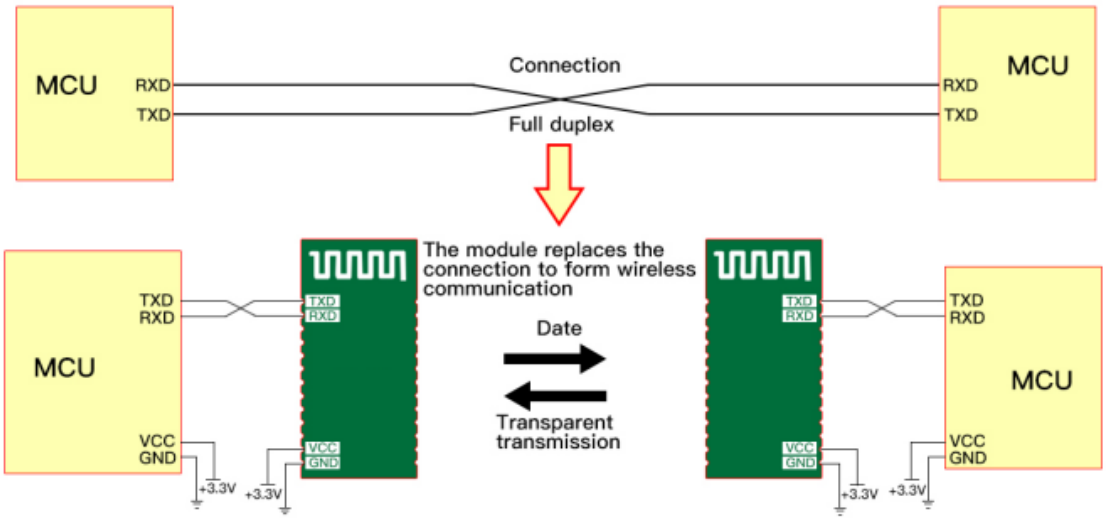

Note:

As shown in the figure above, the HC-42 slaver module is used together with the HC-42 master module to replace the physical connection during full duplex communication. The equipment on the left sends UART data to the module. After receiving UART data, the RXD port of the module automatically sends the data to the air in the form of radio waves. The module on the right can automatically receive the data and restore the UART data originally sent by the left device from the TXD. The same is true from right to left.

2.2 Connection between the module and other equipment like MCU

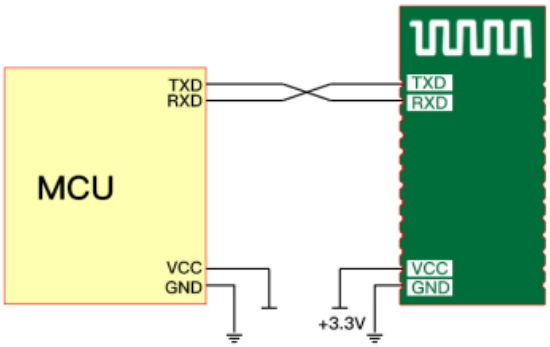

①: When the module is connected to the MCU with the power supply system of 3.3V, the serial ports can be cross - connected. (The RX of the module is connected to the TX of the MCU, and the TX of the module is connected to the RX of the MCU)

②: When the module is connected to an MCU with a power supply system of 5V, a 200Ω~1KΩ resistor can be connected in series to the RX pin end of the module and then to the TX pin of the MCU. The TX pin of the module is directly connected to the RX pin of the MCU, without connection to the resistor in series. (Note: Users are required to confirm that the MCU used recognizes the voltage of about 3.0V as high level, otherwise, a 3.3V/5V level conversion circuit is required.)

Note:

It must be noted that the module can be connected to 3.3V (3.0~3.6V) power supply only, instead of 5V. Direct connecting to 5V will result in damage to module. 5V power supply must be reduced to 3.3V through LDO before powering on the module.

2.3 Connection between module and mobile phone

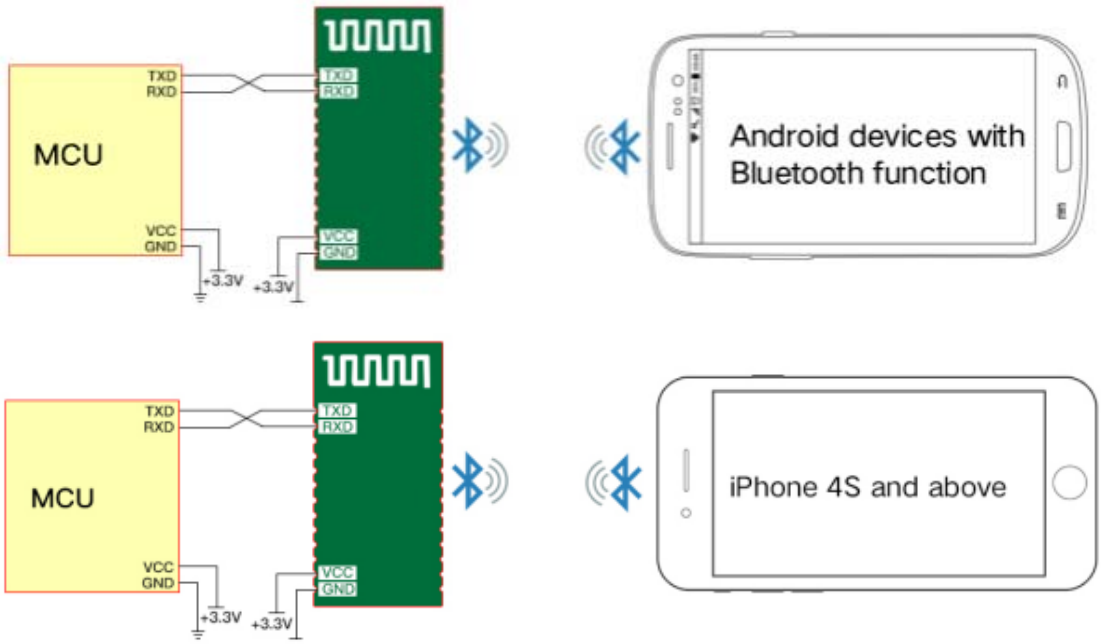

HC-42 supports connection to and communication with handset devices using **Android 4.3 system and above**. Is **BLE Android serial port helper** required for communication test.

HC-42 supports connection to and communication with handset devices using **iPhone 4S system and above.** For communication test, it requires downloading and installing **Lightblue Bluetooth Helper** in APP Store for software connection (other serial port software supporting BLE Bluetooth can also be used).

Module UUID is set forth below:

Search UUID: FFF0 Service UUID: FFE0 Transparent data transmission UUID: FFE1

3. Rapid Testing

3.1 Connection between parameter frame and module

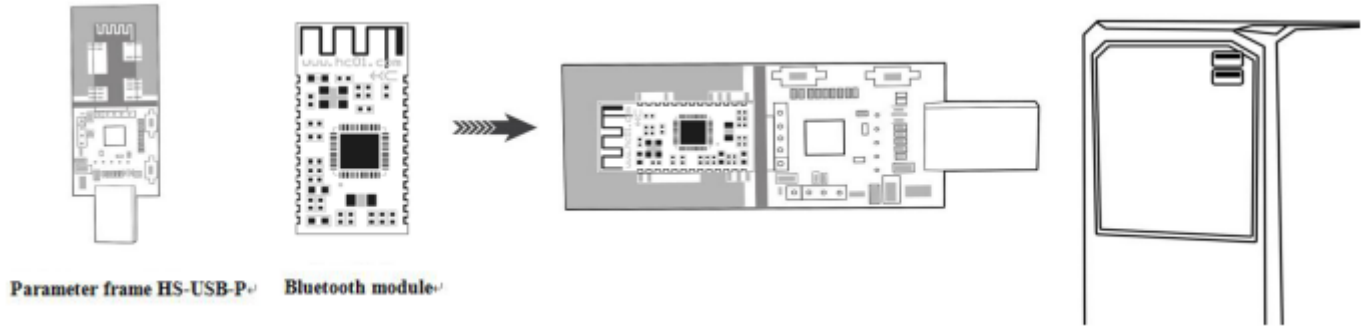

Put the HC-42 Bluetooth module into the HC-USB-P parameter frame, as shown in the figure. The module can be tested by plugging directly into the USB interface of the PC.

3.2 Communication test

Visit HC's official website (http://www.hc01.com) to download HID serial port helper.

① Connect the module with the computer by using the parameter rack, and select the corresponding module model.
② If you have no idea about the baud rate of the module, press the "module baud rate query" button to query the baud rate of the current module, with defaults as 9600.
③ Send AT (or click the test command button in the upper right corner of HID software) and return to OK, which means that the module works normally.
④ Refer to 5.3 for other AT commands.

4. Development and Application

4.1 Dimensions and Definition of PINS

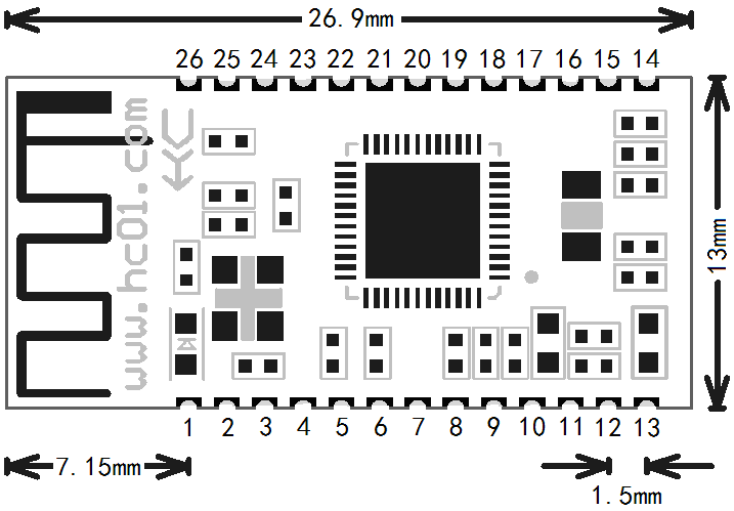

PINS	Definitions	I/O direction	Explanations
1	TXD (P0.06)	O	UART output port, 1.8~3.6V level , consistent with operating voltage
2	RXD (P0.08)	I, pull up	UART input port, 1.8~3.6V level, consistent with operating voltage
3	P0.07		No setting, suspended
4	P0.05		No setting, suspended
5	P0.28	O	Output low level after power on
6	SWDCLK	I	Simulation, programming clock pin, please suspended
7	SWDIO	I/O	Simulation, programming data pin, please suspended
8	P0.29		No setting, suspended
9	P0.30		No setting, suspended
10	P0.31		No setting, suspended
11	RESET	I, pull up	Module reset pin, requiring a low level of not less than 50ms to reset.
12	VCC	I	Power supply pin, requiring power supply of DC 3.3V, power supply current of not less than 50mA
13	GND		Module common ground
14	LEDCON	I	Module on-board indicator LED2 control pin (Note①)
15	P0.12		No setting, suspended
16	LED1 (P0.13)	O	External indication LED output pin (Note②)
17	LINK (P0.14)	O	Connection indication (high level output in disconnected state, low level output after connection)
18	KEY+ (P0.15)	I, pull down	This pin is connected to high level, and the master is used to clear the recorded slaver address.
19	LPIN (P0.16)	I, pull up	Low power control pin, high level means "low Power consumption" and low level means "exit from low power consumption" (Note ③)
20	LPOUT (P0.17)	O	Module Low Power Indicator (Low Level Output in Standard State, High Level Output in Low Power State)
21	P0.18		No setting, suspended
22	P0.19		No setting, suspended
23	P0.20		No setting, suspended
24	P0.22		No setting, suspended
25	P0.23		No setting, suspended
26	P0.11		No setting, suspended

Note①: The Module has an on-board indicator LED2 (near the first pin of the module). The 14-pin LEDCON of the Module is the control pin of the on-board indication LED2.

When the pin is grounded, the Bluetooth indication LED inside the module is turned off. When the foot is suspended, the Bluetooth indication LED is turned on.

If low power consumption is turned on in an application, it is required that the 14-pin of the module shall be suspended to avoid unnecessary current consumption!

Note②: Module indicator lamp output pin, high level output, it can be connected to MCU IO. It is required to connect resistors in series when the Module is connected to LED.

Before connecting, the slaver module LED will light for 1 second every 2 seconds. After the connection, the LED is always on.

Note ③: Input foot, internal pull-up. When the foot is suspended, it is at a high level, and the module can enter a sleep state with low power consumption by using AT+SLEEP command. This pin is connected to low level and can wake up the module. Please refer to the command in the AT+SLEEP command for operations.

4.2 Embedding mode

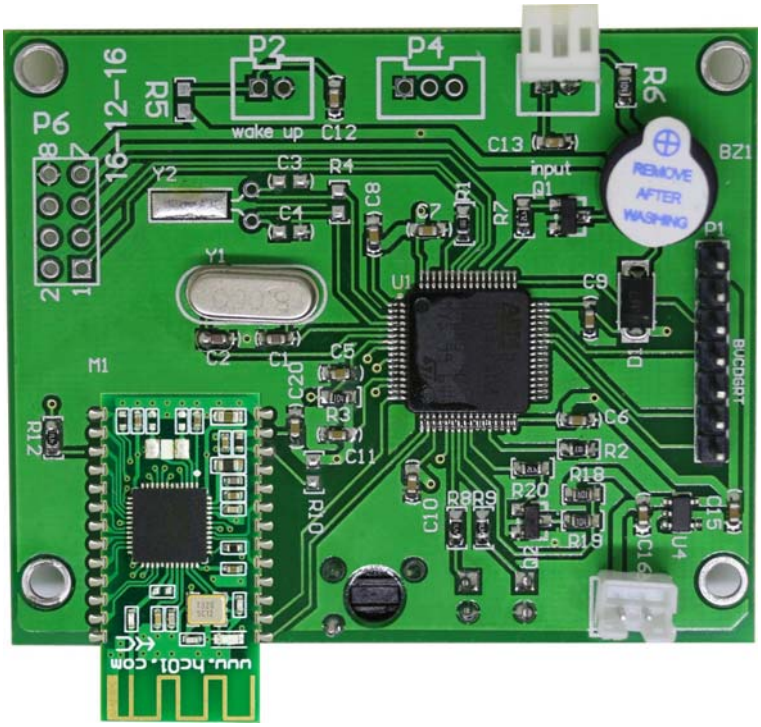

No copper can be applied and no wires can be routed under the antenna part of the module, otherwise the signal will be affected adversely. It is recommended that the bottom plate of the antenna may be hollowed out and the antenna be as close to the board as possible.

Stamp hole packaging mode is used, and the pin is defined as in Section 4.1.

4.3 Reference connection circuit

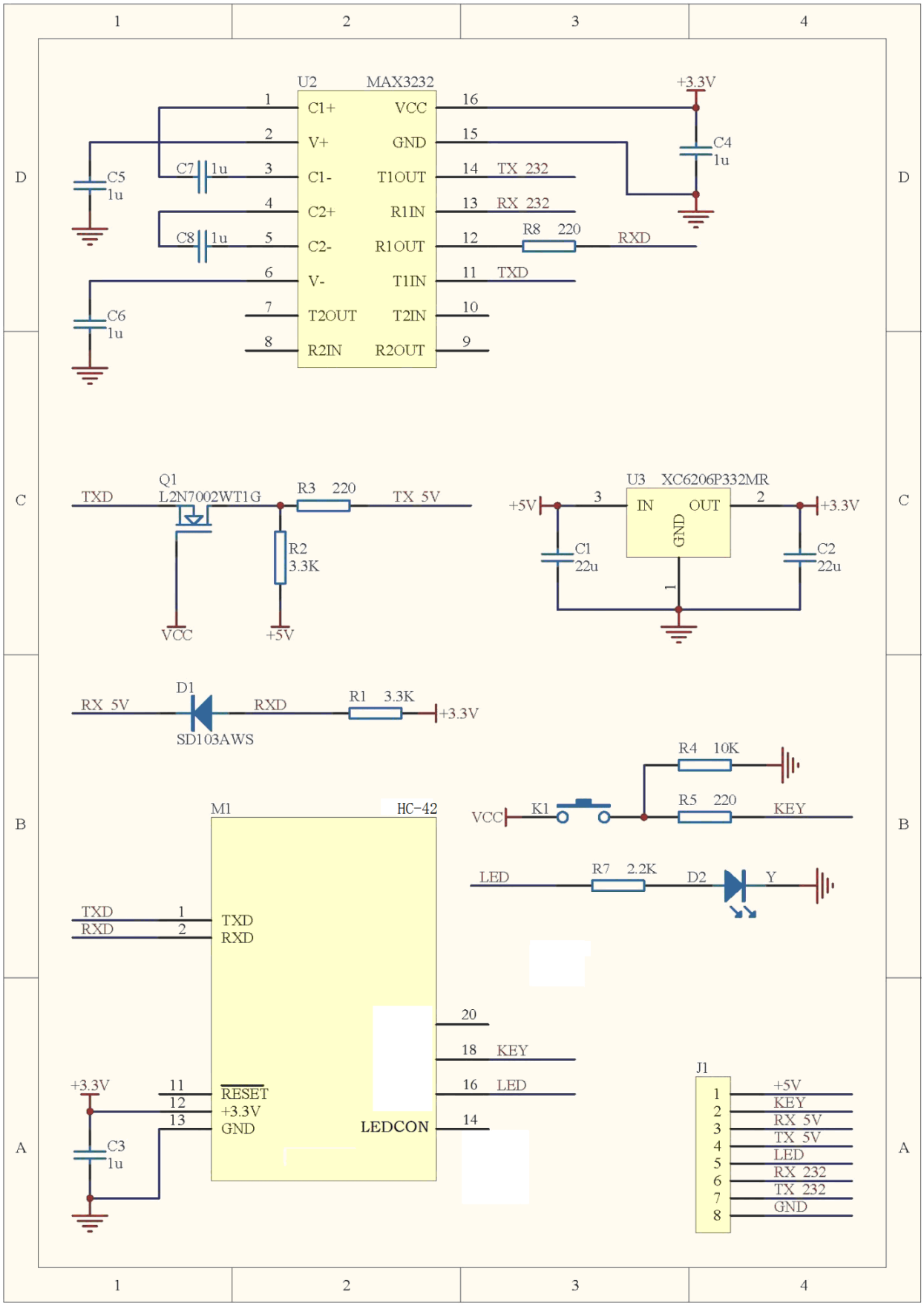

5. AT Command

5.1 Module parameters setting-AT command

1. AT command are used to set the parameters of the module. The module can operate the AT command in the disconnected state and enter the serial port transparent transmission mode after connection.
2. It takes about 300ms for the module to start, so it is better to operate AT command 350ms after the module is powered on or reset. Unless otherwise specified, the parameter setting of AT command will take effect immediately. At the same time, the modification of parameters and functions will not be lost in case of power failure.
3. After the AT command is successfully modified, it will return to OK(except for command of viewing information such as AT+RX and AT+VERSION). If it is unsuccessful, it will not return any information.

5.2 command set

SN	AT command (lower case x means parameters)	Functions	Default status	Remarks
1	AT	Check if the serial port can work normally		
2	AT+VERSION	Check the module version and website address		
3	AT+NAME=xxxx	Check and Modify Bluetooth names	HC-42	
4	AT+RFPM=xx	View and change RF power	0dBm	
5	AT+UART=xxxx	Check and Modify UART baud rate	9600	
6	AT+AINT=xx	Viewing and Changing Broadcast Interval	200mS	
7	AT+PM=x	Check and Modify Module Power Consumption Mode	0	
8	AT+SLEEP	Module into sleep mode		
9	AT+PD	Module in shutdown mode		
10	AT+LEDnM=x	Check and Modify the Operation Mode of LED Indicator		
11	AT+DEFAULT	Restore factory default parameters		
12	AT+ROLE	Check and Modify master-slave mode	S/P	
13	AT+RESET	Reset module		
14	AT+IBEN	iBeacon switch	0（OFF）	
15	AT+IBUUID	Check and modify iBeacon UUID	FDA50693-A4E2-4FB1-AFCF-C6EB07647825	
16	AT+IBRSSI	Check and modify iBeacon RSSI	0xC3	
17	AT+IBMAJ	Check and modify iBeacon Major value	0x27C6	
18	AT+IBMIN	Check and modify iBeacon Minor value	0x8B06	
19				
20				

Note:

No carriage return or line feed is required after AT command; unless otherwise specified, all AT command in this Module will not be sent with line feed.

5.3 Introduction of AT command

5.3.1 Test command

Command	Response	Explanations
AT	OK	Test

5.3.2 Viewing software versions command

Command	Response	Explanation
AT+VERSION	OK+VERSION=HC-42 V2.0.180601 www.hc01.com	Obtain software version and official website address

5.3.3 Inquiring and modifying Bluetooth name command

Command	Response	Explanations	Details
AT+NAME	OK+NAME=HC-42	Inquiring Bluetooth name	Default Bluetooth name: HC-42
AT+NAME=xxxx	OK+NAME=xxxx	Setting Bluetooth name	1. Only 12 characters or less are allowed. 2. This command does not filter any characters. If Chinese characters are required, trans-coding can be conducted according to their own device format. (For example, Android's character format is UTF-8. If you want to search for Chinese names with Android, you must enter them according to UTF-8 encoding.)

Examples:

Send : AT+NAME=www.hc01.com Return: OK+NAME=www.hc01.com

(Set Bluetooth name as www.hc01.com)

Send : AT+NAME Return : OK+NAME=www.hc01.com

(Inquire the Bluetooth name as www.hc01.com)

5.3.4 Inquiring and modifying RF power command

command	Response	Explanations	Details
AT+RFPM	OK+RFPM=4	Inquire RF power of the module	Default RF power: 0dBm
AT+RFPM=xx	OK+RFPM=xx	Set RF power of the module	RF power value with parameters of XX, supports the following power value (unit: dBm): 4, 3, 0, -4, -8, -12, -16, -20, -40

Examples:

Send: AT+RFPM=-4 Return: OK+RFPM=-4 (Set RF power as -4dBm)

Send: AT+RFPM Return：OK+RFPM=-4 (Inquire RF power as -4dBm)

5.3.5 Inquiring and modify UART baud rate command

command	Response	Explanation	Details
AT+UART	OK+UART=9600	Inquire UART baud rate	Default serial-port baud rate: 9600
AT+UART=xxxx	OK+UART=xxxx	Set serial-port baud rate	Parameters xxxx represents baud rate, and supports the setting of the following baud rate:1200,2400,4800,9600,19200, 38400, 57600,115200,230400

Examples:

Send：AT+ UART =19200 Return: OK+UART=19200 (Set serial-port baud rate as 19200)

Send: AT+ UART Return: OK+UART=19200 (Inquire the serial-port baud rate as: 19200)

5.3.6 Inquiring and setting broadcast interval command

command	Response	Explanation	Details
AT+AINT	OK+AINT=200	Inquire broadcast interval	Default broadcast interval: 200mS
AT+AINT=xx	OK+AINT=xx	Set broadcast interval (affecting power consumption in disconnected state)	The parameter xx represents the broadcast interval, with unit being ms, the input range is 20ms-10000ms, being an integer multiple of 10. Default value: 200

Examples:

Send：AT+AINT=1000 Return：OK+AINT=1000 (Set broadcast interval as 1000mS)

Send：AT+AINT Return: OK+AINT=1000 (Inquire broadcast interval as 1000 ms)

5.3.7 Inquiring and setting module power consumption mode command

command	Response	Explanation	Details
AT+PM	OK+PM=0	Inquire power consumption mode	Default power consumption mode: 0
AT+PM=x	OK+PM=x	Set power consumption mode	Parameter xx represents the power consumption mode and supports the following power consumption modes: 0: Power up and run at full speed 1: Power on and turn on low power consumption (equivalent to AT+SLEEP input on power on) Note: After setting up, the module will not work until it is powered on again!

Examples:

Send: AT+PM=1 Return: OK+PM=1 (Modify into power consumption mode 1)

Send: AT+PM Return: OK+PM=1 (Inquire as power consumption mode 1)

Reminder:

In the low power consumption mode, the average operating current of the module is related to the broadcast interval. If the broadcast interval is increased, the operating current will decrease. The table below indicates the average operating current reference values for low power consumption of the module at different broadcast intervals:

Broadcast interval (mS)	**200**	**500**	**1000**	**2000**	**5000**	**10000**
Average operating current (μA)	**70**	**29**	**16**	**11**	**6**	**4.5**

Note:

The parameters said above are measured under the condition that the operating voltage of the module is 3.3V. The measurement error of ±20% caused by the difference of conditions is normal and for reference only. The internal power supply of the module is DC/DC. With the decrease of the working voltage of the module, the operating current of the module will increase correspondingly.

5.3.8 Module enters sleep mode command

command	Response	Explanation	Details
AT+SLEEP	OK+SLEEP	Module enters sleep mode (low power operation)	After the module returns to OK+SLEEP, it enters low power consumption state, the broadcast or connection state will be maintained, and serial communication will be turned off. The transmitting and receiving of data will cause the module exit from sleep state, and the module restart will also cause the module to exit from sleep mode. If the module is required to enter sleep as soon as it is powered on, please send the command AT+PM=1.

Examples:

Send: AT+SLEEP Return: OK+SLEEP

In order to control low power consumption in a quick and human-oriented manner, this module introduces IO to control power consumption. When LPIN (PIN19, input pin) is at high level, it can enter low power consumption operation through AT+SLEEP command, and when LPIN is at low level, it will unconditionally exit from low power consumption operation.

Low power consumption is determined by the command AT+SLEEP and pin LPIN, and its logic relation is as follows:

LPIN (default pull up, high level)	High level	High level	Low level	Low level
AT+SLEEP command	Enter AT+SLEEP	Exit from AT+SLEEP	Enter AT+SLEEP	Exit from AT+SLEEP
Module power consumption state	Lower power consumption	High power consumption	High power consumption	High power consumption

Or in other words: Only when AT+SLEEP and LPIN are both set to low power consumption, the module can be in low power consumption.

Reminder: The interval between entering and exiting from low power consumption is recommended to be greater than 100ms.

5.3.9 Module shutdown command

command	Response	Explanation	Details
AT+PD	OK+PD	Module entering shutdown state	At this time, the operating current of the module is about 0.3μA In this state, the module can only be awakened by pulling down LPIN or RESET, and the module is automatically reset in the wake-up process.

Suggestion: If the module is used under certain power-saving situations, it is suggested that the module can be shut down by AT+PD command without controlling the working power supply of the module, so as to avoid the slow response caused by voltage residue in the mode of cutting off the power supply.

5.3.10 Bluetooth indicating LED operating mode

command	Response	Explanation	Details
AT+LEDnM	OK+LEDnM=2	Inquire operating mode of LEDn	LEDn can be LED1 (external indicator LED) and LED2 (onboard indicator LED)
AT+LEDnM=x	OK+LEDnM=x	Set operating mode of LEDn	Parameter n represents the mode and supports the following modes: 1: OFF 2:Following low power consumption (turn off automatically at low power consumption, and turn on at other times) 3: ON

Examples:

Send: AT+LED1M **Return: OK+LED1M=2 (the operating mode of LED1 is mode 2)**

Send: AT+LED2M=1 **Return: OK+LED2M=1 (set the operating mode of LED2 is mode 1)**

5.3.11 Module parameter restore defaults command

command	Response	Explanation	Details
AT+DEFAULT	OK+DEFAULT	Module parameter recovers default value	Default value of module parameters: Bluetooth name: HC-42 Serial baud rate: 9600bps Broadcast interval: 200mS Power consumption mode: 0 (power-on, full speed operation) Onboard LED 2:1 External indicator led1: 2

5.3.12 Master-slave setting

command	Response	Explanation	Details
AT+ROLE	OK+ROLE=x	Inquire the current role of module	S: Slave (default) P: Peripheral (default) M: Master C: Central S 跟 P 是一样，M 跟 C 也是一样 S Is the same as P, M also same as C.
AT+ROLE=x	OK+ROLE=x	Set the current role of module	S and P are slaves, M and C are masters.

Examples:

Send: AT+ROLE **Return: OK+ROLE=S/P (Inquire the current module as slave)**

Send: AT+ROLE=M **Return: OK+ROLE=M/C (Set the module as master)**

5.3.13 Module reset

command	Response	Explanation	Details
AT+RESET	OK+RESET	Module reset	

Examples:

Send: AT+RESE **Return: OK+RESET**

5.3.14 iBeacon switch

command	Response	Explanation	Details
AT+IBEN	OK+IBEN=x	Inquire status of iBeacon	0 : OFF (default) 1 : ON
AT+IBEN=x	OK+IBEN=x	Set status of iBeacon	

Examples:

Send: AT+IBEN **Return: OK+IBEN=0 (iBeacon disenabled)**

Send: AT+IBEN=1 **Return: OK+IBEN=1(Enable iBeacon)**

5.3.15 iBeacon UUID

command	Response	Explanation	Details
AT+IBUUID	OK+IBUUID=********-****-****-****-**********	Inquire iBeacon UUID	In order to use WeChat's iBeacon function, related registration must be made on WeChat's public platform.
AT+IBUUID=********-****-****-****-**********	OK+IBUUID=********-****-****-****-**********	Set iBeacon UUID	It must be set in strict accordance with the format requirements. Only hexadecimal characters in the range of 0~F and "- " are allowed. The default UUID is as follows: FDA50693-A4E2-4FB1-AFCF-C6EB07647825

Examples:

Send: AT+IBUUID **Return: OK+IBUUID=FDA50693-A4E2-4FB1-AFCF-C6EB07647825**

Send: AT+IBUUID=FDA50693-A4E2-4FB1-AFCF-C6EB07647825

Return: OK+IBUUID=FDA50693-A4E2-4FB1-AFCF-C6EB07647825

5.3.16 Setting of iBeacon RSSI

command	Response	Explanation	Details
AT+IBRSSI	OK+IBRSSI=xx	Inquire Measured RSS value	Default 0xC3
AT+IBRSSI=x	OK+IBRSSI=x	Measured RSS value	Used for iBeacon ranging

*For detailed measurement methods, please refer to relevant data on your own costs.

Examples:

Send: AT+IBRSSI **Return: OK+IBRSSI=C3**

Send: AT+IBRSSI=C8 **Return: OK+IBRSSI=C8**

5.3.17 iBeacon Major value

command	Response	Explanation	Details
AT+IBMAJ	OK+IBMAJ=xxxx	Inquire Major value	Default 0x27C6
AT+IBMAJ=xxxx	OK+IBMAJ=xxxx	Set Major value	Obtain it at WeChat Public Platform after registration

Examples:

Send: AT+IBMAJ **Return: OK+IBMAJ=27C6 (inquire Major value)**

Send: AT+IBMAJ=1234 **Return: AT+IBMAJ=1234 (set Major value)**

5.3.18 iBeacon Minor value

command	Response	Explanation	Details
AT+IBMIN	OK+IBMIN=xxxx	Inquire minor value	Default 0x8B06
AT+IBMIN=xxxx	OK+IBMIN=xxxx	Set Minor value	Obtain it at WeChat Public Platform after registration

Examples:

Send: AT+IBMIN **Return: OK+IBMIN=8B06 (Inquire Minor value)**

Send: AT+IBMIN=1234 **Return: OK+IBMIN=1234 (Set Minor value)**

6. About HC

Guangzhou HC Information Technology Co., Ltd was established in September 2008 and is a pioneer in the field of wireless data transmission. For more than ten years, HC has always adhered to independent research and development and provided wireless data transmission solutions for the majority of technology companies. HC series modules are exported to various countries across the world, and the cumulative sales have reached tens of millions of pieces. With the advantages of stable performance, easy embedding and low packet loss rate, it has been well received by technical experts from all over the world. Among them, the HC-05 and HC-06 Bluetooth serial port modules are the classic works called wireless data transmission products, which have been far ahead in sales for more than ten years, witnessing a market share of more than 40 %. The self-made stamp packaging method has now been widely used by the industry.

In recent years, through continuous innovation, HC has successively developed wireless serial port modules of various working systems, forming four series of serial port products mainly including Bluetooth 2.0, Bluetooth 4.0 BLE, Wireless 433MHz and WIFI, as well as supporting products.

We will not forget our initiative mind, so as to achieve our ultimate goal. HC always sticks to the philosophy of " gathering information and carrying dreams" and do its best to contribute to the wireless data transmission field and society.

[Official Website]: www.hc01.com
[Telephone]: 020-8408-3341 **Official Wechat: hc4008881803**
[Sales customer service]: QQ: 1870976902 QQ: 2716533457
[Technical customer service]: QQ: 445253184 QQ:1614485461 QQ:1004658237

[Address]: Room 608, No.19, Jiangong Road, Tianhe Science Park, Tianhe District, Guangzhou City, Guangdong Province

This Specification remains the property of Guangzhou HC Information Technology Co., Ltd. HC reserves the right to interpret and modify this Specification without notice.

This device complies with Part 15 of the FCC Rules. Operation is subject to the following two conditions: (1) this device may not cause harmful interference, and (2) this device must accept any interference received, including interference that may cause undesired operation.

Changes or modifications to this unit not expressly approved by the party responsible for compliance could void the user's authority to operate the equipment.

NOTE: This equipment has been tested and found to comply with the limits for a Class B digital device, pursuant to Part 15 of the FCC Rules. These limits are designed to provide reasonable protection against harmful interference in a residential installation. This equipment generates, uses and can radiate radio frequency energy and, if not installed and used in accordance with the instructions, may cause harmful interference to radio communications. However, there is no guarantee that interference will not occur in a particular installation. If this equipment does cause harmful interference to radio or television reception, which can be determined by turning the equipment off and on, the user is encouraged to try to correct the interference by one or more of the following measures:

-- Reorient or relocate the receiving antenna.
-- Increase the separation between the equipment and receiver.
-- Connect the equipment into an outlet on a circuit different from that to which the receiver is connected.
-- Consult the dealer or an experienced radio/TV technician for help.

This device and its antenna(s) must not be co-located or operation in conjunction with any other antenna or transmitter.

Radiation Exposure Statement

The device has been evaluated to meet general RF exposure requirement in portable exposure condition without restriction.

Integration instructions for host product manufacturers according to KDB 996369 D03 OEM Manual v01

2.2 List of applicable FCC rules[and ISED Radio Standards Specifications]

CFR 47 FCC PART 15 SUBPART C has been investigated. It is applicable to the modular.

2.3 Specific operational use conditions

This module is stand-alone modular. If the end product will involve the Multiple simultaneously transmitting condition or different operational conditions for a stand-alone modular transmitter in a host, host manufacturer have to consult with module manufacturer for the installation method in end system.

2.4 Limited module procedures

This module is Limited single modular without shielding, host manufacturer have to consult with module manufacturer for the module limiting conditions when integrate the module in the host. module manufacturer should reviews detailed test data or host designs prior to giving the host manufacturer approval.

2.5 Trace antenna designs

Not applicable

2.6 RF exposure considerations

The device has been evaluated to meet general RF exposure requirement in portable exposure condition without restriction.

2.7 Antennas

This radio transmitter FCC ID: 2AEJQHC-42 has been approved by Federal Communications Commission to operate with the antenna types listed below, with the maximum permissible gain indicated. Antenna types not included in this list that have a gain greater than the maximum gain indicated for any type listed are strictly prohibited for use with this device.

Antenna No.	Operate frequency band	Antenna Type	Maximum antenna gain
Antenna 1	2.4GHz – 2.5 GHz	PCB Antenna	0.0 dBi

2.8 Label and compliance information

The final end product must be labeled in a visible area with the following" Contains FCC ID: FCC ID: 2AEJQHC-42”

2.9 Information on test modes and additional testing requirements

Host manufacturer is strongly recommended to confirm compliance with FCC requirements for the transmitter when the module is installed in the host.

2.10 Additional testing, Part 15 Subpart B disclaimer

Host manufacturer is responsible for compliance of the host system with module installed with all other applicable requirements for the system such as Part 15 B.