ZTE
PM790

QUICK REFERENCE GUIDE

DIGITAL VEHICLE-MOUNTED TERMINAL

Legal Information

Copyright © 2015 ZTE Trunking Technology Corporation

All rights reserved.

No part of this publication may be excerpted, reproduced, translated or utilized in any form or by any means, electronic or mechanical, including photocopying and microfilm, without the prior written permission of Trunking Technology Corporation.

The manual is published by Trunking Technology Corporation. We reserve the right to make modifications on print errors or update specifications without prior notice. The information on the package is only for your reference. Images are for your reference only. Please check the product model before purchasing.

Getting to Know Your Device

Device Overview

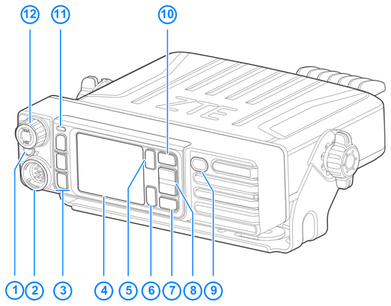

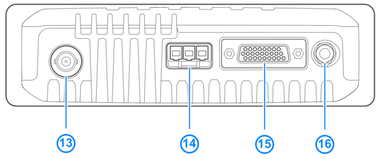

Keys, Interfaces, and Indicators

Front Side

No.	Name	Function
1	**Emergency call key**	Pressing this key launches an emergency call with the current number.
2	**Handheld microphone interface**	Connects to a handheld microphone to make PTT calls.
3	**P1~P3 keys**	Opens a preset function screen directly.
4	**Screen**	Shows the current information of the device.
5	**Back/Delete key**	• Returns to the previous screen. • Deletes what has been input.
6	**Menu/OK key**	• Opens the menu of the device. • Confirms the selection.
7	**Call/Answer key**	Initiate a call or answer an incoming call.
8	**Up/Down navigation key**	Browses and selects an option on the menu.
9	**Power key**	Long-pressing the key to power on/off the device.
10	**Hook key**	Used to end or reject an incoming call.
11	**LED indicators**	Indicates the communication status of the device (for details, see "LED Indicators").
12	**Volume/ Channel knob**	• Used to adjust the volume of the device. • Press and then rotate the knob to select a channel.

Back Side

No.	Name	Function
13	**Antenna interface**	Used to connect an external antenna.
14	**Power interface**	Used to onnect to the power sup.
15	**DB26 accessory interface**	Used to connect to the accessories.
16	**GPS antenna interface**	Used to connect an external GPS antenna.

Programmable keys

In order to improve operation convenience, PM790 has three programmable keys: P1, P2, and P3, each of which can be programmed with functions by the distributors. Current functions of the keys are:

Key	Current Function
P1	Adjusts the transmit power level (low or high).
P2	Enables/disables the silencing function.
P3	Pending.

Status Indication

LCD icons

Icons are shown on the LCD screen to indicate the statuses as follows:

Icon	Description	Icon	Description
	Signal strength		Low power transmission at the current channel
	Unread messages		High power transmission at the current channel
	Inbox space is full		Alert tone silent
	The device is in scanning status (not shown in background scanning)		Interphone silent
	The device is in roaming status		GPS in working status
	Incoming call		In a call
	Missed call(s)		

LED Indicators

LED indicators show the operation status of the device.

Indicator Status	Device Status
Solid on in green	Data being received.
Solid on in red	Data being transmitted.
Flashing quickly in orange	Scanning in progress.
Solid on in orange	After a call is set up successfully, there is no voice call being transmitted or received in the traffic channel and now you can hold the PTT key on the handheld microphone to speak.

Basic Operations

Power On/Off

Hold the **Power** key to power on/off the device.

Adjust the Volume

After the device is powered on, rotate the **Volume/Channel** knob clockwise to increase the volume or anti-clockwise to decrease the volume.

Connect a Handheld Microphone

Note:

The handheld microphone is an important accessory for PM790. A PTT call can be made only after a handheld microphone is connected.

You can use the handheld microphone to perform the following operations.

- Browse the function menu of the PM790, select a function and make settings.
- Input a private or group call number.
- Initiate, answer and hang up a PTT call.

Parts and respective functions of the handheld microphone are as follows:

Part Name	Function Description
P1~P3 keys	Same functions as the relevant keys of PM790.
Call/Answer key	
Hook key	
Return key	
Up/Down key	
Emergency call key	
OK key	Same functions as the **Menu/OK** key of PM790.
Dial-up keypad	Including **Number/Letter** keys, ***** key and **#** key, all for dialing up a number.
PTT key	Used to initiate PTT calls.

Select a Cluster

You can put group contacts into a cluster to manage the contacts efficiently. The device supports 64 clusters, each of which can contain 16 group contacts.

You can select a cluster by the following two ways:

- Menu

Press the **Menu/OK** key to open the main menu. Press the **Up/Down** button to select a cluster. After the selected group is opened, set it to "Default" and then press the **OK** key to switch to the selected cluster.

- Shortcut

In the standby interface, press the group call management key to open the cluster menu. Repeat the steps as described above.

Note:

One cluster list is set by factory default. This list contains 64 clusters.

Select a Group Call Contact

You can select a group call contact in the following ways after successful startup and registration:

- Knob

Rotate the **Group call select** knob to select the contact for a group call. If no group call contact can be selected, an alert (with alert tone) of empty group will be given.

- Menu

Press the **Menu/OK** key to open the main menu. Select **Cluster** and then press the **Up/Down** key to select a group. Select **Member** and then press the **OK** key to enter the group call list corresponding to the selected cluster. Press the **Up/Down** key to select needed group call contact.

- Shortcut

If the distributor has set a shortcut key for the current group call contact, you can press this key to enter the group call list menu corresponding to the current cluster and then press the **Up/Down** key to select the needed group call contact.

Call

For the answering interphone to have the best volume, it is recommended to keep your mouth about 2.5~5 cm away from the microphone.

Private Call

Initiate a Private Call

You can initiate a private call by the following ways. While waiting for the called party to answer the call, the terminal will give a ring-tone alert.

- Use **Contact** or **Call Logs** to initiate a call.

1. Press the **Menu** key to enter the main menu.
2. Select **Contacts** > **Contact**, or select **Call Logs** to enter the Outgoing/Incoming/Missed call list.
3. Press the **Up/Down** key to select the desired private call contact.
4. Press the **PTT** key on the handheld microphone to initiate the call.

- Manually dial up to initiate a call.

1. In the standby interface, use the dial-up keypad on the handheld microphone to input the needed private call number.
2. Press the **Call** key or handheld microphone **PTT** key or the **#** key to initiate the call.

- Use the Missed call list to initiate a private call.

A missed private call can be initiated by pressing the **Call** key or handheld microphone **PTT** key in the alert interface.

Note:

No call can be initiated if the device is not registered or the registration fails.

Answer a Private Call

A ringing alert is given and the LCD icon is shown when the device receives a private call. The call is then established if you press the **Answer** key or handheld microphone **PTT** key within a preset time. The LCD icon is shown and an alert tone is given after the call is established successfully. If the call is not answered within the preset time, the missed call icon is shown.

Terminate a Private Call

If you want to end a call, press the **Hook** key.

Note:

Both the calling and called parties can terminate a private call.

Group Call

Initiate a Group Call

A group call can be initiated by one of the following ways:

- Initiate a call to the preset contact

In the standby interface, press the handheld microphone **PTT** key to initiate a group call to the group call contact selected by rotating the Group call select knob.

- Initiate a call to a group call contact

1. In the standby interface, press the **Menu** key to enter the main menu and select a cluster. Or press the Group call manage key to enter the cluster list.
2. Select **Cluster X** > **Member**.
3. Press the **Up/Down** key to select the desired group call contact.
4. Press the **Call** key or handheld microphone **PTT** key to initiate the call.

- Manually dial up

1. In the standby interface, use the handheld microphone dial-up keypad to input the needed group call number.
2. Press the **#** key to switch to the group call.
3. Press the **Call** key or handheld microphone **PTT** key or the **#** key to initiate the call.

Answer a Group Call

After the device receives a group call, the call is automatically established without the need of pressing any keys. The LCD icon is shown and an alert tone is given after the call is established successfully.

Late Access

After a group call is established, a member in the group can access the call later in the call process.

Terminate a Group Call

Press the **Hook** key to terminate a group call.

Note:

Only the calling party can terminate a group call.

Emergency Call

Note:

An emergency call has the top priority, yet the device needs to be authorized first to make emergency calls.

You can initiate an emergency call by the following way:

1. Input a desired emergency call number.
2. Press the **#** button to switch between Private call/Group call.
3. Press the **Emergency Call** key or handheld microphone **PTT** key or the **#** key to initiate an emergency call.

You can also bind a one-button call or a long-press number button to initiate an emergency call.

Device Menu

Cluster

You can view the current cluster information.

Call Logs

You can view the Outgoing/Incoming/Missed calls, or clear the call logs.

Contacts

You can view the contact list or add a new contact.

Zone

You can view the zone list and switch zones.

Work Mode

You can switch among three work modes: conventional, PDT Trunking, and MTP Trunking.

Accessories

You can view and set accessories such as the positioning system.

Settings

Power Level

You can set the power level as low or high.

Radio Settings

- **Language:** Set the language of the device.
- **Backlight:** Can be set to Off, Infinite, and Timer.
- **Brightness:** Adjust the brightness of the screen.
- **LED indication:** Can be set to enable or disable.
- **Alert Tone**

  You can turn on/off the radio silent, set the tone volume, and set the alert tones for operations including the keypad, private call, group call, and power on/off.
- **Alias Display:** Two options are Alias and ID.
- **Encrypt:** You can enable or disable this function.
- **Date:** Set the date of the device.
- **Time:** Set the time of the device.

Device Info

The device information is shown.

Learning More

To learn about more information about your PM790, visit the website *http://www.ztegota.com.cn*.

For security information, refer to the user manual of PM790.

RF Energy Exposure Information

RF Energy Exposure Awareness And Control

Information For Fcc Occupational Use Requirements

I before using the DIGITAL MOBILE RADIO, review the following important RF energy awareness and control information and operational instructions. Comply with this information and instructions in order to ensure compliance with RF exposure guidelines.e the capability to access information in that form.

WARNING

This radio is intended for use in occupational/controlled conditions, where users have full knowledge of their exposure and can exercise control over their exposure to remain below RF exposure limits. This radio is NOT authorized for general population, consumer, or any other use.

Changes or modifications not expressly approved by ZTE TRUNKING TECHNOLOGY CORPORATION could void the user's authority to operate the equipment.

This two-way radio uses electromagnetic energy in the radio frequency (RF) spectrum to provide communications between two or more users over a distance. It uses RF energy or radio waves to send and receive calls. RF energy is one form of electromagnetic energy. Other forms include, but are not limited to, electric power, sunlight, and x-rays. RF energy, however, should not be confused with these other forms of electromagnetic energy, which, when used improperly, can cause biological damage. Very high levels of x-rays, for example, can damage tissues and genetic material.Experts in science, engineering, medicine, health, and industry work with organizations to develop standards for exposure to RF energy.These standards provide recommended levels of RF exposure for both workers and the general public. These recommended RF exposure levels include substantial margins of protection. All two-way radios marketed in North America are designed, manufactured, and tested to ensure they meet government-established RF exposure levels. In addition, manufacturers also recommend specific operating instructions to users of two-way radios. These instructions are important because they inform users about RF energy exposure and provide simple procedures on how to control it. Refer to the following websites for more information on what RF energy exposure is and how to control exposure to assure compliance with established RF exposure limits:

http://www.fcc.gov/oet/rfsafety/rf-faqs.html

http://www.osha.gov./SLTC/radiofrequencyradiation/index.html

Federal Communications Commission Regulations

Before it was marketed in the United States, the Digital portable radio was tested to ensure compliance with FCC RF energy exposure limits for two-way portable radios. When two-way radios are used as a consequence of employment, the FCC requires users to be fully aware of and able to control their exposure to meet occupational requirements. Exposure awareness can be facilitated by the use of a label directing users to specific user awareness information. The radio has an RF exposure product label.Also, the Product Safety Manual and this Operator’s Manual include information and operating instructions required to control RF exposure and to satisfy compliance requirements.

Operation Safety Recommendations

Occupational Safety Guidelines And Safety Training Information

To ensure bodily exposure to RF electromagnetic energy is within the FCC allowable limits for occupational use. Always adhere to the following basic guidelines:

• The push-to-talk button should only be depressed when intending to send a voice message.

• The radio should only be used for necessary work-related communications.

• The radio should only be used by authorized and trained personnel. It should never be operated by children.

• Do not attempt any unauthorized modification to the radio. Changes or modifications to the radio may cause harmful interference and/or cause it to exceed FCC RF exposure limits. Only qualified personnel should service the radio.

• Always use only authorized accessories (antennas, control heads, speakers/mics, etc.). Use of unauthorized accessories can cause the FCC RF exposure compliance requirements to be exceeded.

The information listed above provides the user with information needed to make him or her aware of a RF exposure, and what to do to assure that this radio operates within the FCC exposure limits of this radio.

This device complies with part 15 of the FCC Rules. Operation is subject to the condition that this device does not cause harmful interference.

This device complies with part 15 of the FCC rules and industry Canada license-exempt RSS standard(s). Operation is subject to the following two conditions: (1) this device may not cause harmful interference, and (2) this device must accept any interference received, including interference that may cause undesired operation.

Operational Instructions and Training Guidelines

To ensure optimal performance and compliance with the occupational/controlled environment RF energy exposure limits in the above standards and guidelines, users should transmit not more than 50% of the time and always adhere to the following procedures:

- Antenna gain must not exceed 3.5dBi.
- The antenna must be installed complying with the requirements of manufacturer or supplier, and it must be at least 0.6 meters away from human body.
- The radio product is mobile station.

Antenna	Safe Distance, R_{safe}, (cm)
	FCC Part 2.1091
	Controlled RF Exposure
TQC-400BII(400MHz-410MHz/G:3.5dBi) TQC-400FC(400MHz-420MHz/G:3.5dBi) TQC-400FC(420MHz-440MHz/G:3.5dBi) TQC-400FC(440MHz-460MHz/G:3.5dBi) TQC-400FC(450MHz-470MHz/G:3.5dBi)	60

Technical Parameters:

Frequency Range:400MHz to 470MHz；

RF Output Power: High Power:45W, Mid Power: 25W, Low Power: 5W；

Modulation Type:

Analog Voice: FM, Digital Data: 4FSK;

Channel Separation: Analog : 12.5kHz, Digital : 12.5kHz;

FCC Statement:

This device complies with Part 15 of the FCC Rules. Operation is subject to the following two conditions:

(1) This device may not cause harmful interference, and

(2) this device must accept any interference received, including interference that may cause undesired operation.

NOTE 1: This equipment has been tested and found to comply with the limits for a Class B digital device, pursuant to part 15 of the FCC Rules. These limits are designed to provide reasonable protection against harmful interference in a residential installation. This equipment generates, uses and can radiate radio frequency energy and, if not installed and used in accordance with the instructions, may cause harmful interference to radio communications. However, there is no guarantee that interference will not occur in a particular installation. If this equipment does cause harmful interference to radio or television reception, which can be determined by turning the equipment off and on, the user is encouraged to try to correct the interference by one or more of the following measures:

- Reorient or relocate the receiving antenna.
- Increase the separation between the equipment and receiver.
-Connect the equipment into an outlet on a circuit different from that to which the receiver is connected.
-Consult the dealer or an experienced radio/TV technician for help.

NOTE 2: Any changes or modifications to this unit not expressly approved by the party responsible for compliance could void the user's authority to operate the equipment.