KISTLER
measure. analyze. innovate.

Instruction Manual

KiTorq Rotor Torque Measuring Unit
Type 4550A...

CE

Part 4
002-566-4e-02.14

Foreword

This instruction manual applies to the Type 4550A... KiTorq Rotor torque measuring unit.

Keep this instruction manual for future reference. It should be available at the point of use.

Information in this assembly manual is subject to change at any time, without notice. Kistler reserves the right to improve and modify its products in the course of technical advancement, without any obligation to inform any persons or organizations of such changes.

Original language of this Instruction Manual: German

©2011 … 2015 Kistler Group. All rights reserved.

Kistler Group
Eulachstrasse 22
8408 Winterthur
Switzerland
phone +41 52 224 11 11
fax +41 52 224 14 14
info@kistler.com
www.kistler.com

Manufacturing company
Torque sensors, NC joining modules, load-displacement monitors, test bench systems

Kistler Lorch GmbH
Maierhofstrasse 35
73547 Lorch
Germany
phone +49 7172 184 0
fax +49 7172 184 400
info.klr@kistler.com

Contents

1. Introduction ... 3

1.1 FCC Compliance Statement ... 4

2. Important Notes ... 5

2.1 For your Safety ... 5
2.2 Electromagnetic Compatibility (EMC) ... 5
2.3 Tips for Using this Assembly Manual ... 6
2.4 Note on the Disposal of Electronic Devices ... 6

3. Typical Propertiestorque Measuring Unit ... 7

4. Brief Instructions for Commissioning ... 8

4.1 Mechanical Setup ... 8
4.1.1 Mounting the Torque Measuring Unit on the Counterflange ... 9
4.1.2 Alignment of the Type 4550A... Torque Measuring Unit (Rotor) and the Type 4541A... (for Example) Torque Evaluation Unit (Stator) ... 10
4.1.3 Application Examples ... 11

5. Mechanical Basic Data ... 12

5.1 Technical Data ... 12

6. Dimensions of the Torque Measuring Unit ... 13

7. General Technical Data ... 14

8. Ordering Key for the Rotor and Calibration Codes ... 14

9. Standard Calibration and Special Calibration ... 15

10. Declaration of Conformity ... 16

11. Index ... 17

Total pages 17

1. Introduction

Thank you for choosing a quality product from Kistler. Please read this instruction manual carefully, so that you can put the many properties of your product to optimal use.

Kistler declines any liability, to the extent permissible by law, if action is taken contrary to this instruction manual, or other products are used than those listed as accessories.

Kistler provides a wide range of metrology products and overall solutions:

- Piezoelectric sensors for measuring pressure, force, torque, strain, acceleration, shock, and vibration
- Strain gage sensor systems for measuring force and torque
- Piezoresistive pressure sensors and transmitters, with corresponding measuring amplifiers
- Corresponding measuring amplifiers (charge amplifiers, piezoresistive amplifiers, etc.), display units, and charge calibrators
- Electronic control, monitoring, and evaluation units, and application-specific metrological software
- Data transmission modules (telemetry)
- Electromechanical NC joining modules and load-displacement monitors
- Test bench systems for electric motors and gears in the lab, in production, and for quality assurance

Kistler also develops concepts for entire measurement systems for special uses, such as in the automotive industry, plastic processing, and biomechanics.

Our full catalog provides an overview of our product line. Detailed data sheets area available for practically all of our products.

For assistance with any special questions remaining after studying these instructions, Kistler customer service is available around the world with expert advice for application-specific problems.

1.1 FCC Compliance Statement

This device complies with Industry Canada licence-exempt RSS standard(s) and part 15 of the FCC Rules. Operation is subject to the following two conditions:

(1) this device may not cause interference, and (2) this device must accept any interference, including interference that may cause undesired operation of the device.

Changes or modifications not expressly approved by the party responsible for compliance could void the user's authority to operate the equipment.

2. Important Notes

Please be sure to observe the following notes; this is for your personal safety when working with the Type 4550A... torque measuring unit (rotor), and ensures long, trouble-free operation.

2.1 For your Safety

The torque measuring unit left the factory in error free condition with respect to safety. In order to maintain this condition, and ensure hazard-free operation, follow the notes and warnings in this instruction manual and on the unit.

Follow all local safety laws and regulations governing the use of electrical and electronic devices.

If it can be assumed that hazard-free operation of the torque measuring unit is no longer possible, then remove it from operation and secure it against unintended use.

Hazard-free operation is no longer possible

- if the measuring unit has visible damage.
- if the measuring unit no longer functions correctly.
- after a long storage period under unfavorable conditions.
- after severe shipping stress.

If hazard-free operation can no longer be ensured, due to one of the above conditions, then the torque measuring unit must be shipped to the responsible Kistler sales office or representative immediately for repair.

2.2 Electromagnetic Compatibility (EMC)

The Type 4550A… KiTorq Rotor torque measuring unit is designed to conform to CE and meets all technical safety requirements with respect to electromagnetic compatibility according to EN 61000-6-2 (interference resistance) and EN 61000-6-4 (industrial interference resistance).

2.3 Tips for Using this Assembly Manual

NOTE	Report any shipping damage immediately to the freight carrier and to Kistler Lorch GmbH.

NOTE	We recommend reading the entire instruction manual thoroughly. Keep this instruction manual in a safe location, where it is always accessible. If the manual is lost, please contact the responsible Kistler sales office or representative, and ask for a replacement.

NOTE	Modifications to the device (alterations, upgrades, etc.) generally also lead to changes in the assembly manual. In this case, contact the responsible Kistler sales office or representative about ways to update your documentation.

2.4 Note on the Disposal of Electronic Devices

Waste electronic equipment may not be disposed of in household trash or residual waste. Please bring the unserviceable device to the nearest electronic disposal site, or contact your Kistler sales office.

3. Typical Propertiestorque Measuring Unit

- Combinations of various rotors and stators
- Transmission without contact
- High precision
- Highly dynamic
- Connection dimensions per DIN ISO 7646 (gear flange)

4. Brief Instructions for Commissioning

The following describes how the Type 4550A… KiTorq Rotor torque measuring unit and the Type 454xA... KiTorq Stator torque evaluation unit can be mechanically installed and commissioned.

4.1 Mechanical Setup

The typical setup, with one torque measuring unit and one evaluation unit, can be seen in the assembly examples. As a rule, the measuring unit is connected directly to the drive. The device under test is mounted on the measuring side, using a coupling. Suitable couplings are available from Kistler (torsionally rigid multi-disc coupling, Type 2305A…, coupling upon request).
The Type 4550A... torque measuring unit is intended to be mounted directly on one side on a supported shaft. Because very high transverse loads can arise with even a slight offset of the axes, the measuring unit must always have a compensation coupling or articulated shaft on the measurement side.

In general:

- The system must have burst protection that conforms to applicable directives and laws.
- It is recommended that the critical torsional and bending speeds be calculated for the drivetrain. These speeds should be avoided during operation. For safe operation of the system, it is recommended that the speed be held at about 30 % above or below the critical speeds.
- After installation, the system should be operationally balanced per DIN 2060, based on the speed.
- Machine vibrations should be checked per VDI 2056.

4.1.1 Mounting the Torque Measuring Unit on the Counterflange

When tightening the screws on the Type 4550A... torque measuring unit (rotor), care must be taken to ensure that the screws are tightened to the appropriate torque. The sequence of tightening should always have screws in opposite locations tightened in order. The minimum and maximum thread-in depth must be observed in all cases. There are also requirements for the flatness and runout of the counterflange. The mechanical requirements are summarized in the following table:

Rotor screw connection/mounting screws

Nominal torque M_{nom}	N·m	**100/ 200**	**500/ 1 000**	**2 000/ 3 000**	**5 000**
Thread		M8	M10	M12	M14
Property class		10.9	10.9	10.9	12.9
Minimum mounting depth	mm	10	10	12	14
Maximum mounting depth[1)]	mm	16	16	19	19
Fastening torque M_A	N·m	34	70	123	220
Counterflange flatness	mm	0,01	0,01	0,01	0,01
Counterflange concentricity	mm	0,02	0,02	0,02	0,02
Maximum axial displacement Rotor → Stator	mm	±1	±1	±1	±1
Air gap (target dimension)	mm	1 ±0,5	1 ±0,5	1 ±0,5	1 ±0,5

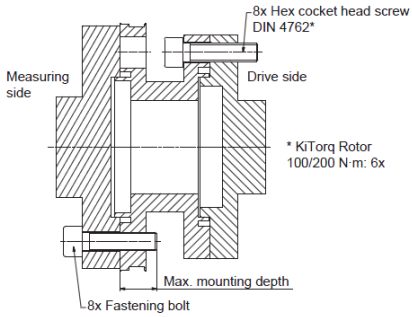

[1)] **Important: The maximum mounting depth must never be exceeded!**

The thread-in depth must be observed!

The zero point can shift by up to 3 % during installation. If this value is exceeded, the installation should be checked.

4.1.2 Alignment of the Type 4550A... Torque Measuring Unit (Rotor) and the Type 4541A... (for Example) Torque Evaluation Unit (Stator)

The inside edge of the measuring unit (measuring side) must be located within the white line on the evaluation unit. The serial numbers (SN) of the torque measuring unit (rotor) and the torque evaluation unit (stator) must be located on the same side.

- The axial tolerance is ±1 mm
- The center axes of the rotor and stator must be in line
- The air gap is 1 mm ±0,5

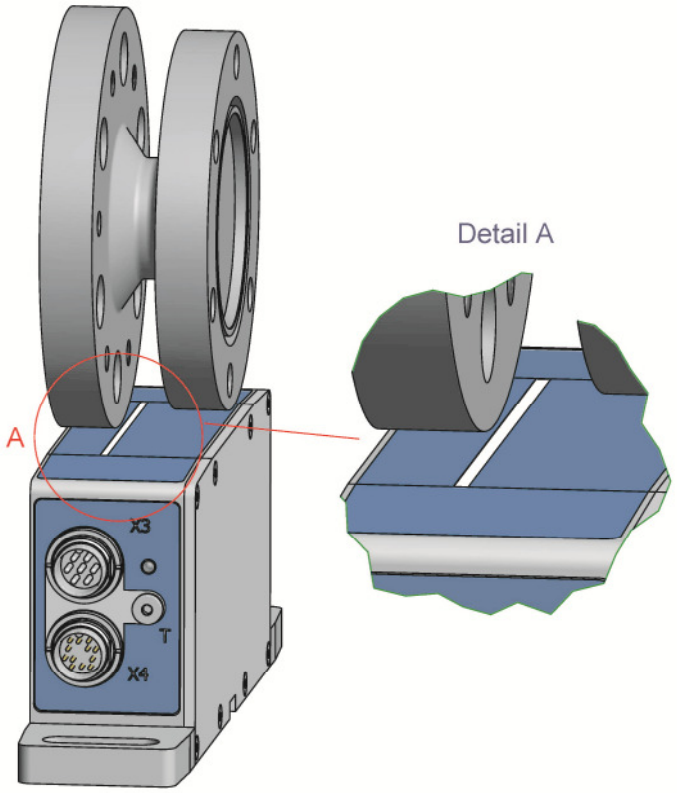

Figure 1: Alignment of the rotor and stator

4.1.3 Application Examples

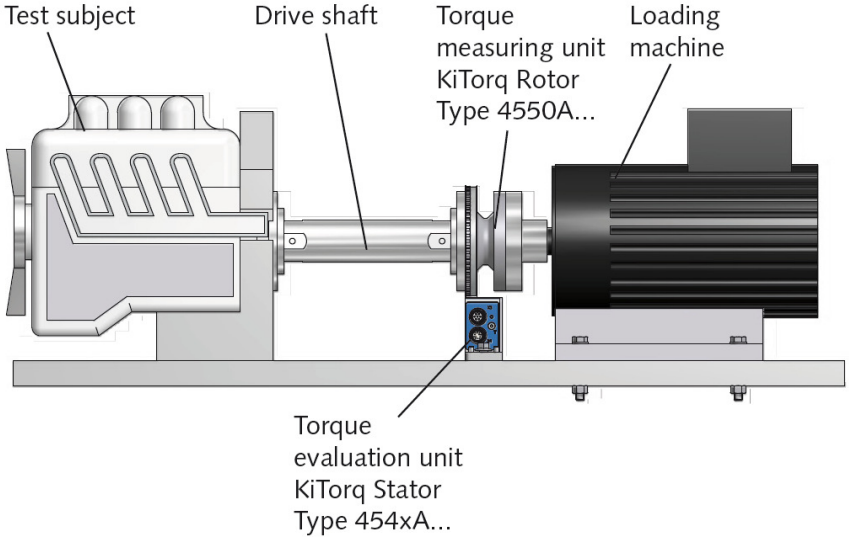

Figure 2: Combustion engine test stand

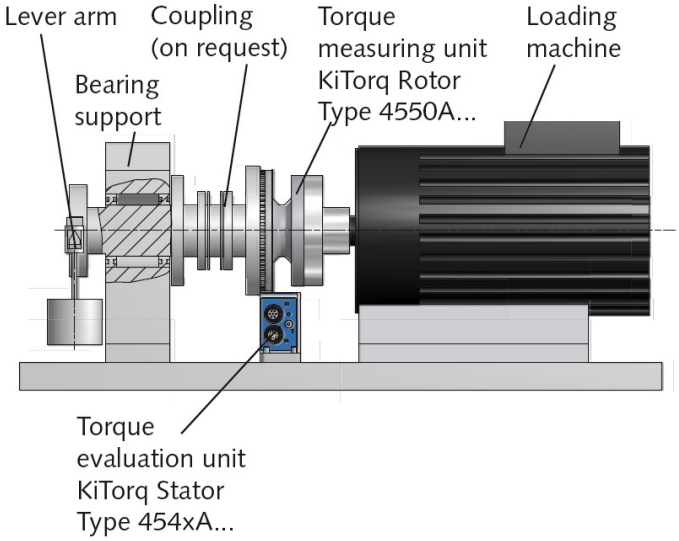

Figure 3: Calibration setup

5. Mechanical Basic Data

Mechanical Basic Data

Type 4550A...			100...	200...	500...	1K0...	2K0...	3K0...	5K0...
Rated torque	M_{nom}	N·m	100	200	500	1 000	2 000	3 000	5 000
Measuring range		N·m	±100	±200	±500	±1 000	±2 000	±3 000	±5 000
Limiting torque	M_{op}	N·m	200	400	1 000	2 000	4 000	6 000	10 000
Rupture torque	M_{rupt}	N·m	>400	>800	>2 000	>4 000	>8 000	>12 000	>18 000
Alternating torque	M_{dyn}	N·m	100	200	500	1 000	2 000	3 000	5 000
Nominal speed	n_{nom}	1/min	20 000	20 000	20 000	20 000	15 000	15 000	12 000
Torsional rigidity	C_T	kN·m/rad	231	349	1 023	1 198	3 277	3 505	8 109
Torsion angle at M_{nom}	φ	°	0,025	0,033	0,028	0,048	0,035	0,049	0,035
Max. bending torque	M_B	N·m	30	50	120	120	220	230	300
Rigidity for bending torque (radial axis)		kN/degree	1,1	1,6	3,7	4,3	9,9	11,5	22,2
Additional planar parallelism error At limit bending torque		mm	0,05	0,06	0,08	0,06	0,06	0,06	0,05
Longitudinal load limit	F_A	kN	5	10	15	20	25	30	40
Rigidity in axial direction		kN/mm	427	588	574	697	1078	1 251	1 599
Transverse load limit	F_Q	kN	2	3	6	11	14	18	20
Rigidity in axial direction		kN/mm	236	282	563	707	1 112	1 214	1 978
Additional max. runout error at transverse load limit		mm	<0,02						
Mass	m	kg	1,5	1,5	1,9	1,9	3,5	3,5	4,6
Partial mass of measurement side	m_{Meas}	kg	0,8	0,8	0,95	0,95	1,8	1,8	2,5
Mass moment of inertia	j	kg·m²	0,0022	0,0022	0,004	0,004	0,0124	0,0123	0,0238
Partial mass moment of inertia on measurement side	j_{Meas}	kg·m²	0,0012	0,0012	0,0022	0,0022	0,0068	0,0071	0,01384
Balancing class	Q		2,5						

5.1 Technical Data

Noise Immunity (EN 61326-1, Table 2)

Electromagnetic field (AM)	V/m	10
Magnetic field	A/m	100
Electrostatic discharge (ESD)		
Contact discharge	kV	8
Air discharge	kV	4
Fast transients (burst)	kV	1
Impulse voltage (surge)	kV	1
Conducted emissions (AM)	V	10

Mechanical Shock (EN 60068-2-27)

Quantity	n	1 000
Duration	ms	3
Acceleration	m/s²	650

Vibrational Loads in 3 Directions (EN 60068-2-6)

Frequency range	Hz	10 ... 2 000
Duration	h	2,5
Acceleration (Amplitude)	m/s²	200

Speed Measuring

Pulses/revolution		1x60
Jitter (oscillation period)	%	2
Flank spacing tolerance	mm	0,05

6. Dimensions of the Torque Measuring Unit

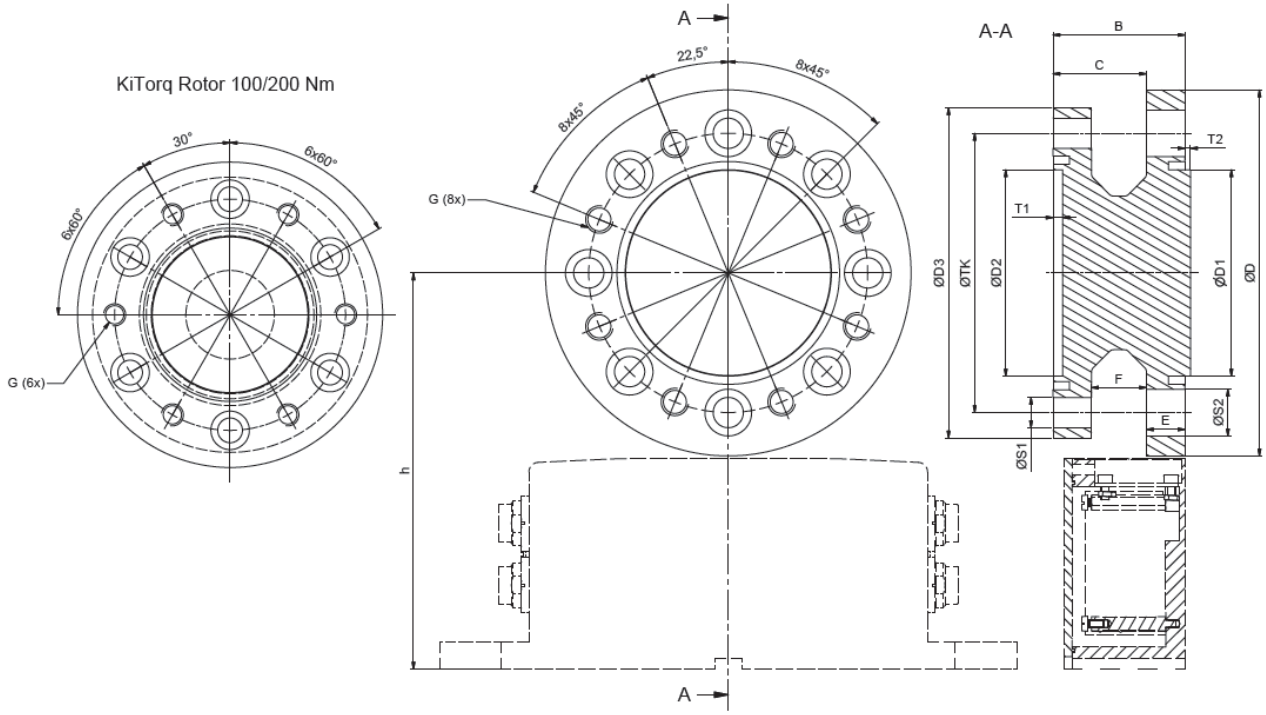

Fig. 1: Dimensional drawing of Type 4550A... KiTorq Rotor torque measuring unit

Dimensions of KiTorq Rotor Torque Measuring Unit in mm

Type	Nominal torque N·m	øD	øTK	øD1^{g6}	øD2^{H6}	øD3	B	C	E	F	øS1	øS2	G	T1	T2	h
4550A100	100	111	84	57	57	100	44	30	14	16	9	14	M8	3,5	2,5	133
4550A200	200	111	84	57	57	100	44	30	14	16	9	14	M8	3,5	2,5	133
4550A500	500	133	101,5	75	75	120	48	34	14	20	11	17	M10	3,5	2	144
4550A1k0	1 000	133	101,5	75	75	120	48	34	14	20	11	17	M10	3,5	2	144
4550A2k0	2 000	167	130	90	90	156	53	36	17	22	13	20	M12	3	2,5	161
4550A3k0	3 000	167	130	90	90	156	53	36	17	22	13	20	M12	3	2,5	161
4550A5k0	5 000	196	155,5	110	110	180	53	36	17	22	15	22	M14	3	2,5	175,5

7. General Technical Data

Limit frequency –3 dB	kHz	10
Operating temperature range (Rated temperature range)	°C	10 ... 60
Service temperature range	°C	0 ... 70
Storage temperature range	°C	–25 ... 80
Scanning rate	kSample	35
Protection class		IP54

8. Ordering Key for the Rotor and Calibration Codes

Type 4550A

Nominal Torque in N·m	
100	100
200	200
500	500
1 000	1k0
2 000	2k0
3 000	3k0
5 000	5k0

Stator	
Without	S00
KiTorq Stator Type 4541A...	S10
KiTorq Stator Type 4542A... Profinet	S2A
KiTorq Stator Type 4542A... Profibus	S2B
KiTorq Stator Type 4542A... CANopen	S2C

Speed	
1x60 Imp./Rev.	N1

Calibration	
WKS 1 single range	KA0
WKS 1 dual range 1:1 and/or 1:10	KA1
WKS 1 dual range 1:1 and/or 1:5	KA2
WKS 2 single range	WA0
WKS 2 dual range 1:1 and/or 1:10	WA1
WKS 2 Dual range 1:1 and/or 1:5	WA2
DAkkS 5 single range, 5 meas. points	DK5
DAkkS 8 single range, 8 meas. points	DK8
DAkkS 5 Dual range, 5 meas. points	D52
DAkkS 8 Dual range, 8 meas. points	D82

9. Standard Calibration and Special Calibration

A Type 4550A... torque measuring flange consists of a rotor and a stator. Both components are calibrated. If a complete system (torque measuring linkage, KiTorq system), consisting of a rotor and stator, is ordered, then the system is calibrated. When ordering the individual components, or replacing a components, the output signals of the system can be calculated using the individual calibrations of the components. For a description, see the data sheet for the stator in question.

Standard Calibration: The rotor is calibrated per WKS 1 as a standard. If ordered as a measurement chain with a KiTorq -Stator, the rotor and stator are calibrate as a torque measurement chain according to WKS 1.
The following signals are set as standard:
Frequency: 240 kHz ±120 kHz
Analog: ±10 V

Special Calibration: Upon request, additional calibrations can be ordered (e.g., second measuring range, another frequency, DAkkS calibration, ...). More information is available in the data sheet for the desired Type 454xA... KiTorq Stator.

The torque measurement chain, consisting of the KiTorq Rotor and KiTorq Stator, has its own separate calibration certificate and a serial number.
If one of the components is replaced (e.g., with a KiTorq Rotor with a different measuring range), then the virtual calibration values for the new measurement chain can be calculated from the individual calibration certificates for the rotor and stator.
All output settings can be changed afterward by the -customer. The calibration certificates apply only to the settings at -delivery, according to the order.

Definition of Calibration Terms:
WKS 1: Works calibration at 5 points right, 3 points left
WKS 2:
Works calibration at 5 points right and left, and epeat series
DAkkS: Calibration per DIN 51309

Our calibration service D-K-17650-01-00 provides traceable -calibrations for torque sensors from all manufacturers.

10. Declaration of Conformity

KISTLER
measure. analyze. innovate.

EC Declaration of Conformity
EG-Konformitätserklärung
Déclaration de conformité CE

Manufacturer Hersteller Fabricant	**Kistler Lorch GmbH** **73547 Lorch** **Germany**

declares that the product/erklärt, dass das Produkt/déclare que le produit

Name/Name/Nom	**KiTorq Torque Measuring Unit (Rotor) /** **KiTorq Drehmoment-Messkörper (Rotor) /** **KiTorq Torque Capteur (Rotor)**
Type/Typ/Type	**4550A...**
Modules/Module/Modules	-
Options/Optionen/Options	**all/alle/toutes**

relates with the following standards/mit den folgenden Normen übereinstimmt/
est conforme aux normes suivantes

EMC Emission EMV Störaussendung Emission EMC	**EN 61000-6-4:2011-09**	**(Class A)**
EMC Immunity EMV Störfestigkeit Immunité EMC	**EN 61000-6-2:2006-03**	

Following the provisions of directive/Gemäss den Bestimmungen der Richtlinie/Conformément
aux dispositions de directive

2004/108/EG **(EMC / EMV / EMC)**

Lorch, January 2014

Franz Winter
General Manager

11. Index

A

Alignment 10
  Sensor 10
Application examples 11

C

Calibration code 14, 15, 16
Clutch 8
Commissioning 8
Counterflanges 9

D

Dimensions 13
Disposal 6

G

General technical data 14

I

Installation 9

M

Mechanical basic data 12
Mechanical setup 8
Mounting the torque measuring unit 9

N

Note on disposal 6

O

Ordering key 14

S

Safety 5

T

Technical Data 12
Terminology 4
Thread-in depth 9
Typical properties 7

U

Using this assembly manual 6