EMC TEST REPORT

FCC 47 CFR Part 15B, ISED ICES-003 Issue 6

Report Reference No	G0M-2012-9512-EF0115B-V01
Testing Laboratory	Eurofins Product Service GmbH
Address	Storkower Str. 38c 15526 Reichenwalde Germany
Accreditation	DAkkS - Registration number : D-PL-12092-01-03 (ISED) ISED Testing Laboratory site: 3470A-2 DAkkS - Registration number : D-PL-12092-01-04 (FCC) FCC Filed Test Laboratory, Reg.-No.: 96970
Applicant	SMT ELEKTRONIK GmbH
Address	An der Prießnitzaue 22 01328 Dresden Germany
Test Specification Standard(s)	47 CFR Part 15 Subpart B ISED ICES-003 Issue 6 ANSI C63.4:2014+A1:2017
Non-Standard Test Method	None
Equipment under Test (EUT):	
Product Description	Datenlogger
Model(s)	MicroShockDetector plus
Additional Model(s)	None
Brand Name(s)	MONILOG MicroShockDetector
Hardware Version(s)	R5
Software Version(s)	3.12
FCC-ID	2AELT-04MONILOG
IC	N/A
Test Result	**PASSED**

Possible test case verdicts:		
required by standard but not tested	N/T	
not required by standard	N/R	
required by standard but not appl. to test object	N/A	
test object does meet the requirement	P(PASS)	
test object does not meet the requirement	F(FAIL)	
Testing:		
Date of receipt of test item	2021-01-19	
Report:		
Compiled by	Stephan Liebich	
Tested by (+ signature) (Responsible for Test)	Stephan Liebich	.....
Approved by (+ signature) (Test Lab Technician)	Matthias Handrik	.....
Date of Issue	2021-03-04	
Total number of pages	25	
General Remarks:		
The test results presented in this report relate only to the object tested. **The results contained in this report reflect the results for this particular model and serial number. It is the responsibility of the manufacturer to ensure that all production models meet the intent of the requirements detailed within this report.** This report shall not be reproduced, except in full, without the written approval of the Issuing testing laboratory.		
Additional Comments:		
None		

ABBREVIATIONS AND ACRONYMS

Acronyms	
Acronym	Description
EUT	Equipment Under Test
FCC	Federal Communications Commission
ISED	Innovation, Science and Economic Development Canada
T_{NOM}	Nominal operating temperature
V_{NOM}	Nominal supply voltage

VERSION HISTORY

Version History			
Version	Issue Date	Remarks	Revised By
01	2021-03-04	Initial Release	

REPORT INDEX

1 Equipment (Test Item) Under Test 6
1.1 Equipment Ports 7
1.2 Equipment Photos - Internal 8
1.3 Equipment Photos - External 9
1.4 Support Equipment 14
1.5 Operational Modes 14
1.6 EUT Configuration 14
1.7 Sample emission level calculation 15
2 Result Summary 16
2.1 Test Conditions and Results - Radiated emissions acc. to ANSI C63.4 17

1 Equipment (Test Item) Under Test

Description	Datenlogger	
Model	MicroShockDetector plus	
Additional Model(s)	None	
Brand Name(s)	MONILOG MicroShockDetector	
Serial Number(s)	2020400012	
Sample ID	32804	
Hardware Version(s)	R5	
Software Version(s)	3.12	
FCC-ID	2AELT-04MONILOG	
IC	N/A	
Class	Class B	
Equipment type	Table top	
Highest internal frequency [MHz]	48	
Radio Module	Type	NFC Module
	Model	NT3H2211W0FT1
	Manufacturer	NXP Semiconductors
	FCC-ID	unknown
	IC	unknown
Supply Voltage	V_{NOM}	3.5 V DC non rechargeable Lithium battery
AC/DC-Adaptor	None	
Manufacturer	SMT ELEKTRONIK GmbH An der Prießnitzaue 22 01328 Dresden Germany	

1.1 Equipment Ports

Name	Type	Attributes	Comment
USB 2.0	IO	Count: 1 Direction: IO Service only: No	According costumer requirement the USB 2.0 port is a service port. Not tested

Description:	
AC	AC mains power input/output port
DC	DC power input/output port
BAT	DC power input port connected to external battery
IO	Input/Output port
TP	Telecommunication port
NE	Non-electrical port

1.2 Equipment Photos - Internal

PCB TOP SIDE WITH BATTERY

PCB TOP SIDE WITHOUT BATTERY
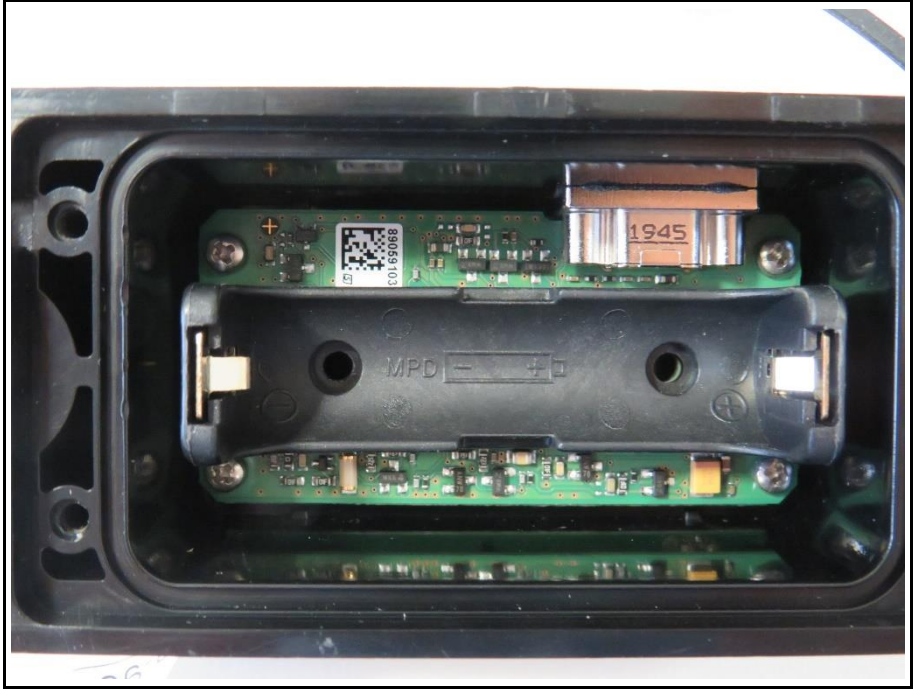

1.3 Equipment Photos - External

EUT IN PERSPECTIVE I
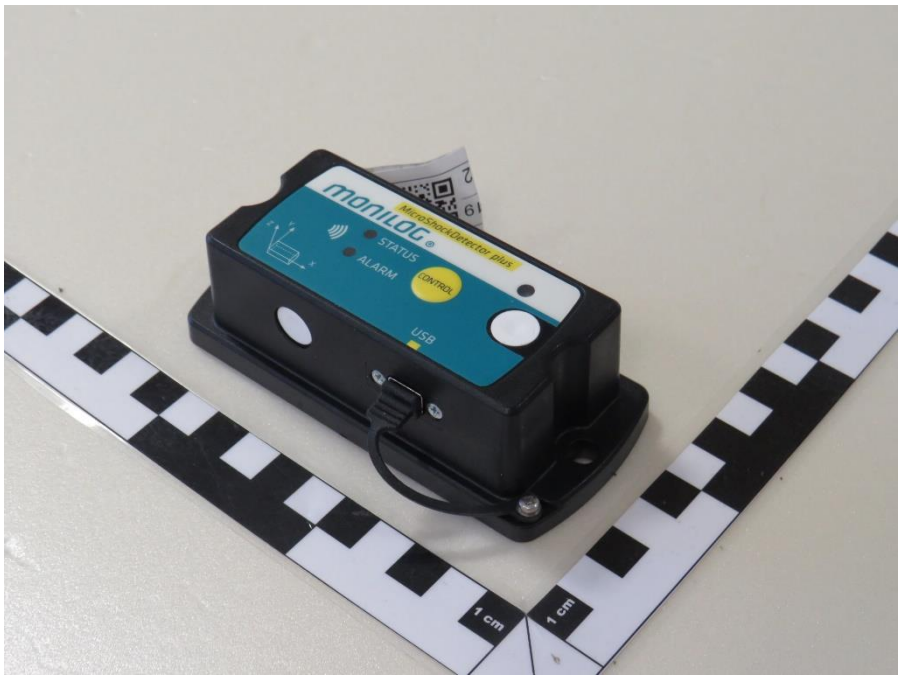

EUT IN PERSPECTIVE II

EUT LABEL

EUT TOP SIDE

EUT BOTTOM SIDE

EUT FRONT SIDE

EUT FRONT SIDE WITHOUT USB PROTECTION

EUT LEFT SIDE

EUT RIGHT SIDE

EUT REAR SIDE

1.4 Support Equipment

Product Type	Device	Manufacturer	Model	Comment
SIM	Smartphone	SAMSUNG	Galaxy S4	Companion device
Description:				
AE	Auxiliary Equipment			
SIM	Simulator			
MON	Monitoring Equipment			
CBL	Connecting Cable			
Comment: --				

1.5 Operational Modes

Mode #	Description
1	Synchronous measurement every second, save and load the collected data from the sensors into/from the memory (flash, EEPROM), maximum device performance (sleep Mode is deactivated), permanent data transfer via NFC connection from/to Smartphone.
Comment: --	

1.6 EUT Configuration

Configuration #	Description
1	EUT is powered by 3.5 V DC internal Lithium battery. Smartphone is on top of the device. Only NFC on Smartphone was activated, all other RF Radios from Smartphone were set in flight mode.
Comment: --	

1.7 Sample emission level calculation

The following is a description of terms and a sample calculation, as appears in the radiated emissions data table. The numbers used in the calculation are for example only. There is no direct correlation to the specific data taken for the product described in this document:

Reading:

This is the reading obtained on the spectrum analyser in dBµV. Any external preamplifiers used are taken into account through internal analyser settings.

A.F.:

This is the antenna factor for the receiving antenna. It is a conversion factor, which converts electric fields strengths to voltages, which can be measured directly on the spectrum analyser. It is treated as a loss in dB. Cable losses have been included with the A.F. to simplify the calculations. The antenna factor is used in calculations as follows:

Reading on Analyser (dBµV) + A.F. (dB/m) = Net field strength (dBµV/m)

Net:

This is the net field strength measurement (as shown above).

Limit:

This is the FCC Class B radiated emission limit (in units of dBµV/m). The FCC limits are given in units of µV/m. The following formula is used to convert the units of µV/m to dBµV/m:

Limit (dBµV/m) = 20*log (µV/m)

Margin:

This is the margin of compliance below the FCC limit. The units are given in dB. A negative margin indicates the emission was below the limit. A positive margin indicates that the emission exceeds the limit.

Example only:

Reading + AF	= Net Reading	:	Net reading - FCC limit	= Margin
+21.5 dBµV + 26 dB/m	= 47.5 dBµV/m	:	47.5 dBµV/m - 57.0 dBµV/m	= -9.5 dB

2 Result Summary

FCC 47 CFR Part 15B, ISED ICES-003 Issue 6				
Reference	**Requirement**	**Reference Method**	**Result**	**Remarks**
Emission				
FCC 15.109 ICES-003, 6.2	Radiated emissions	ANSI C63.4:2014 +A1:2017	PASS	--
FCC 15.107 ICES-003, 6.1	AC power line conducted emissions	ANSI C63.4:2014 +A1:2017	N/T	Customer requirement
Comment:				

Possible Test Case Verdicts	
PASS	Test object does meet the requirements
FAIL	Test object does not meet the requirements
N/T	Required by standard but not tested
N/R	Not required by standard for the test object

2.1 Test Conditions and Results - Radiated emissions acc. to ANSI C63.4

2.1.1 Information

Test Information	
Reference	FCC 15.109, ICES-003, 6.2
Reference method	ANSI C63.4:2014+A1:2017 Section 8
Equipment class	Class B
Equipment type	Table top
Highest internal frequency [MHz]	48
Measurement range	30 MHz to 1 GHz
Temperature [°C]	21 – 24
Humidity [%]	19 – 23
Operator	Stephan Liebich
Date	2021-02-01

2.1.2 Setup

Measurement up to 1 GHz

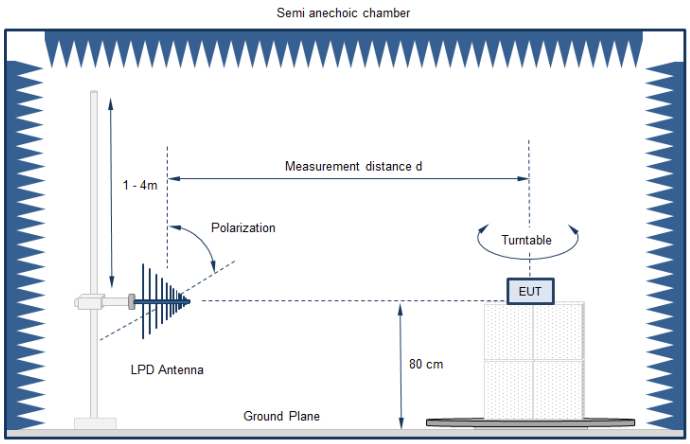

Measurement above 1 GHz

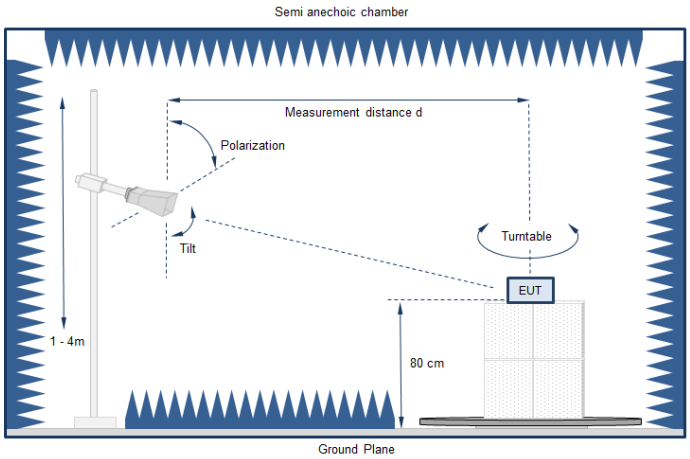

Equipment placement - Table top

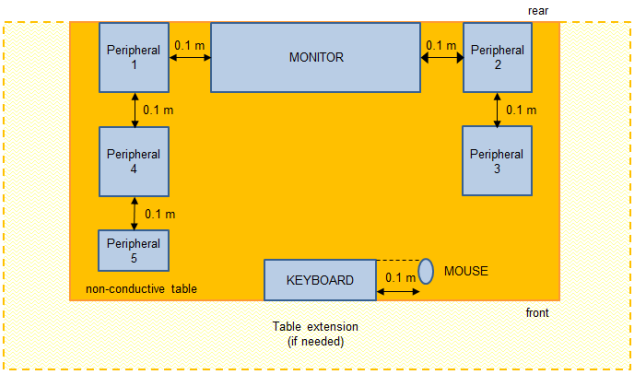

Test Setup

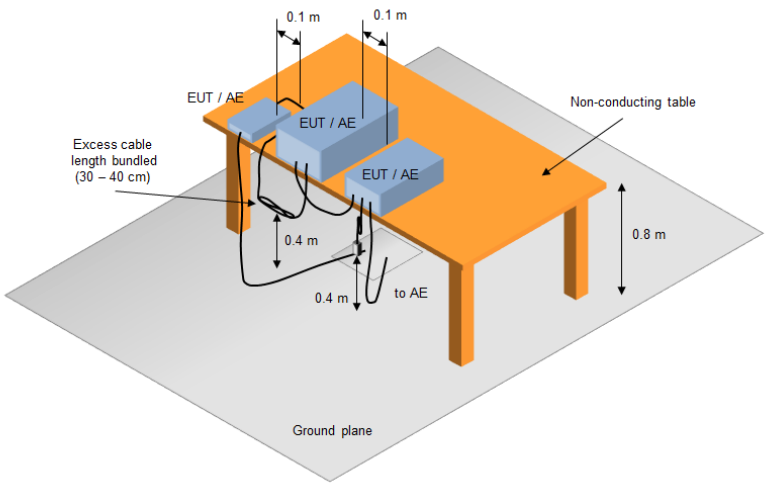

2.1.3 Equipment

Test Software			
Description	Manufacturer	Name	Version
EMC Software	DARE Instruments	Radimation	2020.1.8

Test Equipment					
Description	Manufacturer	Model	Identifier	Cal. Date	Cal. Due
Anechoic chamber	Frankonia	AC1	EF00062	2018-07	2021-07
EMI Test Receiver	Keysight	N9038A-526/WXP	EF01070	2020-06	2021-06
Biconical Antenna	R&S	HK 116	EF00030	2019-04	2022-04
LPD Antenna	R&S	HL 223	EF00187	2019-05	2022-05
Climatic Sensor	Embedded Data Systems, LLC.	280010000025417E	EF01054	2020-03	2021-03

2.1.4 Procedure

Exploratory measurement
1. The EUT was placed on a non-conductive table at a height of 0.8m. 2. The EUT and support equipment, if needed, were set up to simulate typical usage. 3. Cables, of type and length specified by the manufacturer, were connected to at least one port of each type and were terminated by a device or simulating load of actual usage. 4. The antenna was placed at a distance of 3 or 10 m. 5. The received signal was monitored at the measurement receiver. 6. This procedure has to be performed in both antenna polarizations, horizontal and vertical. 7. The arrangement of the equipment with the maximum emission level is shown on the setup picture at item 2.1.7

Final measurement
1. The EUT was placed on a 0.8 m non-conductive table at a 3 m distance from the receive antenna. The antenna output was connected to the measurement receiver. 2. A biconical antenna was used for the frequency range 30 – 200 MHz, a logarithmic periodical antenna was used for the frequency range from 200 – 1000 MHz. Above one 1 GHz a Double Ridged Broadband Horn antenna was used. The antenna was placed on an adjustable height antenna mast. 3. The EUT and cable arrangement were based on the exploratory measurement results. 4. Emissions were maximized at each frequency by rotating the EUT and adjusting the receive antenna height and polarization. The maximum values were recorded. 5. The test data of the worst-case conditions were recorded and shown on the next pages.

2.1.5 Limits

Class B @ 3 m		
Frequency [MHz]	Detector	Limit [dBµV/m]
30 - 88	Quasi-peak	40
88 - 216	Quasi-peak	43.5
216 - 960	Quasi-peak	46
960 - 1000	Quasi-peak	54
> 1000	Peak Average	74 54

Class A @ 10 m		
Frequency [MHz]	Detector	Limit [dBµV/m]
30 - 88	Quasi-peak	39
88 - 216	Quasi-peak	43.5
216 - 960	Quasi-peak	46.5
960 - 1000	Quasi-peak	49.5
> 1000	Peak Average	69.5 49.5

2.1.6 Results

Test Results			
Operational mode	EUT Configuration	Verdict	Remark
1	1	PASS	--

2.1.7 Setup Photos

RADIATED EMISSION - EUT CONFIGURATION 1 - 30 MHz to 200 MHz

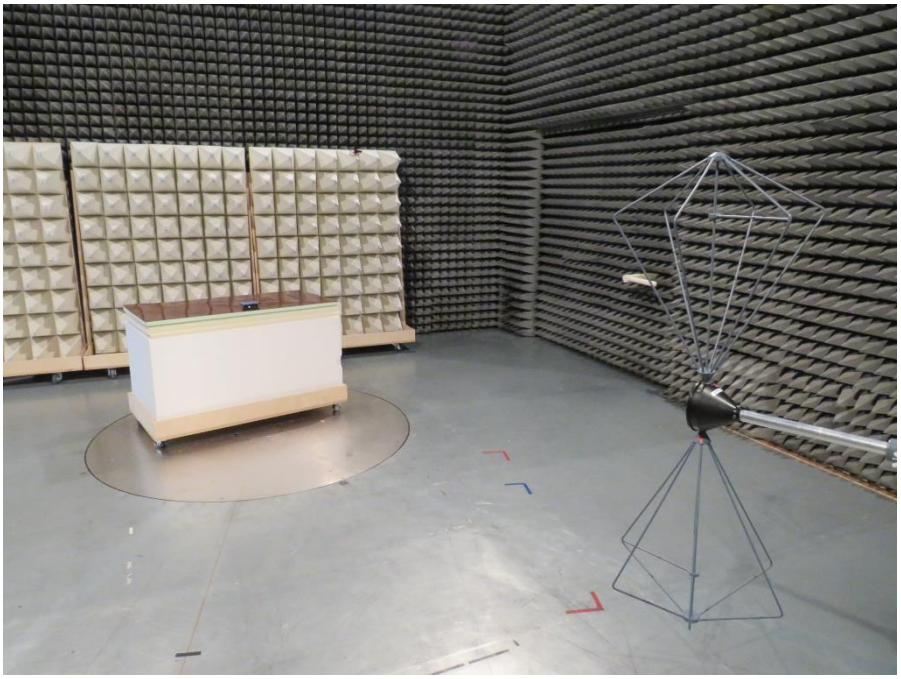

RADIATED EMISSION - EUT CONFIGURATION 1 - 200 MHz to 1 GHz

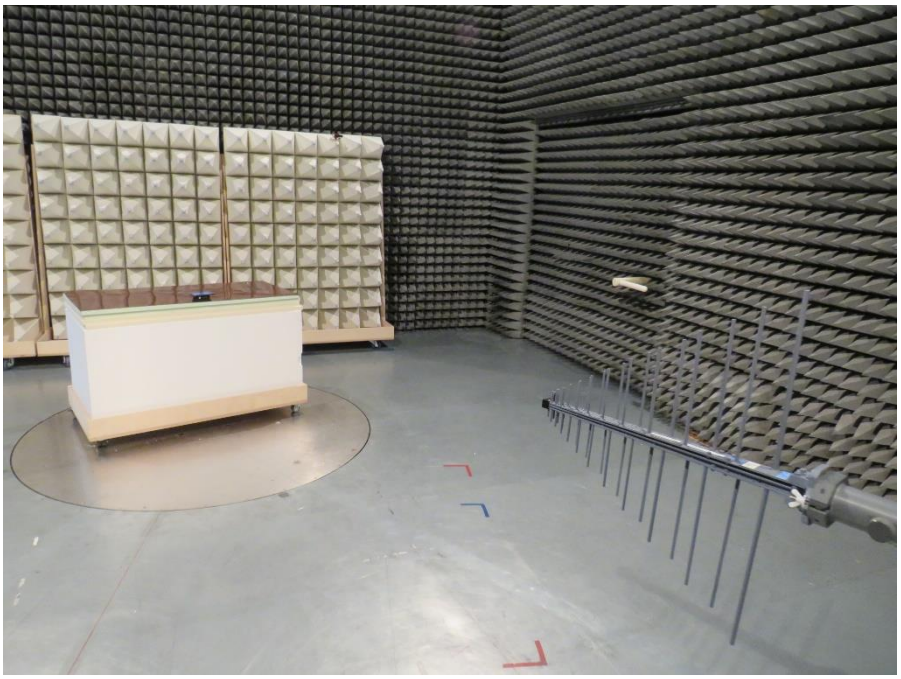

RADIATED EMISSION - EUT CONFIGURATION 1 - FOCUS

2.1.8 Records

Radiated emissions
according to FCC part 15B

Project Number:	G0M-2012-9512
Applicant:	SMT ELEKTRONIK GmbH
Model Description:	Datenlogger
Model:	MicroShockDetector plus
Test Sample ID:	32804
Test Site:	Eurofins Product Service GmbH
Operator:	Mr. Liebich
Test Date:	2021-02-01
Operating Conditions:	ambient temperature: 22 °Celsius power input: 3.5 V DC by internal Lithium battery
Antenna:	Rohde & Schwarz HK 116, Vertical
Measurement Distance:	3m
Operational Mode &	Mode 1
EUT Configuration:	EUT Configuration 1
Note 1:	

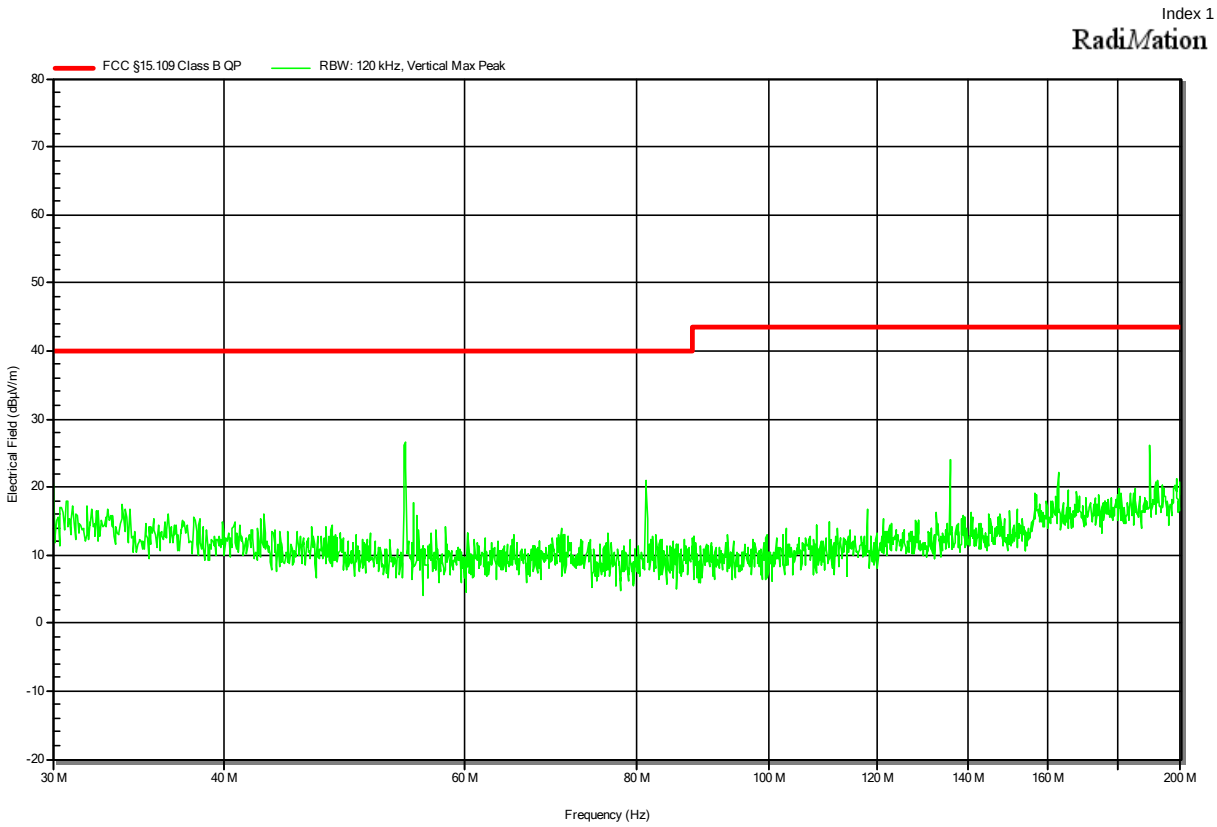

Radiated emissions
according to FCC part 15B

Project Number:	G0M-2012-9512
Applicant:	SMT ELEKTRONIK GmbH
Model Description:	Datenlogger
Model:	MicroShockDetector plus
Test Sample ID:	32804
Test Site:	Eurofins Product Service GmbH
Operator:	Mr. Liebich
Test Date:	2021-02-01
Operating Conditions:	ambient temperature: 22 °Celsius power input: 3.5 V DC by internal Lithium battery
Antenna:	Rohde & Schwarz HK 116, Horizontal
Measurement Distance:	3m
Operational Mode & EUT Configuration:	Mode 1 EUT Configuration 1
Note 1:	

Index 2

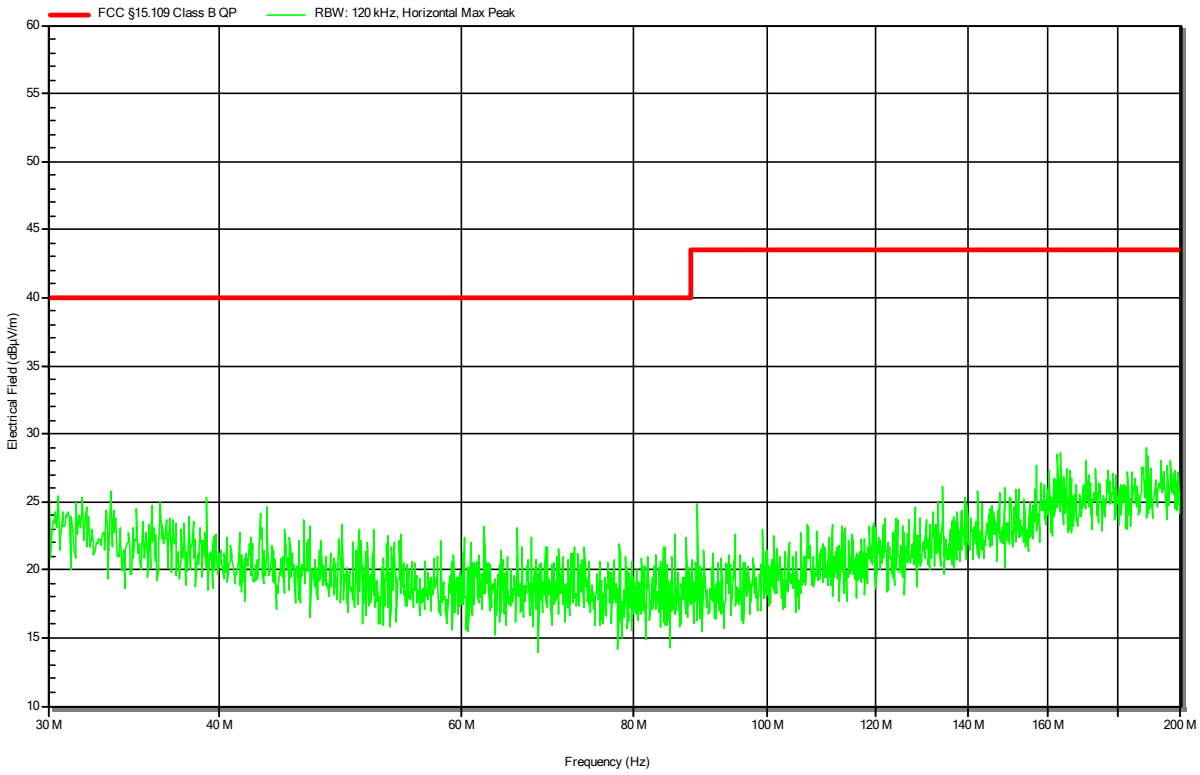

Radiated emissions
according to FCC part 15B

Project Number:	G0M-2012-9512
Applicant:	SMT ELEKTRONIK GmbH
Model Description:	Datenlogger
Model:	MicroShockDetector plus
Test Sample ID:	32804
Test Site:	Eurofins Product Service GmbH
Operator:	Mr. Liebich
Test Date:	2021-02-01
Operating Conditions:	ambient temperature: 22 °Celsius power input: 3.5 V DC by internal Lithium battery
Antenna:	Rohde & Schwarz HL 223, Vertical
Measurement Distance:	3m
Operational Mode & EUT Configuration:	Mode 1 EUT Configuration 1
Note 1:	

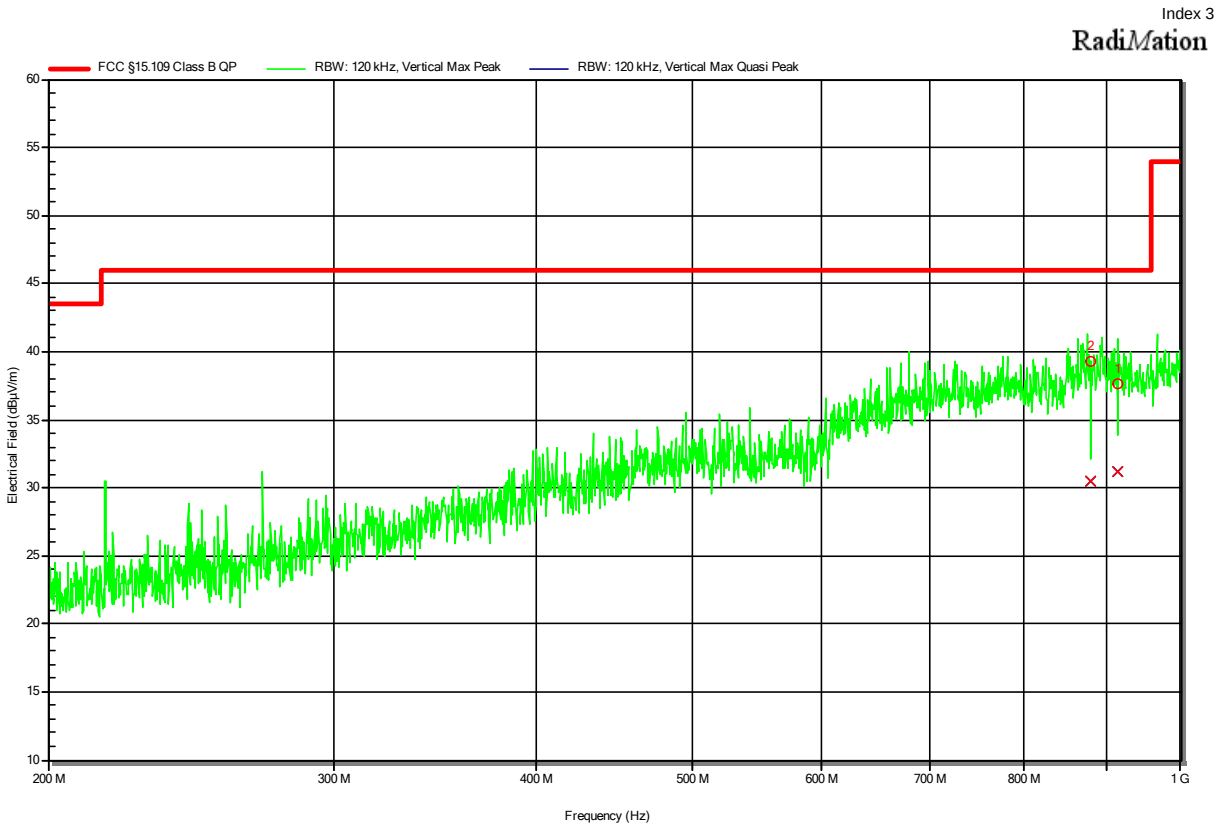

Peak Number	Frequency	Quasi-Peak	Quasi-Peak Limit	Quasi-Peak Difference	Quasi-Peak Status	Angle	Height
1	913.66 MHz	31.17 dBµV/m	46.02 dBµV/m	-14.85 dB	Pass	0 degrees	1 m
2	879.862 MHz	30.51 dBµV/m	46.02 dBµV/m	-15.51 dB	Pass	0 degrees	1 m

Radiated emissions
according to FCC part 15B

Project Number:	G0M-2012-9512
Applicant:	SMT ELEKTRONIK GmbH
Model Description:	Datenlogger
Model:	MicroShockDetector plus
Test Sample ID:	32804
Test Site:	Eurofins Product Service GmbH
Operator:	Mr. Liebich
Test Date:	2021-02-01
Operating Conditions:	ambient temperature: 22 °Celsius power input: 3.5 V DC by internal Lithium battery
Antenna:	Rohde & Schwarz HL 223, Horizontal
Measurement Distance:	3m
Operational Mode & EUT Configuration:	Mode 1 EUT Configuration 1
Note 1:	

Index 4

RadiMation

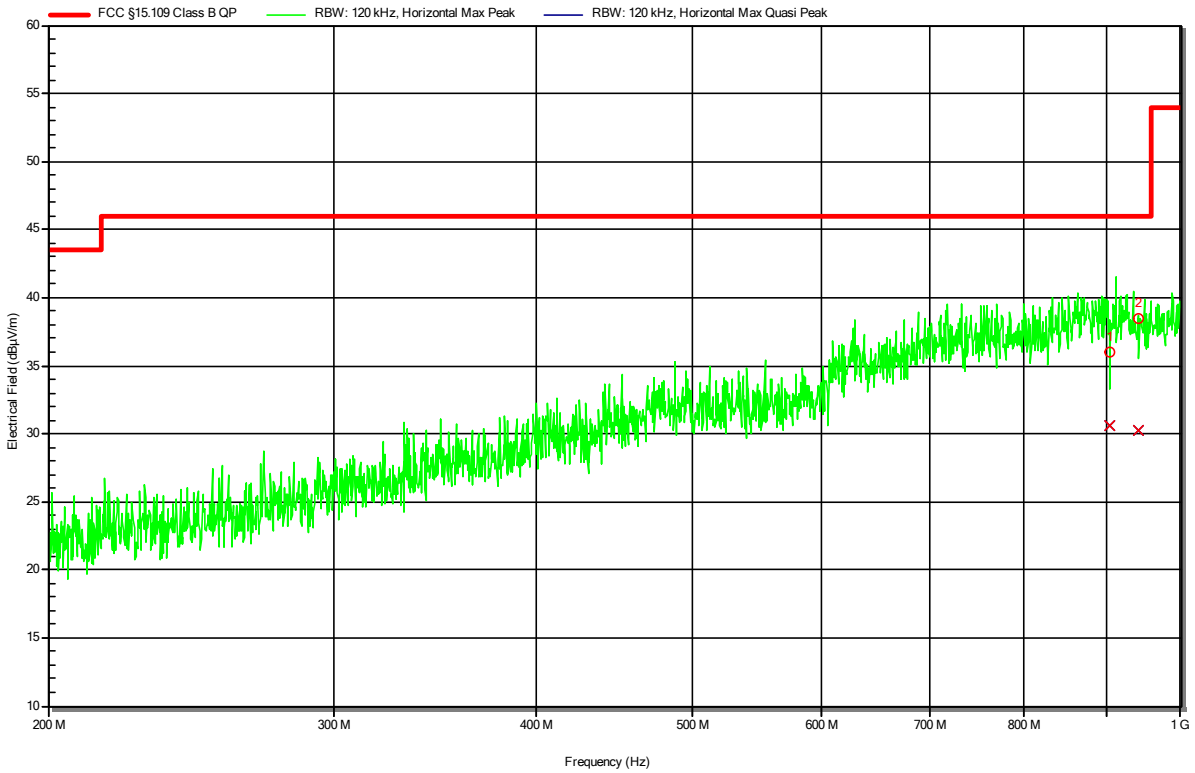

Peak Number	Frequency	Quasi-Peak	Quasi-Peak Limit	Quasi-Peak Difference	Quasi-Peak Status	Angle	Height
1	904.972 MHz	30.56 dBµV/m	46.02 dBµV/m	-15.46 dB	Pass	0 degrees	1 m
2	941.681 MHz	30.3 dBµV/m	46.02 dBµV/m	-15.72 dB	Pass	0 degrees	1 m