Monitor One datasheet

The pictures in this preliminary datasheet are of a pre-release unit. The production units will be a different color, and may have other minor differences.

The Monitor One is an off-the-shelf complete gateway design, like the Tracker One. The Monitor One is in a larger IP67 waterproof enclosure with room inside for an expansion card and additional connectors, allowing it to be used in more custom scenarios than the Tracker One.

- **Ready to go** with rugged IP67-rated enclosure with room inside for an expansion card.

- **Flexible power supply** to easily add asset tracking to most devices with a 6 - 30 VDC power input and a large 18650 LiPo battery pack.
- **Internal or external antennas** for cellular and GNSS.
- **Temperature sensors** on the carrier board, and also a battery pack temperature sensor.
- **Expansion card connector** to allow for custom application specific hardware.
- **RGB LED** for system status, and two user RGB LEDs for your own use, visible from outside the enclosure.
- **User button**, waterproof and accessible from outside the enclosure.

Particle gateway device like the Monitor One and Tracker One are designed to be used off-the-shelf to interface to other devices and sensors using standard protocols such as CAN bus, I2C, and serial.

For information on setting up a Monitor One Developer Edition, see the Monitor One Quickstart.

Block diagram

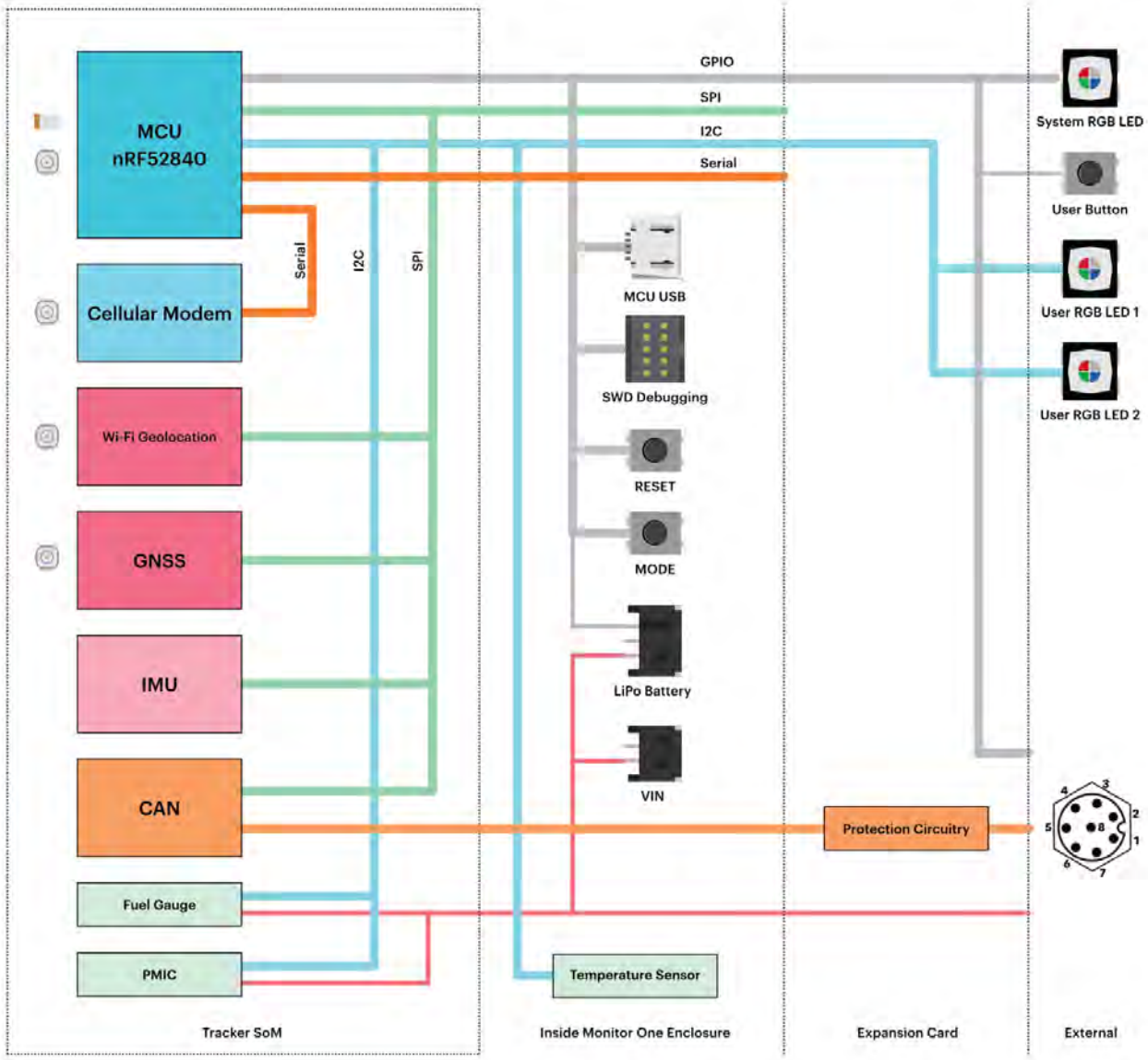

Details about the Tracker SoM that is contained within the Monitor One can be found in the Tracker SoM Datasheet.

Certification

The Monitor One Developer's Edition is currently in the engineering sample stage.

Certification is not expected until September or October 2023.

External features

Label	Feature
1	System RGB LED
2	GNSS antenna (internal)
3	Cellular antenna (internal)
4	External connectors (on bottom)
5	Magnetic, bolt-down, or strap-down mounting bracket
6	User RGB LEDs (2)
7	User button (externally accessible)
8	Wi-Fi geolocation antenna (internal, optional)
9	Cover screws (6) (M2 hex, 2mm)

User button

A waterproof button is available from the outside of the enclosure.

- Long press (10 seconds) resets the device (as if the RESET button was pressed)
- Shorter press and multiple press can be handled by your user firmware for your own features

User LEDs (2)

- There are two small RGB LEDs visible from the outside on the side of the unit, next to the user button.
- The upper LED defaults to being a GNSS lock indicator:
  - Off: GNSS off
  - Blinking (green): attempting to get a GNSS fix
  - On (green): GNSS fix acquired
- You can program custom colors, blinking, and fade effects from your user firmware for the lower LED.
- LEDs are controlled by a ADP8866 I2C LED controller.

Connectors

The bottom plate of the Monitor One can be customized with different connectors for your application.

Label	Feature
1	Cellular antenna (SMA)
2	M12 connector (8-pin)
3	M12 connector (4-pin)
4	GNSS antenna (SMA)
5	Mounting plate attachment screw

By default the Monitor One uses the internal cellular and GNSS antennas, but can be switched to using the external connectors inside the enclosure.

The cellular (1) and GNSS (4) antennas are not connected internally at the factory. In order to use the external connectors you must open the case, disconnect the internal antenna, and instead connect the U.FL connector for the external jack.

The Monitor One is equipped with 2 external-facing SMA bulkhead connectors for both cellular and GNSS but are disconnected internally. The hardware is ready for use with external antennas giving the ability to connect a wide variety of application-specific antennas. It is recommended that the user perform required RF certifications with the selected antenna installed as the Monitor One has only been certified for use in select regions with the internal antennas.

Mounting

The Monitor One is intended to be mounted in the orientation shown at the top of the page, with the connectors facing down. You can also mount it with the mounting plate mounted on a flat surface as the GNSS antenna is angled to allow it to work in either orientation.

When using external cellular and GNSS antennas you can orient the Monitor One in other directions.

Label	Details
1	Mounting screw or bolt holes
2	Slots for strap mounting
3	Magnets
4	Mounting plate removal screw (M3 hex, 3mm)

The mounting plate contains two magnets (3) that allow it to be easily mounted on a metal surface.

The mounting plate is removable from the back of the unit after removing the screw on the bottom (4), near the expansion connectors.

Once removed, you can screw or bolt the mounting plate through the four holes (1) and reattach the Monitor One. This is good for rough conditions and for mounting on non-metal surfaces.

The mounting plate can be strap mounted through the two slots (2).

The magnets do not need to removed to use screw, bolt, or strap mounting.

Dimensions	Metric	SAE
Top, width between mounting holes	28 mm	1 3/32"
Bottom, width between mounting holes	46 mm	1 13/16"
Height between mounting holes	140 mm	5 1/2"

Dimensions	Metric	SAE
Bolt/screw head hole diameter (maximum)	12.46 mm	31/64"
Bolt/screw head maximum height (maximum)	4.0 mm	5/32"
Bolt/screw hole diameter (maximum)	4.33 mm	11/64"
Bolt/screw shaft to surface (maximum)	3.65 mm	9/64"
Recommended bolt or screw	M4	#8

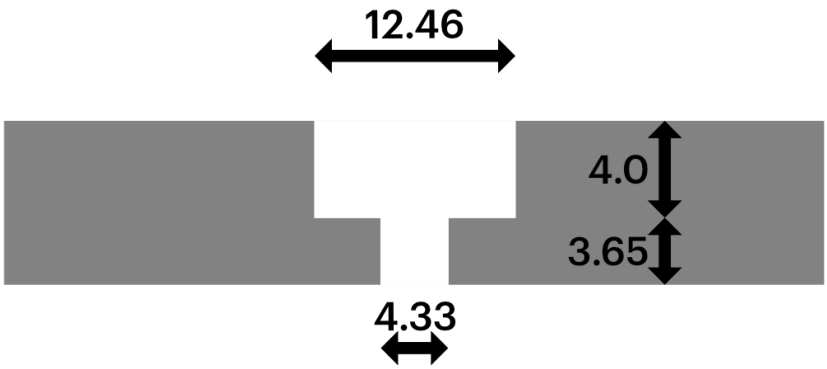

When mounting using a strap, the strap will hold the mounting bracket against a surface and is sandwiched between the mounting bracket and the Monitor One enclosure.

Dimensions	Metric	SAE
Maximum strap width	15 mm	19/32"

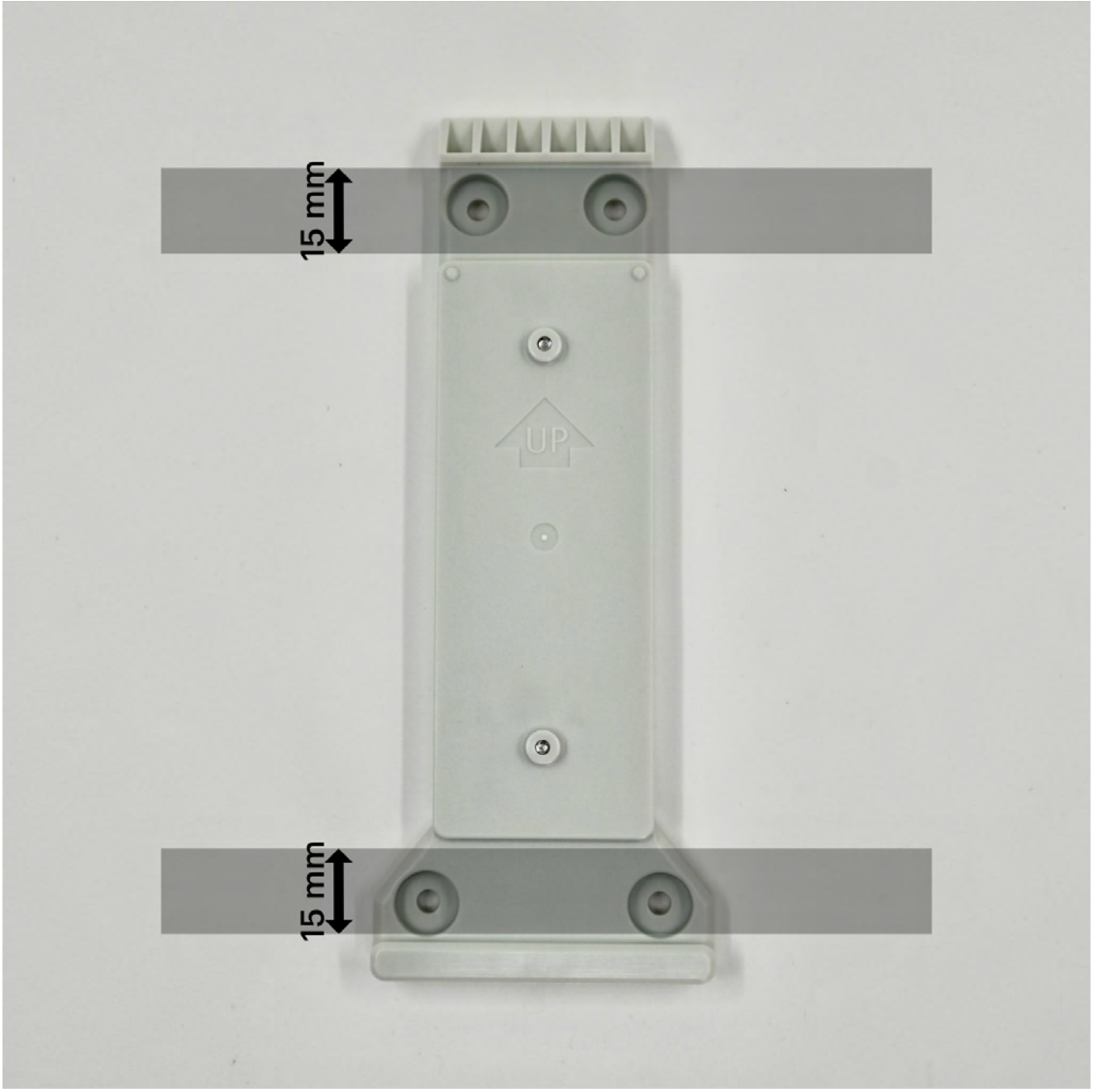

If you wish to fabricate your own compatible mounting bracket, the STEP file can found in the Monitor One Github repository.

Internal features

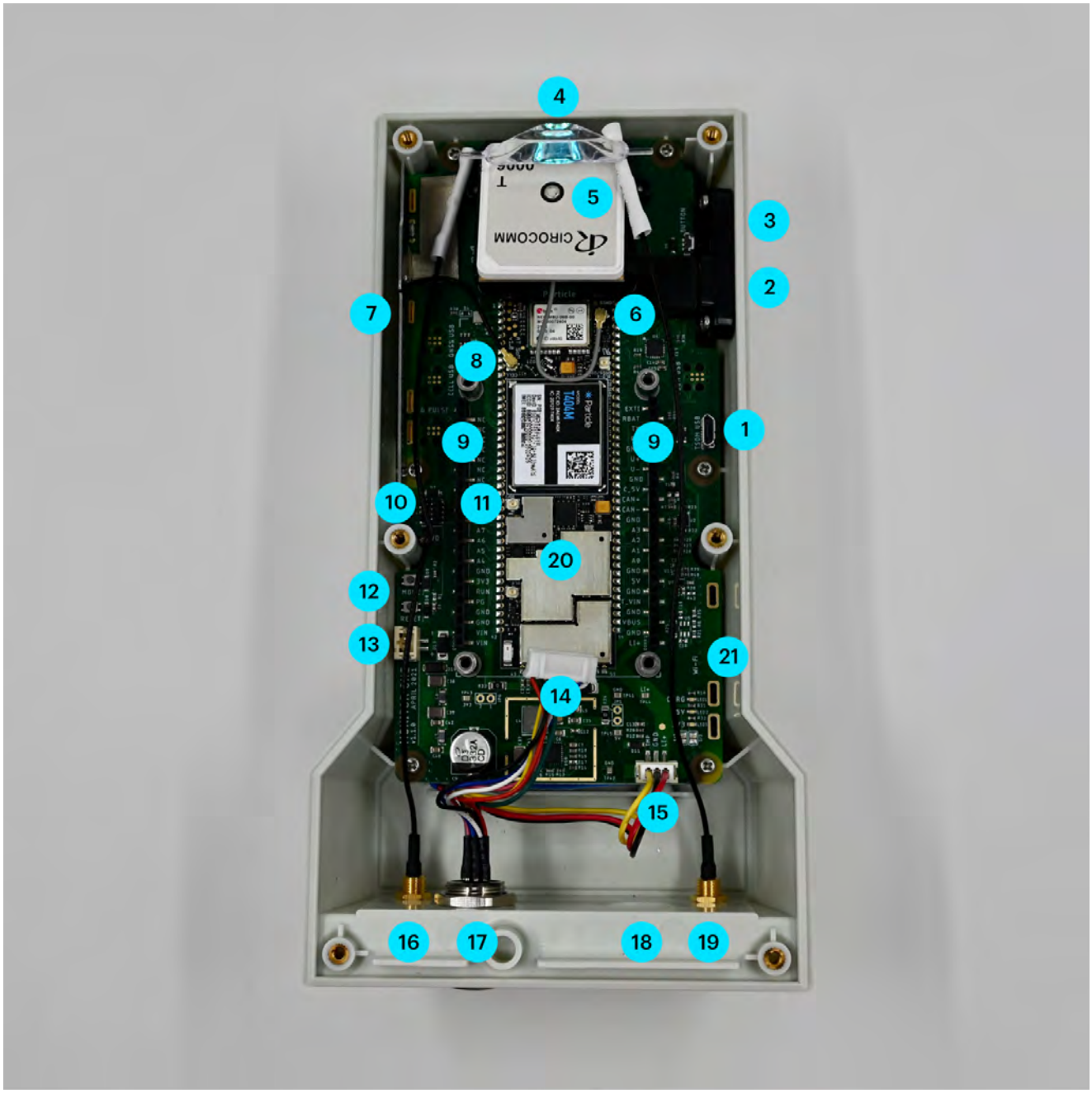

Label	Feature
1	MCU USB Connector (Micro B)
2	User RGB LEDs (2, externally visible)
3	User Button (externally accessible)
4	System RGB LED (externally visible)
5	GNSS antenna (internal, optional)
6	GNSS antenna U.FL connector
7	Cellular antenna (internal)
8	Cellular antenna U.FL connector
9	Expansion card headers (2)
10	SWD debugging connector

Label	Feature
11	Wi-Fi geolocation antenna U.FL connector
12	MODE and SETUP buttons
13	VIN connector
14	Expansion card to external connector cable
15	LiPo battery connector
16	Cellular antenna SMA connector (external)
17	Expansion card external connector #1 (M12, 8-pin)
18	Expansion card external connector #2 (M12)
19	GNSS antenna SMA connector (external)
20	Tracker SoM module
21	Wi-Fi geolocation antenna (internal, not pictured)

I/O Card

The Monitor One is designed with easy-to-use expansion headers and an enclosure with sufficient space inside for an expansion card, and for additional expansion connector through the wall of enclosure.

The Monitor One Developer's Edition includes the I/O Card, which includes:

Feature	Location	Details
VIN	M12 8-pin	Power input, 6 - 30V DC
CAN Bus	M12 8-pin	
RS485 (Modbus)	M12 8-pin	
4-20 mA input	M12 8-pin	
0-10V analog input	M12 8-pin	
12-24V slow-signal input	M12 4-pin	Opto-isolated
Relay	M12 4-pin	30VDC 2A maximum
QWIIC connector	expansion card	3.3V I2C

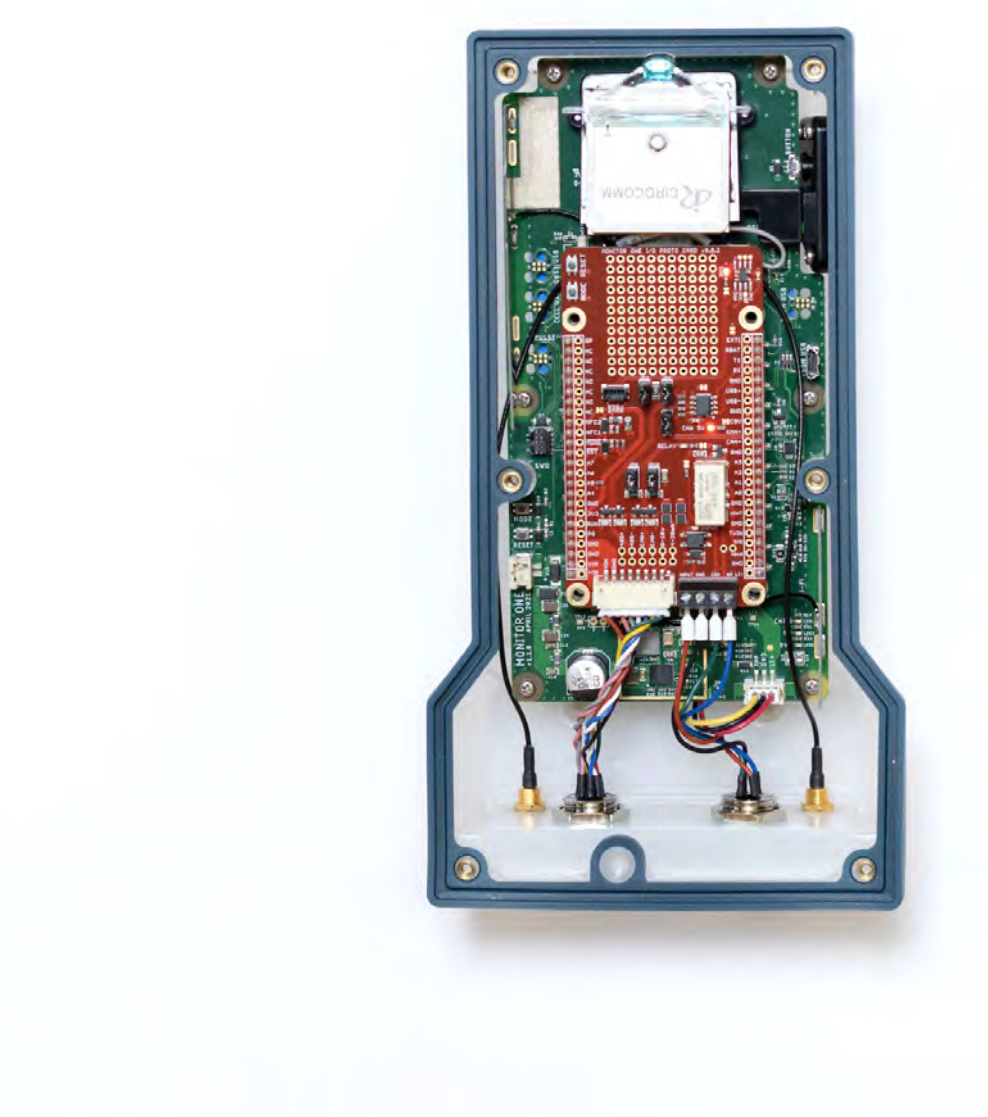

I/O Card M12 8-pin to flying leads

The Monitor One includes a M12 8-pin male to flying leads cable, 1500±20mm (about 60 inches or 5 feet). This is used to power the Monitor One, and also use the 4-20mA, 0-10V analog in, CAN bus, and RS485 (Modbus) interfaces.

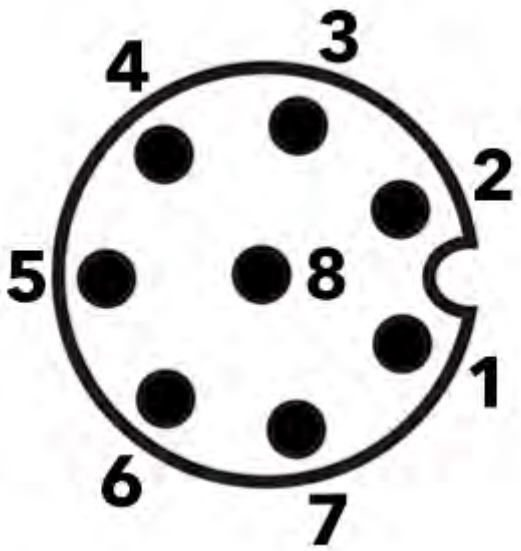

Looking at the pins on the end of the connector on the cable

Conn P1 (M12)	Color	Function	GPIO
1	White	CAN_P	
2	Red	VIN (6-30 VDC)	
3	Green	4-20mA input	A7
4	Yellow	0-10V input	A6
5	Gray	RS485_N	
6	Pink	RS485_P	
7	Blue	CAN_N	
8	Black	Ground	

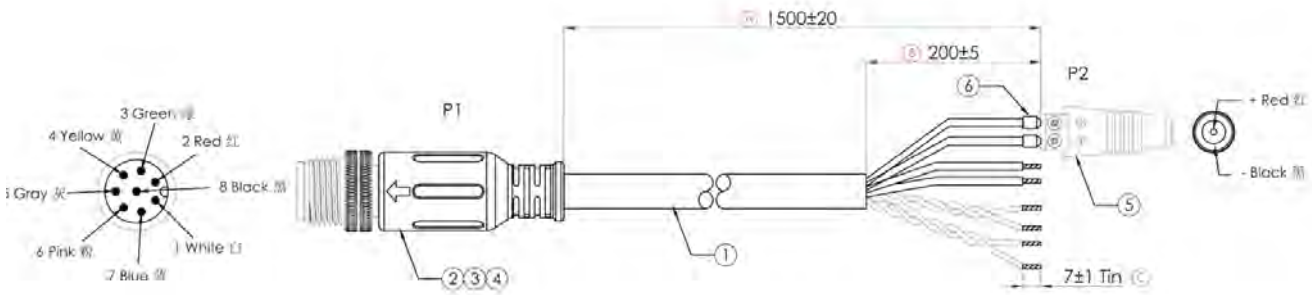

Also included is an adapter from screw terminals to a 5.5x2.1mm barrel jack, center positive. If you disconnect and reconnect the adapter, make sure the + screw terminal is connected to red and the -

screw terminal is connected to black. An appropriate 24 VDC power adapter is included.

Any 6VDC to 30VDC power adapter at 2A with a 5.5x2.1mm barrel connector, center positive can be used instead, if desired. For automotive use, you can use this power input directly to a 12V or 24V vehicle power system as the power supply is designed to handle transient voltage present on vehicle power systems.

The RS485 and CAN interface pins on the M12 8-pin connector cannot be used as GPIO.

I/O Card M12 4-pin to flying leads

The Monitor One includes a M12 4-pin male to flying leads cable, 1500±20mm (about 60 inches or 5 feet).

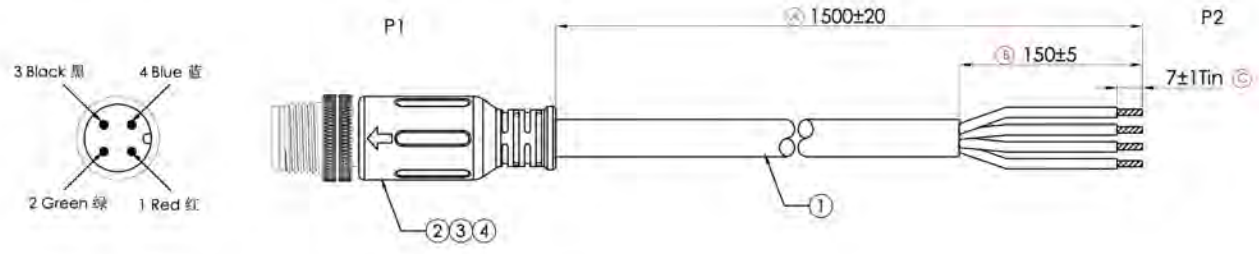

Conn P1 (M12)	Color	Function	GPIO
1	Red	12-24V slow-signal input	A5
2	Green	Relay COM	
3	Black	Ground	
4	Blue	Relay (NO)	NFC_PIN2

I/O Card details

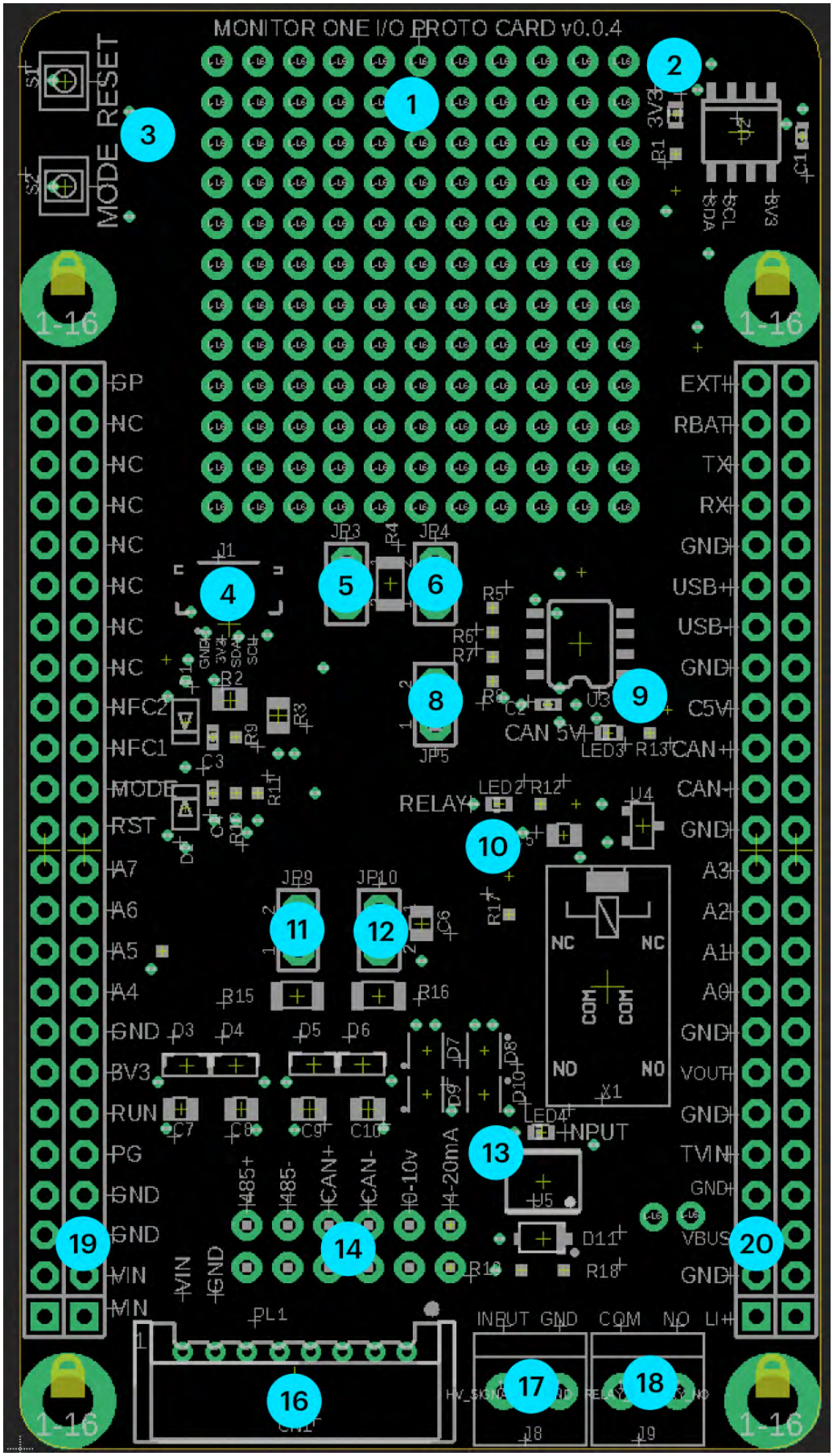

Label	Details
1	Prototyping area

Label	Details
2	Power LED (LED1)
3	RESET and MODE buttons
4	QWIIC (I2C) connector
5	RS-485 120 ohm termination resistor enable (JP3)
6	RS-485 pull-up resistor (JP4)
8	RS-485 pill-down resistor (JP5)
9	CAN_5V LED (LED3)
10	Relay energized LED (LED2)
11	CAN termination resistor enable (JP9)
12	CAN termination capacitor enable (JP10)
13	Slow-signal input (12-24V) powered (LED4)
14	M12 8-pin solder jumpers, location for prototyping wires
16	Connector to M12 8-pin
17	Slow-signal input (12-24V) and GND
18	Relay COM and NO (normally open)
19	Access to expansion card signals
20	Access to expansion card signals

The M12 4-pin bulkhead connector has flying leads that are connected to the screw terminals (18) as follows:

M12 Pin	Color	Card
1	Red	INPUT
2	Green	COM
3	Black	GND
4	Blue	NO

Customizing the I/O Card

If you wish to build upon the I/O Card, there is a small prototyping area (1).

If you need signals from the expansion card interface, they are available in the rows of pins (19, 20).

If you wish to disable an interface that you are not using and re-use the pins on the M12 8-pin connector, there is a small trace jumper between the rows of pins in area (14). Cutting this trace

isolates the expansion card signal from the signal to the connector (16). Then you can solder a small jumper wire to replace the signal on the M12 8-pin.

The Eagle CAD schematic and board layout files for the I/O card can be found in the Monitor One Github repository.

Block diagram - I/O Card

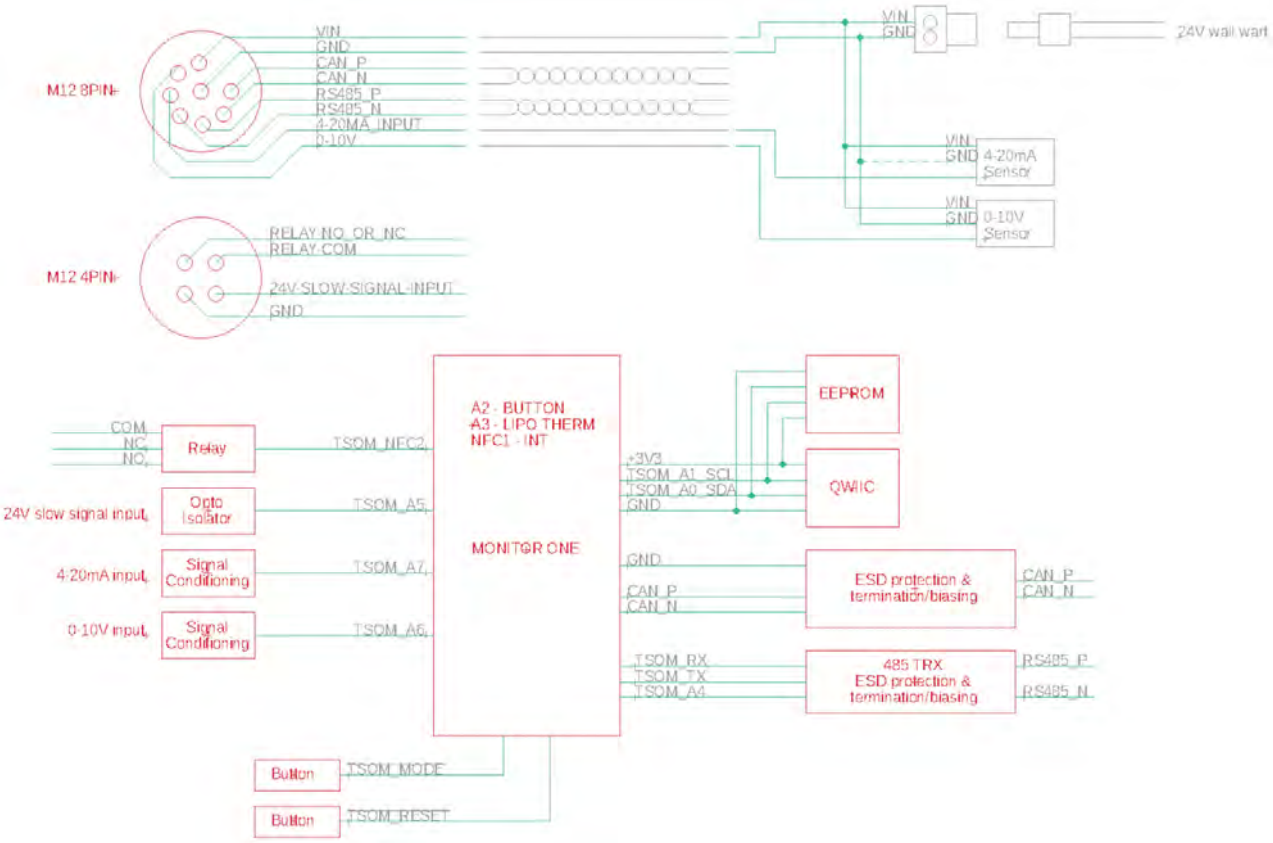

Schematics - I/O Card

Interconnects - I/O Card

CARD INTERCONNECTS

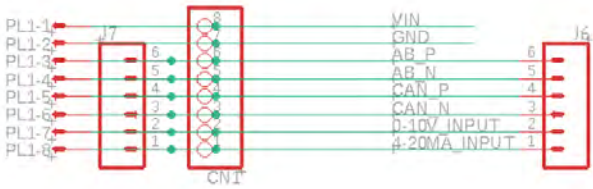

RS485 - I/O Card

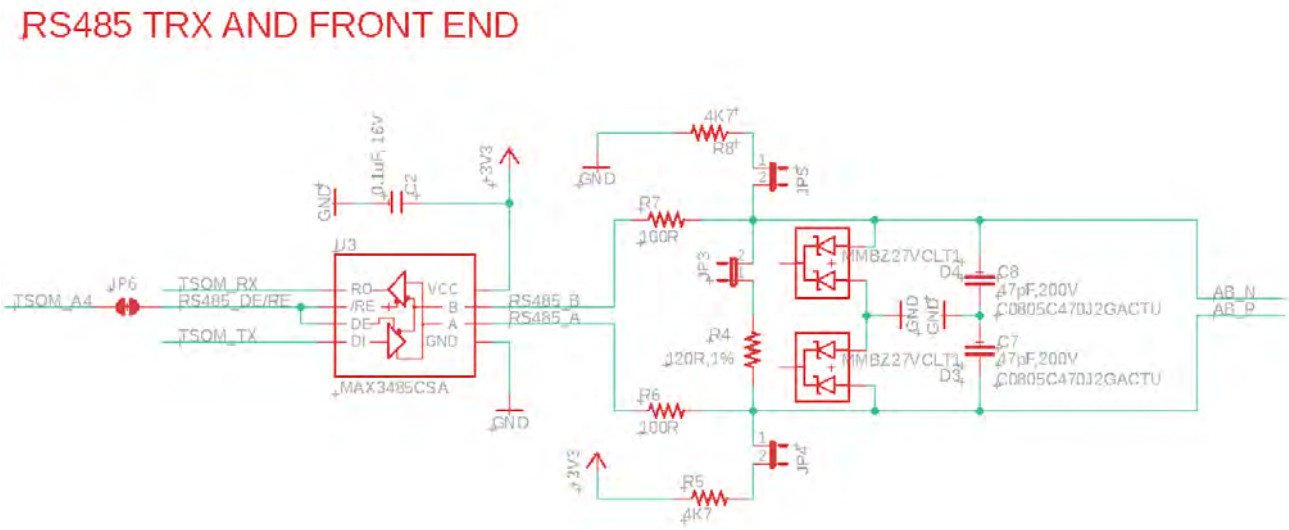

CAN - I/O Card

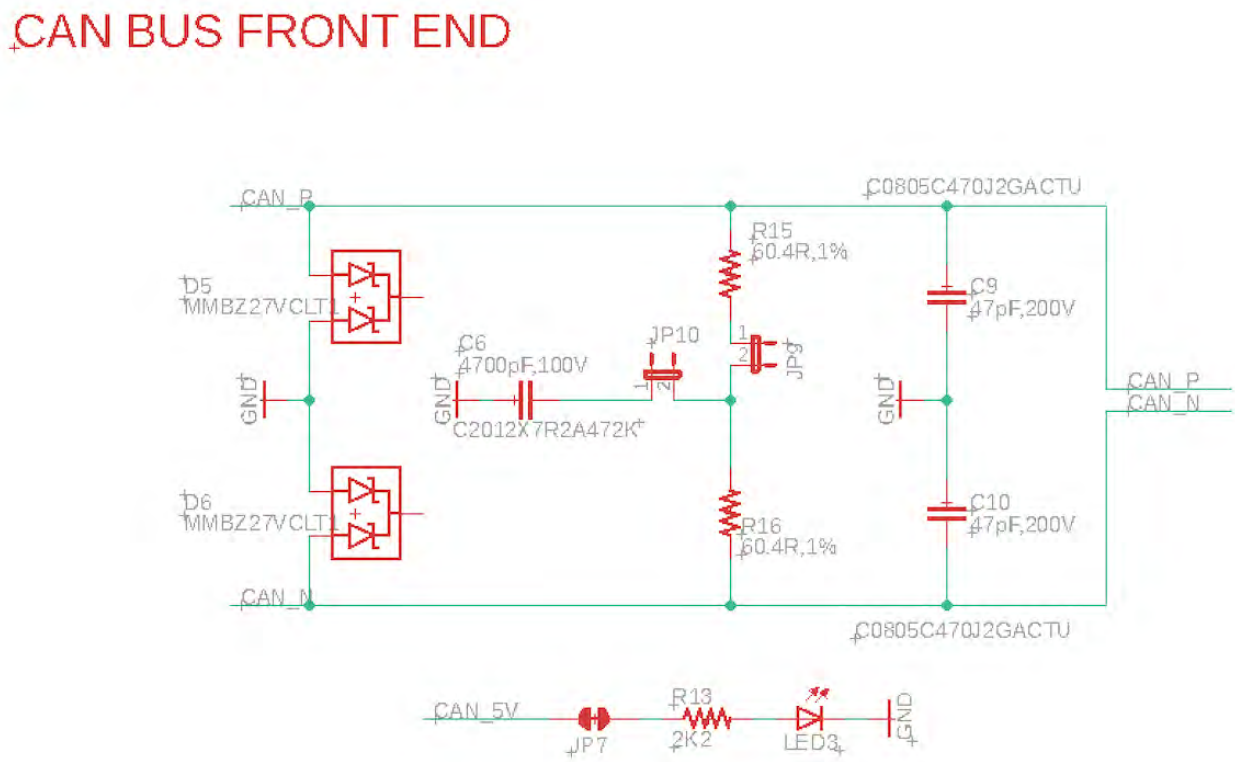

4-20mA - I/O Card

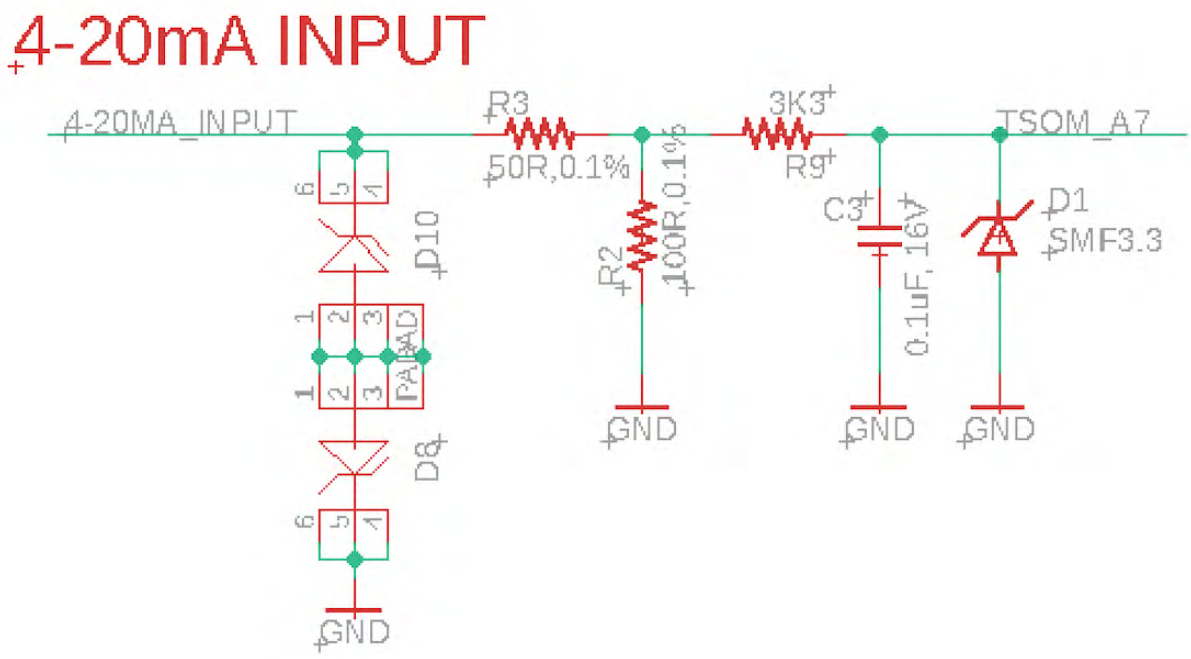
4-20mA INPUT
4-20MA_INPUT
R3
50R,0.1%
3K3
R9
TSOM_A7
D10
R2
100R,0.1%
C3
0.1uF, 16V
D1
SMF3.3
D8
GND
GND
GND
GND

0-10V - I/O Card

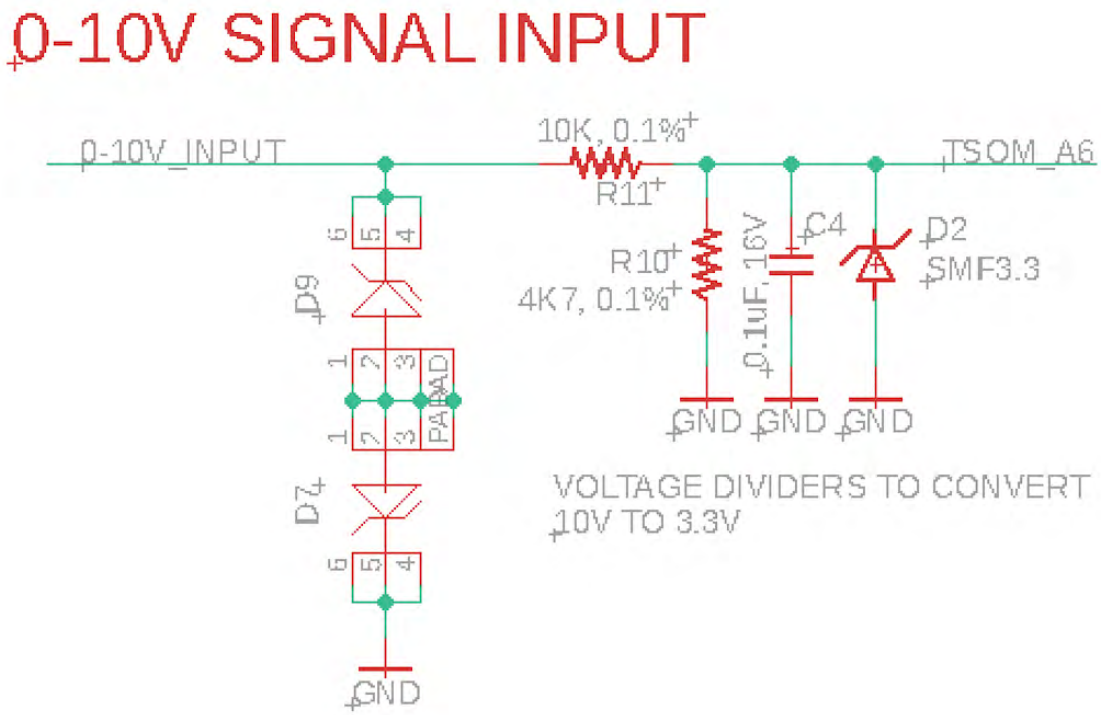
0-10V SIGNAL INPUT
0-10V_INPUT
10K, 0.1%
R11
TSOM_A6
D9
R10
4K7, 0.1%
0.1uF, 16V
C4
D2
SMF3.3
D7
GND
GND
GND
GND
VOLTAGE DIVIDERS TO CONVERT
10V TO 3.3V

Slow signal input - I/O Card

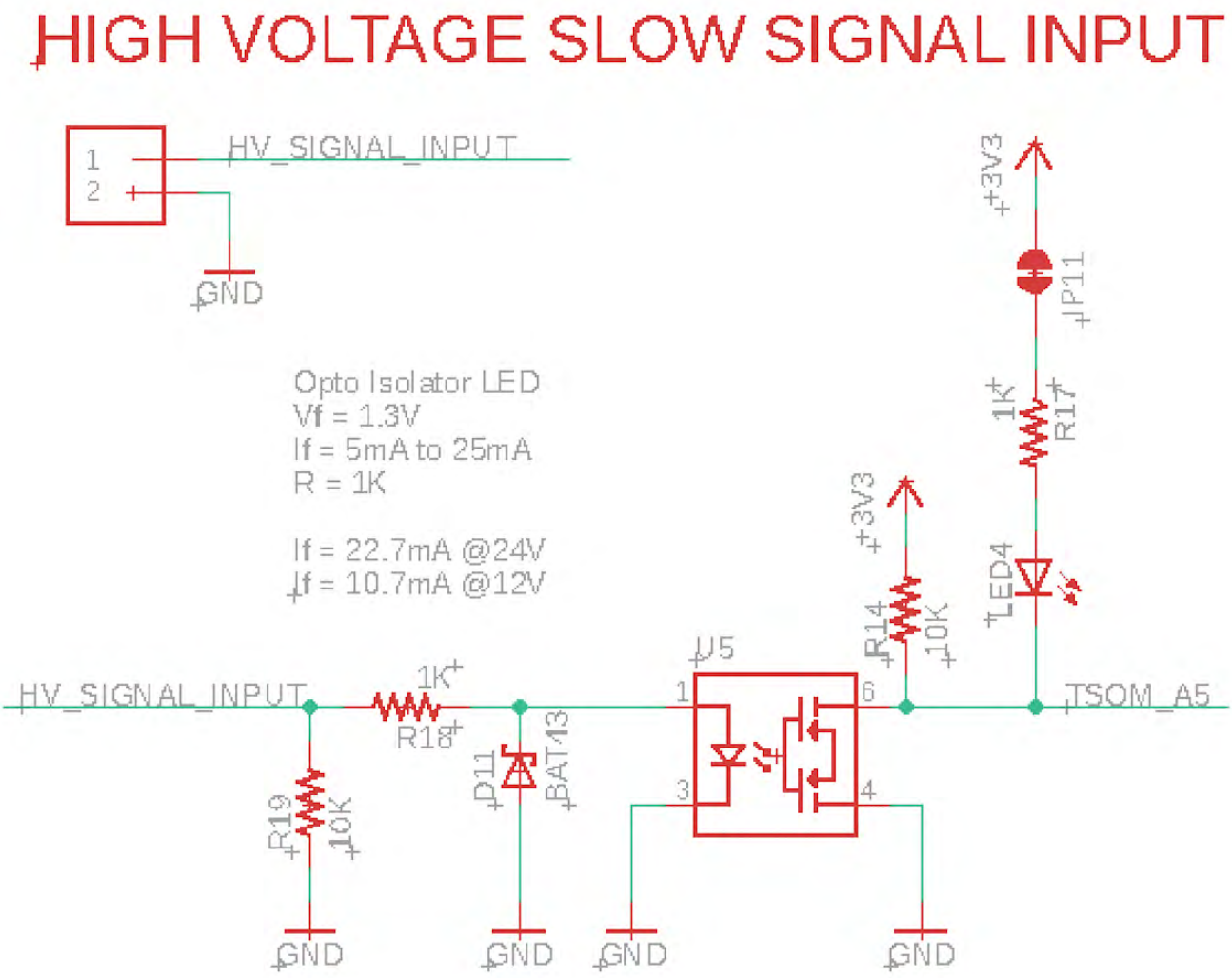

Relay - I/O Card

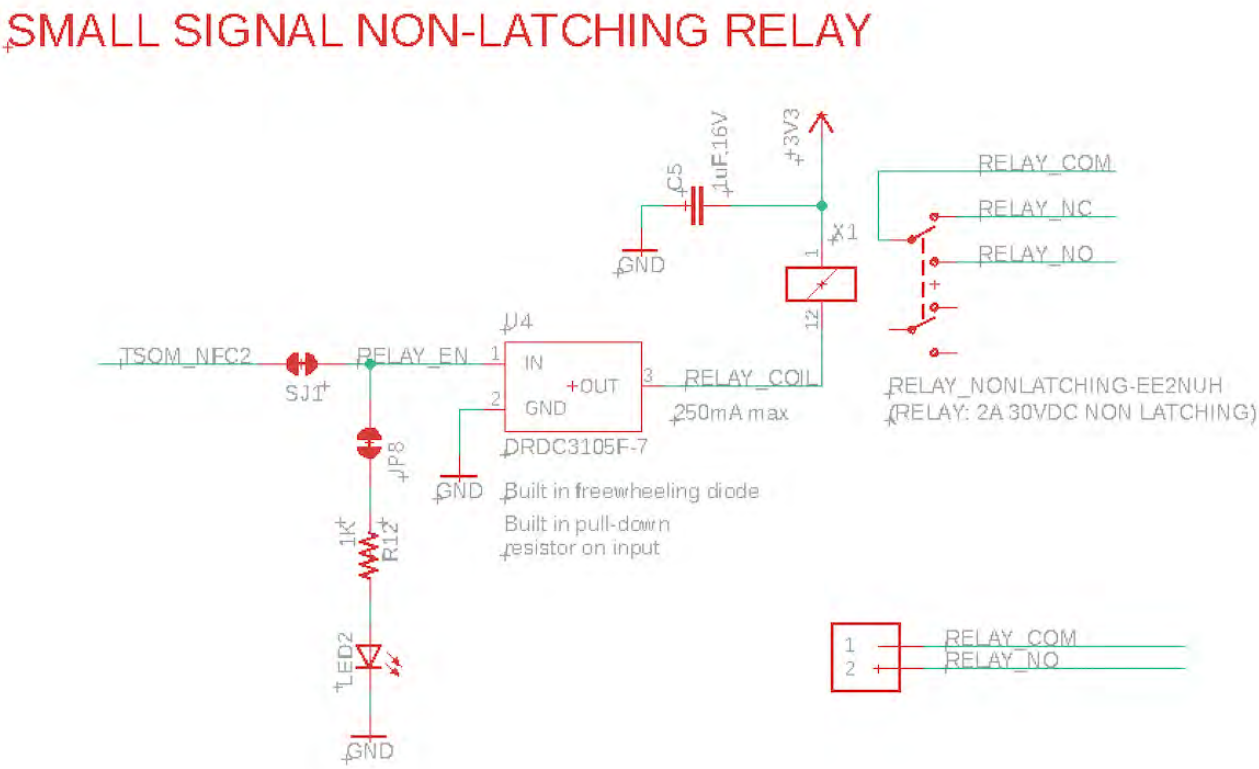

EEPROM - I/O Card

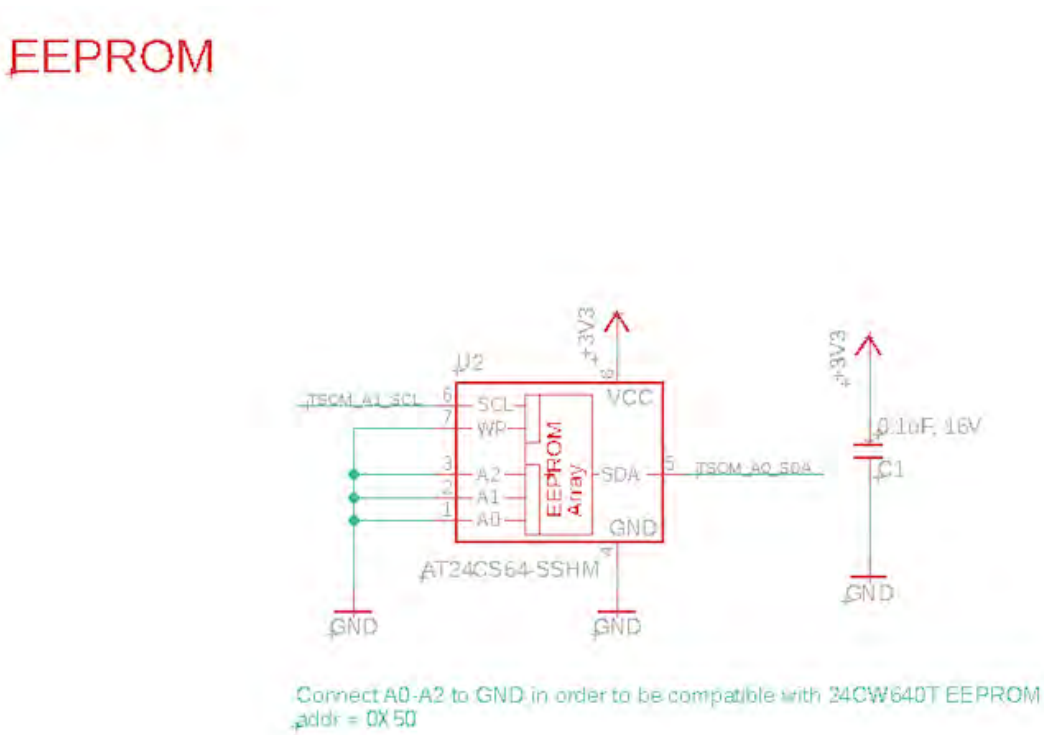

Board layout - I/O Card

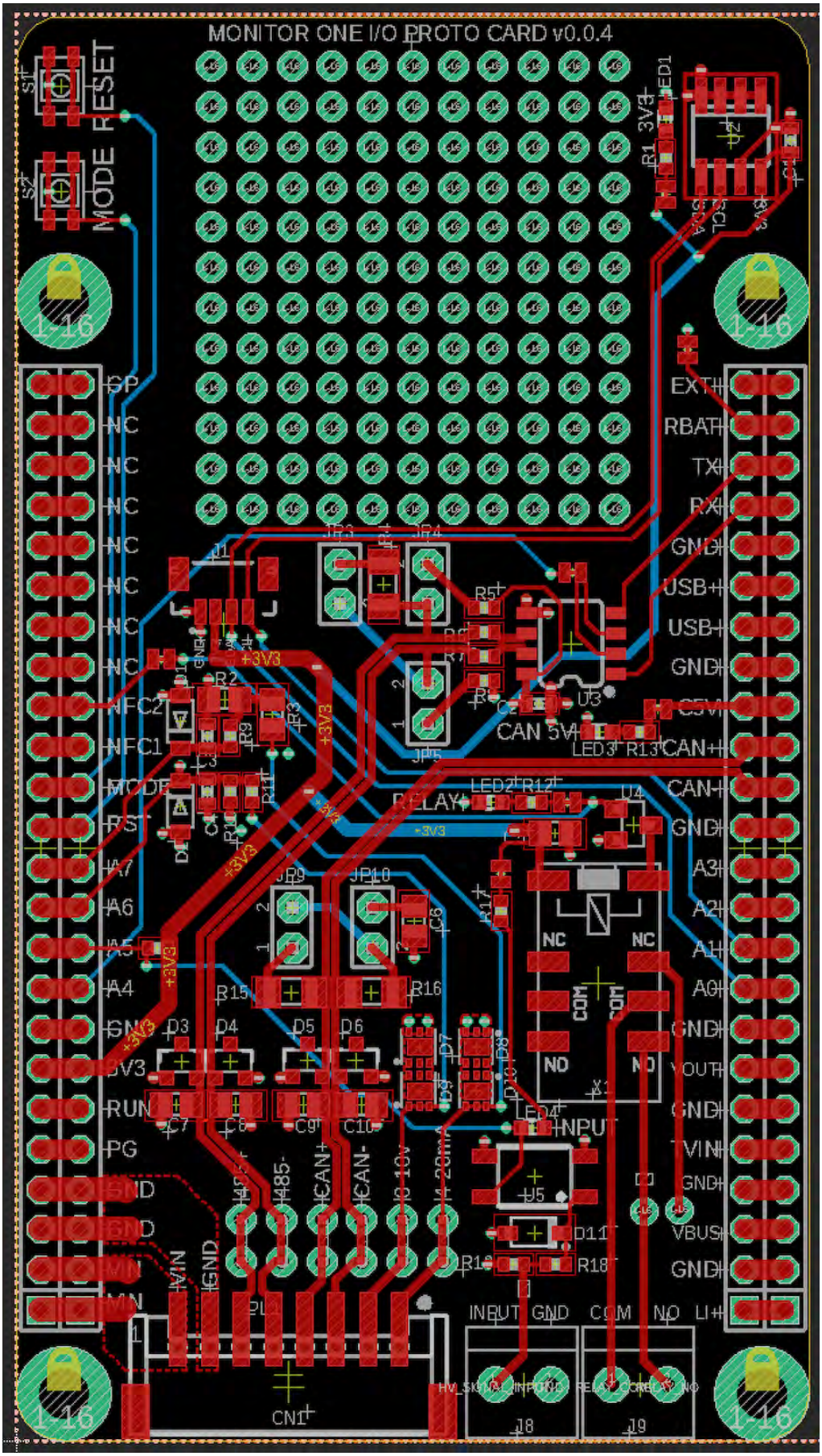

Prototype Card

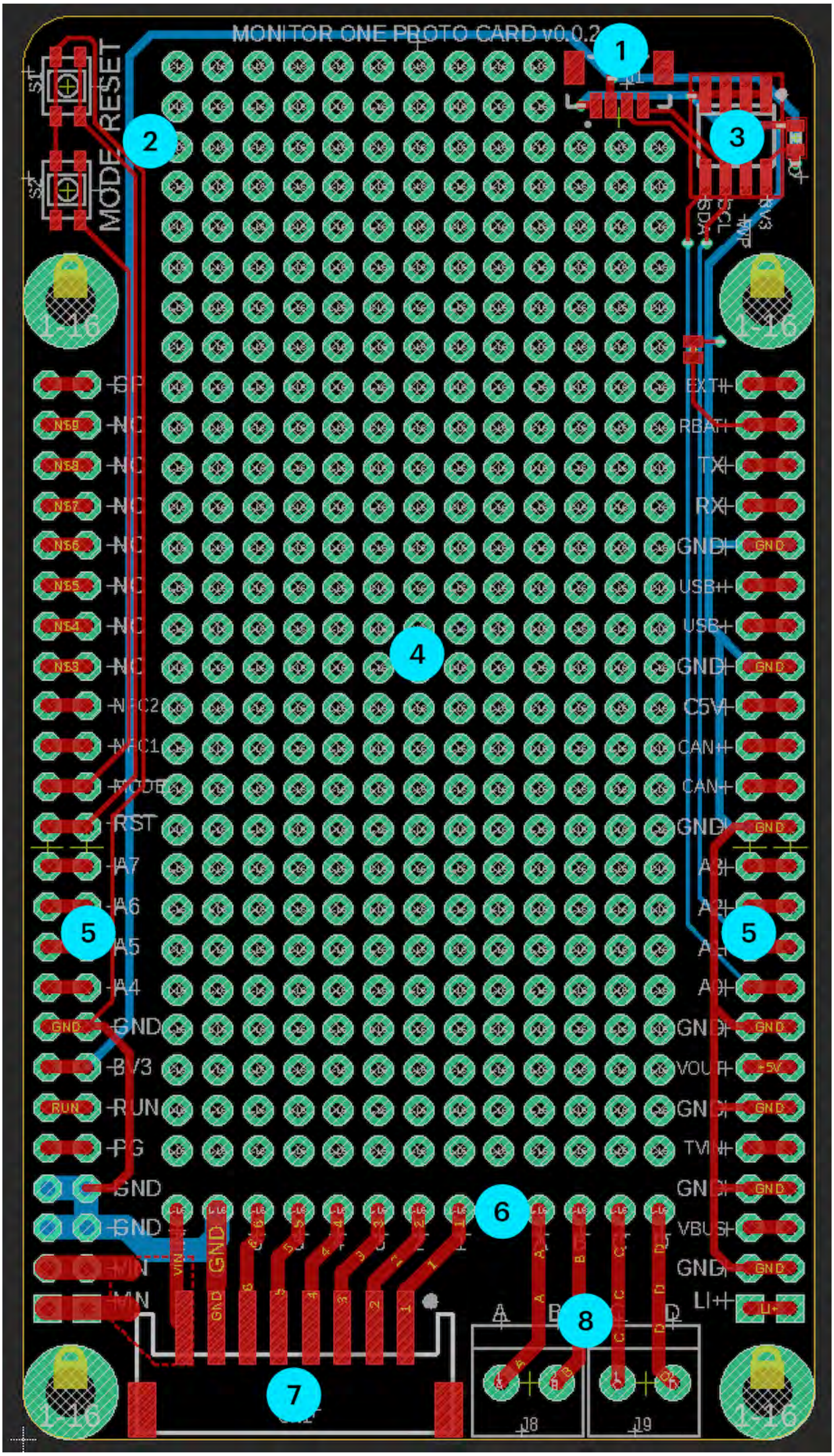

Label	Feature
1	QWIIC (I2C) connector
2	RESET and MODE buttons
3	EEPROM
4	Prototyping area
5	Access to expansion port signals
6	Access to bulkhead connector signals
7	B8B-PH connector, connect to M12 8-pin
8	Screw terminals, connect to M12 4-pin

B8B-PH connector

The left connector (7) attaches to the M12 8-pin connector with a short adapter cable. You don't have to use this cable setup, but it's often convenient to do so.

- Connector: JST B8B-PH (right angle)
- Mates with: JST PHR-8

Connector B8B-PH	Color	M12 Pin	Function
8	2	Red	VIN (6-30 VDC)
7	8	Black	Ground
6	6	Pink	
5	5	Gray	
4	1	White	
3	7	Blue	
2	4	Yellow	
1	3	Green	

- We recommend that you keep pin 8 (VIN) and pin 7 (GND) is the same positions.
- Other pins can be used as desired.
- The pins on the board layout are numbered 8 - 1 left to right, opposite of how the pins on the cable are numbered.

Screw terminals

Screw Terminal	Color	M12 Pin
A	Red	1
B	Black	3
C	Green	2
D	Blue	4

- The order of these pins isn't significant, but this is how the I/O Card is wired, so it probably best to be consistent.

Schematics - Prototyping Card

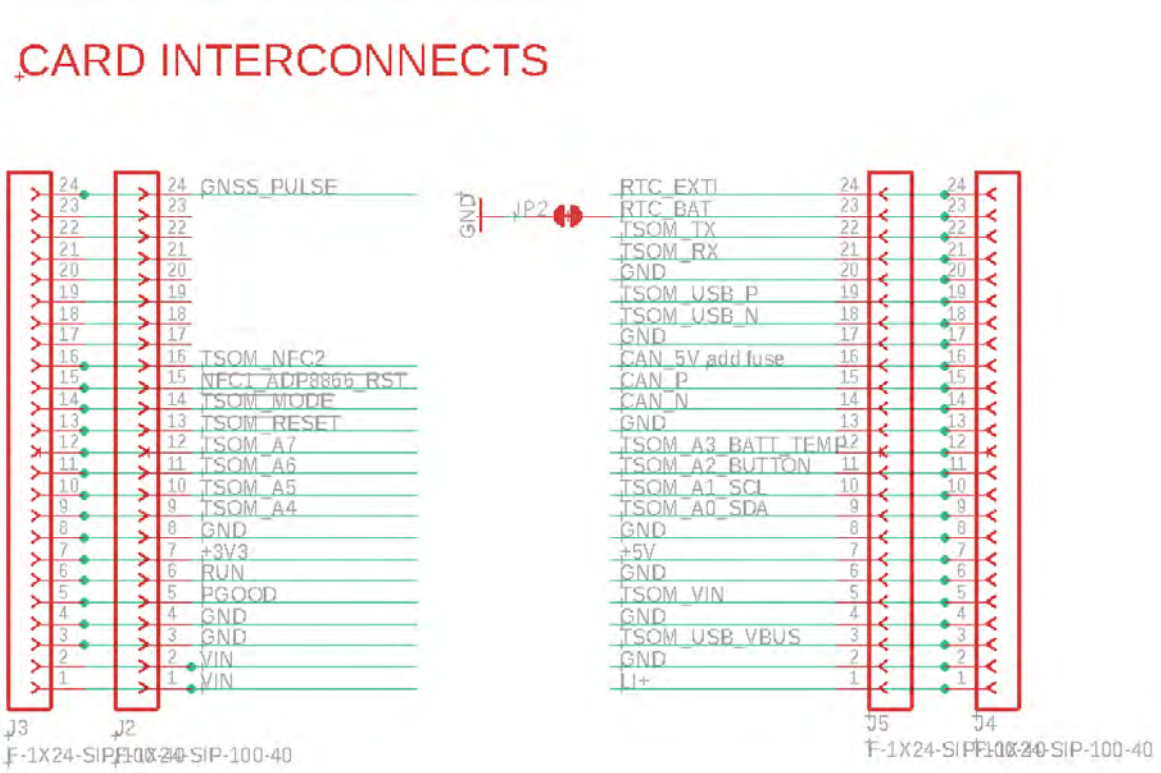

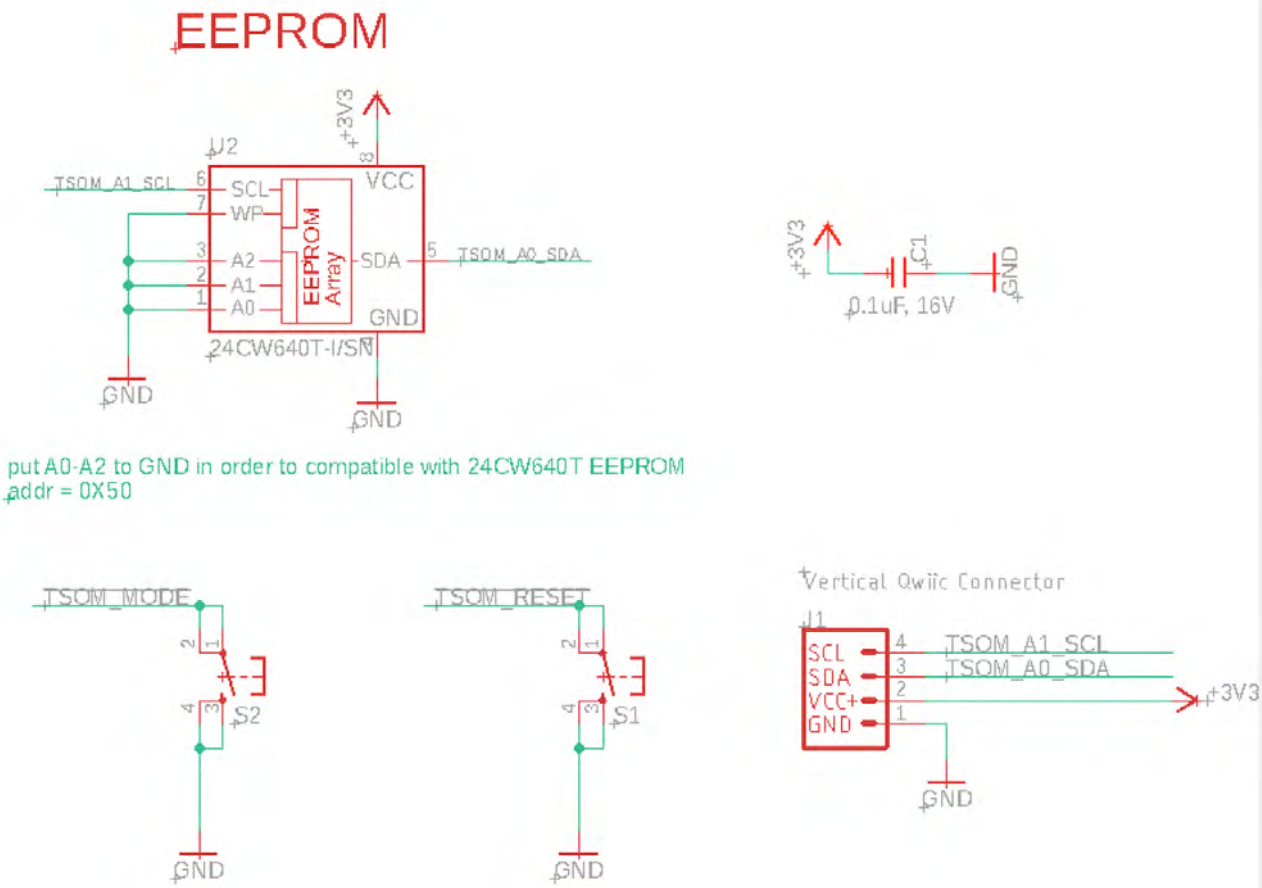
EEPROM
+3V3
U2
TSOM_A1_SCL
SCL
WP
A2
A1
A0
VCC
SDA
GND
EEPROM Array
TSOM_A0_SDA
24CW640T-I/SN
GND
GND
+3V3
C1
0.1uF, 16V
GND
put A0-A2 to GND in order to compatible with 24CW640T EEPROM
addr = 0X50
TSOM_MODE
S2
GND
TSOM_RESET
S1
GND
Vertical Qwiic Connector
J1
SCL
SDA
VCC+
GND
TSOM_A1_SCL
TSOM_A0_SDA
+3V3
GND

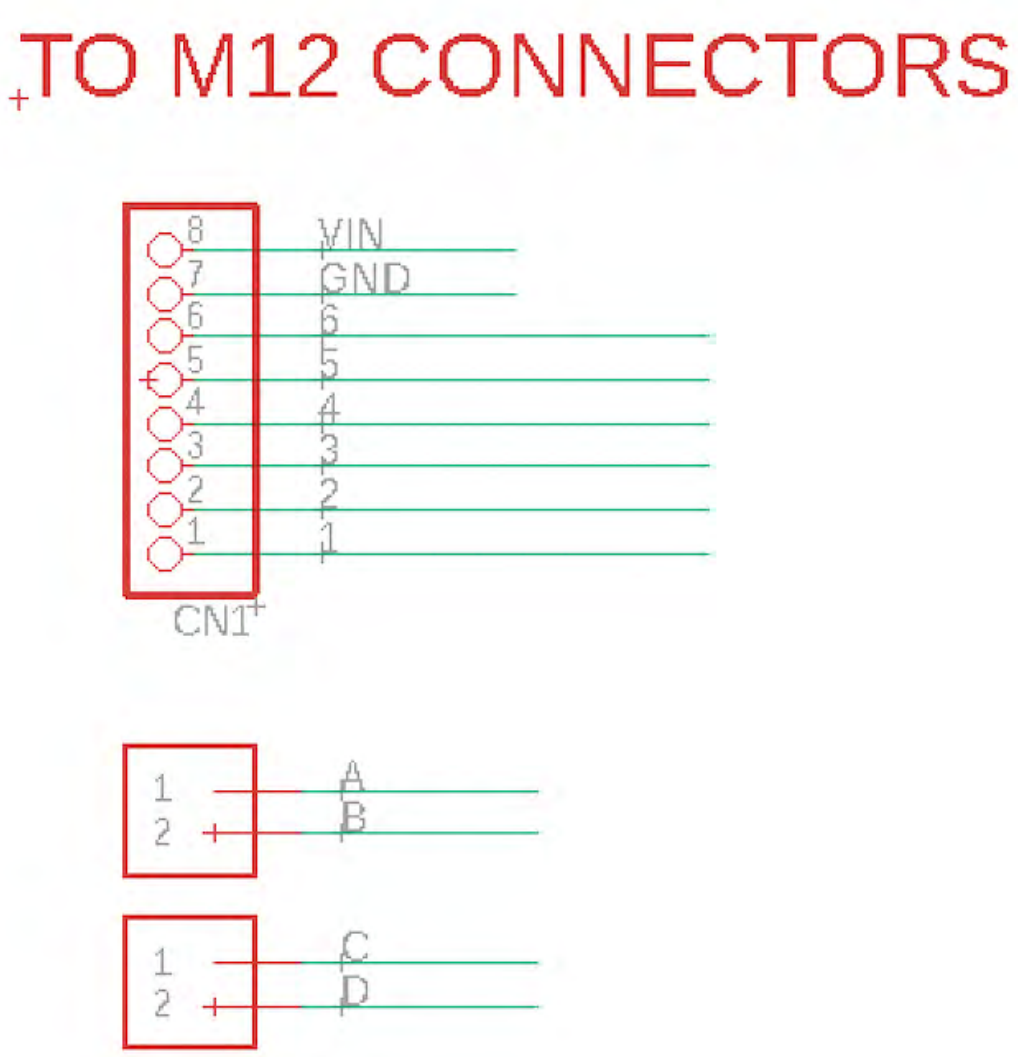

The Eagle CAD schematic and board layout files for the prototype can be found in the Monitor One Github repository.

Expansion card interface

- Expansion card size: 50mm x 90mm (approximately 2" x 3.5")
- Connectors: 24-pin 0.1" headers (two, one on each long side)
- Male header pins on the bottom of expansion card
- Attachment: 4 screws to standoffs (M3 screw recommended)

Pre-built expansion cards will be available, including the Prototype Card. You can also design and fabricate your own.

If you are building your own card, you can start with the design for the I/O card or prototype card. The Eagle CAD schematic and board layout files can be found in Monitor One Github repository.

Expansion card pinout

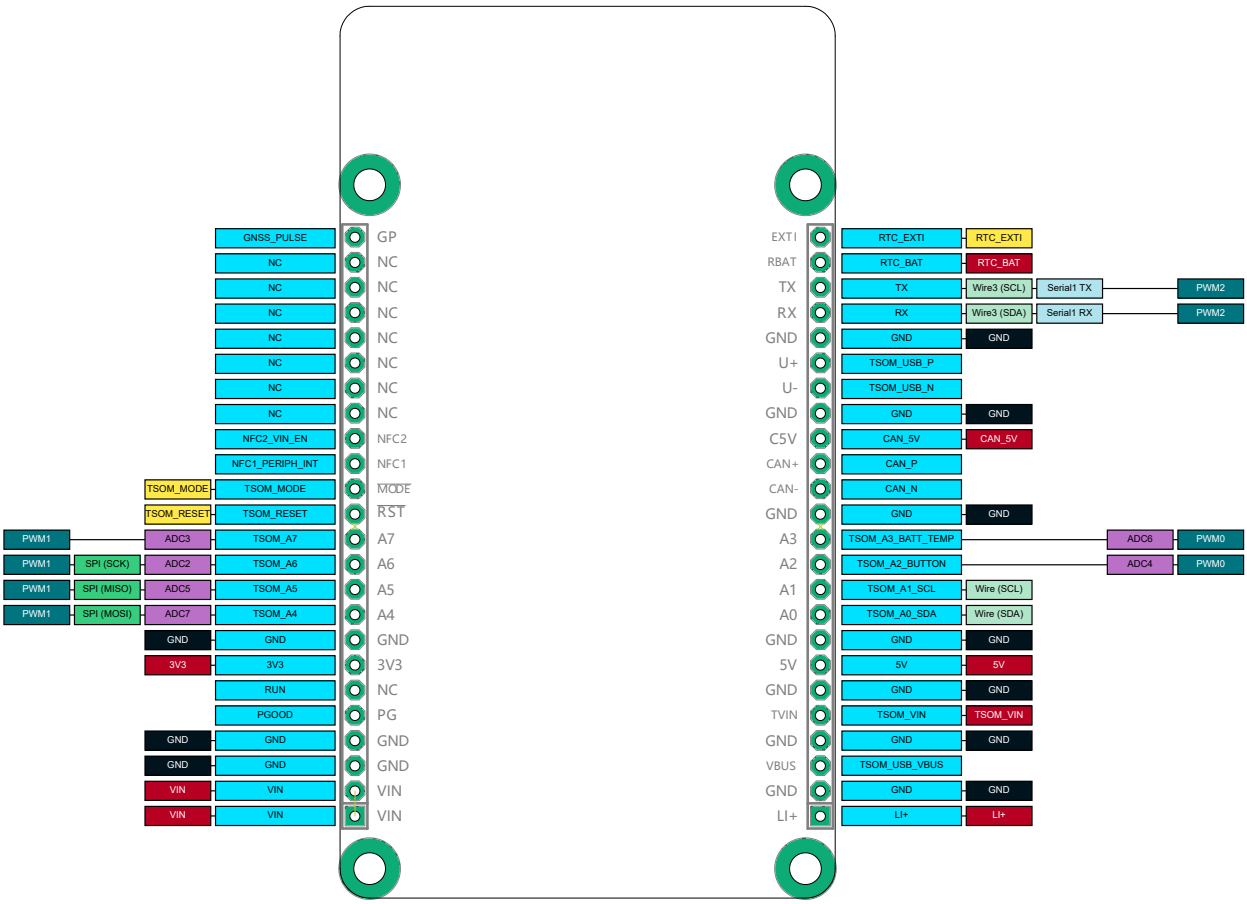

Expansion card dimensions

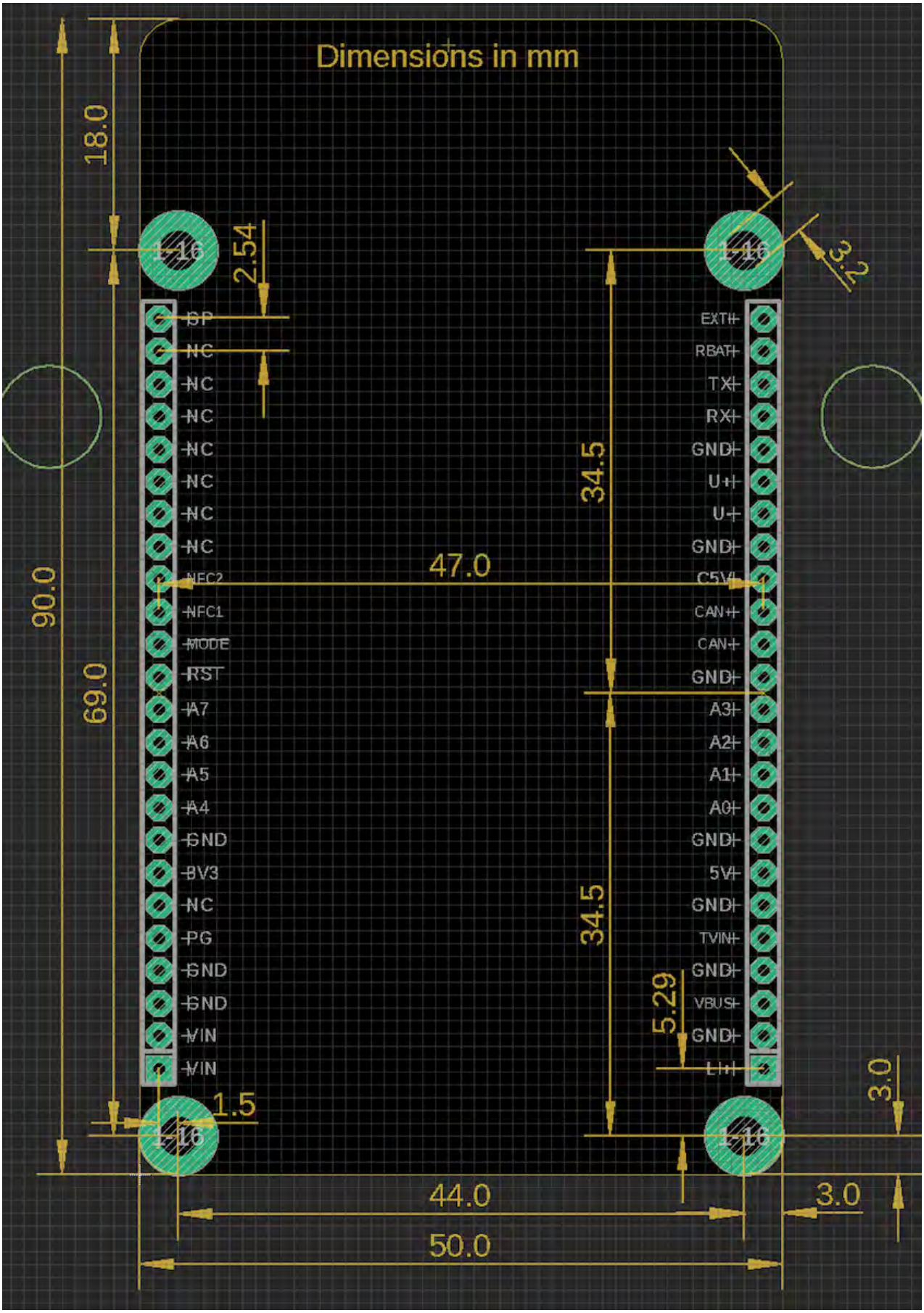

Expansion card location

Label	Feature
14	Expansion card to external connector cable (M12 to PHR8)
17	Expansion card external connector #1 (M12, 8-pin)
22	Location of expansion card (green outline)

The enclosure typically has a panel-mount M12 8 pin female connector in location 17 in the picture above. This is connected via a short cable to a PHR-8 female connector that attaches to your expansion card. The picture above shows the cable but a board is not installed in the picture.

The functions of the pins on the M12 8-pin connector are dependent on your base board, but the

following pinouts are recommended:

Conn P1 (M12)	Conn P2 (PHR-8)	Color	Function
2	1	Red	VIN (6-30 VDC)
8	2	Black	Ground
6	3	Pink	RS485_P
5	4	Gray	RS485_N
1	5	White	CAN_P
7	6	Blue	CAN_N
4	7	Yellow	0-10V input
3	8	Green	4-20mA input
Round	Rectangular		
Enclosure	Expansion Card		

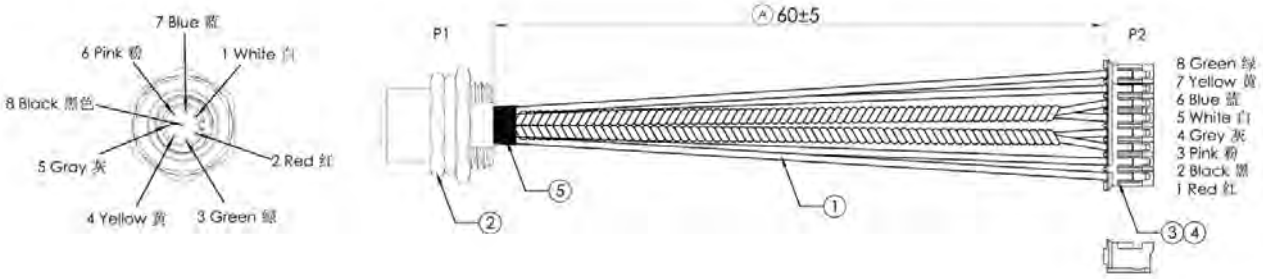

Cable length: 60 ±5 mm
Wire gauge: 24 AWG
M12 8-pin connector, A-coded

M12 connectors

The standard M12 connectors are IP67 waterproof (connected or not), 12 mm in diameter, and have 8 pins or 4 pins. However, M12 connectors are available from 2 pin to 17 pins. The connectors with smaller numbers of pins often have higher voltage and current ratings.

The panel-mount 8-pin connector on the Monitor One is female, with the following pinout:

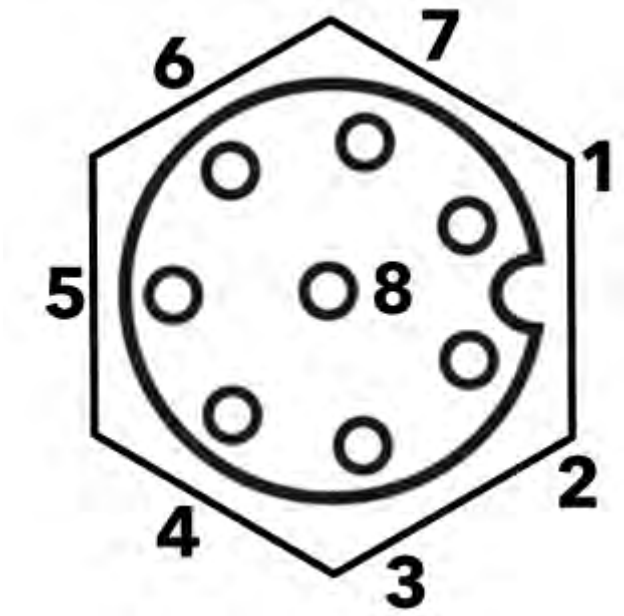

Looking at the bulkhead connector from outside the enclosure

The panel mount M12 8-pin connector fits in the following hole in the enclosure:

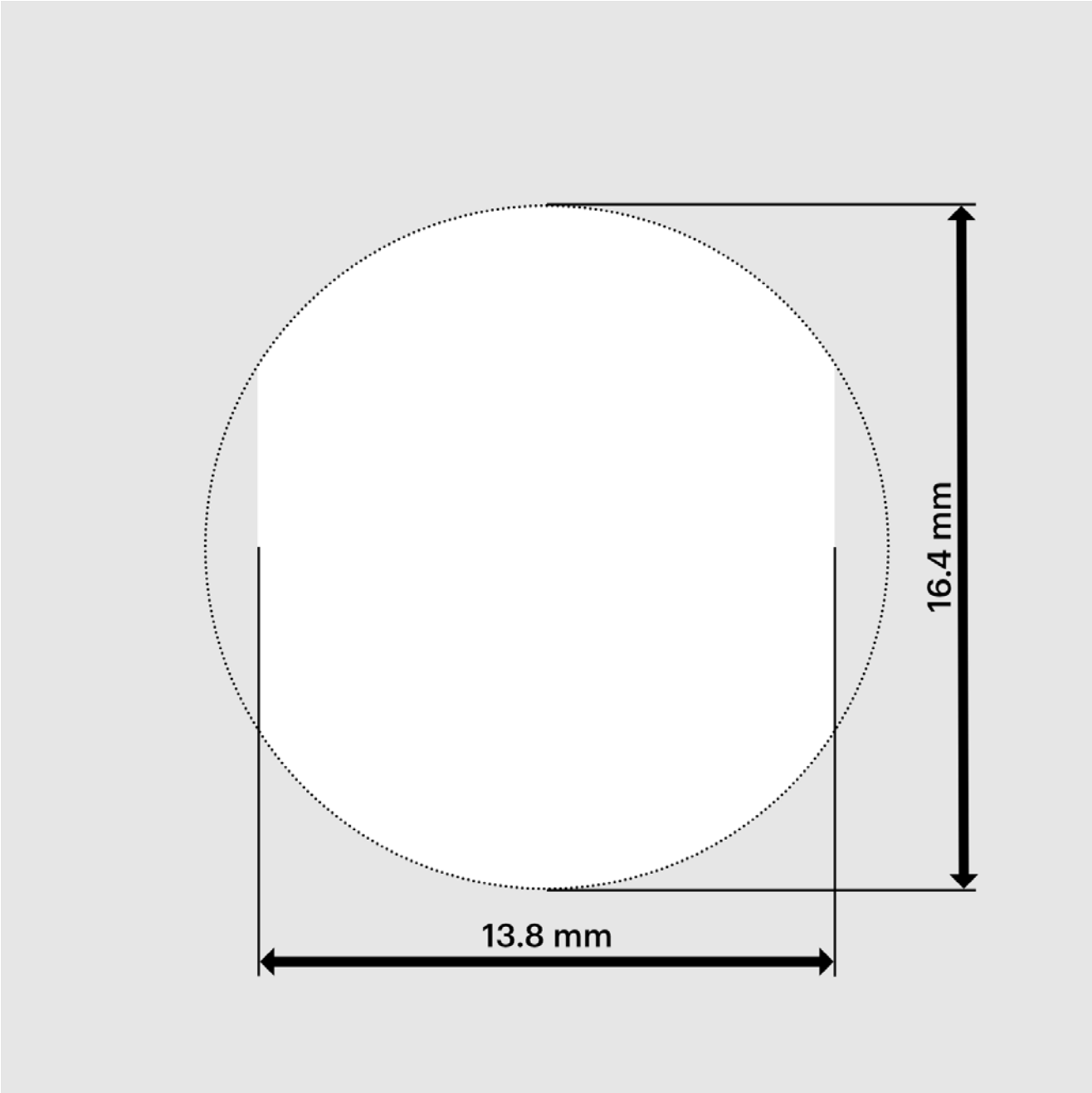

GPIO

Pin Name	Description	SoM Pin	MCU
NFC2_VIN_EN	GPIO (used for relay on I/O Card)	27	P0.10
NFC1_PERIPH_INT	Peripheral interrupt (active low)	26	P0.09
TSOM_A7 / D7	A7 Analog in, GPIO D7, PWM, SPI SS, WKP	38	P0.05
TSOM_A6 / D6	A6 Analog in, GPIO D6, PWM, SPI (SCK)	39	P0.04
TSOM_A5 / D5	A5 Analog in, GPIO D5, PWM, SPI MISO	40	P0.29
TSOM_A4 / D4	A4 Analog in, GPIO D4, PWM, SPI MOSI	41	P0.29
TSOM_A2_BUTTON / D2	External user button, A2 Analog in, GPIO D2, PWM	57	P0.28

Pin Name	Description	SoM Pin	MCU
TSOM_A3_BATT_TEMP / D3	Battery temperature sensor, A3 Analog in, GPIO D3, PWM	58	P0.30
RX / D9	Serial1 RX, GPIO D9, PWM, Wire3 SDA	71	P0.08
TX / D8	Serial1 TX, GPIO D8, PWM, Wire3 SCL	72	P0.06

On the Monitor One, pins A0 and A1 are used in I2C mode by the user RGB LED temperature sensor. Pins A0 and A1 cannot be used as GPIO.

On the Monitor One, you should not use A2 and A3 as GPIO or analog inputs as they are used by the external user button and battery temperature thermistor.

All GPIO are 3.3V and are not 5V tolerant.

When using the I/O Card:

Pin	Direction	Function
A4	Output	Direction control for RS485
A5	Digital Input	Slow signal input, optoisolated, 12V to 24V = HIGH
A6	Analog Input	Analog input, 0-10V, 10V=4095
A7	Analog Input	4-20mA, 4mA=0, 20mA=4095
NFC_PIN2	Output	Relay coil, HIGH = energized

ADC

Pin Name	Description	Interface	SoM Pin	MCU
TSOM_A7 / D7	A7 Analog in, GPIO D7, PWM, SPI SS, WKP	ADC3	38	P0.05
TSOM_A6 / D6	A6 Analog in, GPIO D6, PWM, SPI (SCK)	ADC2	39	P0.04
TSOM_A5 / D5	A5 Analog in, GPIO D5, PWM, SPI MISO	ADC5	40	P0.29
TSOM_A4 / D4	A4 Analog in, GPIO D4, PWM, SPI MOSI	ADC7	41	P0.29
TSOM_A2_BUTTON / D2	External user button, A2 Analog in, GPIO D2, PWM	ADC4	57	P0.28
TSOM_A3_BATT_TEMP / D3	Battery temperature sensor, A3 Analog in, GPIO D3, PWM	ADC6	58	P0.30

On the Monitor One, you should not use A2 and A3 as analog inputs as they are used by the external user button and battery temperature thermistor.

SPI

Pin Name	Description	Interface	SoM Pin	MCU
TSOM_A6 / D6	A6 Analog in, GPIO D6, PWM, SPI (SCK)	SPI (SCK)	39	P0.04
TSOM_A5 / D5	A5 Analog in, GPIO D5, PWM, SPI MISO	SPI (MISO)	40	P0.29
TSOM_A4 / D4	A4 Analog in, GPIO D4, PWM, SPI MOSI	SPI (MOSI)	41	P0.29

Any available GPIO can be used as a SPI CS/SS pin.

I2C

Pin Name	Description	Interface	SoM Pin	MCU
TSOM_A0_SDA / D0	Wire SDA	Wire (SDA)	55	P0.03
TSOM_A1_SCL / D1	Wire SCL	Wire (SCL)	56	P0.02
RX / D9	Serial1 RX, GPIO D9, PWM, Wire3 SDA	Wire3 (SDA)	71	P0.08
TX / D8	Serial1 TX, GPIO D8, PWM, Wire3 SCL	Wire3 (SCL)	72	P0.06

On the Monitor One, pins A0 and A1 are used in I2C mode by the user RGB LED and temperature sensor. Pins A0 and A1 cannot be used as GPIO.

On the Monitor One (and Tracker SoM), `Wire` and `Wire3` are two different I2C peripherals and can be used at the same time.

On the Monitor One (and Tracker SoM), `Wire3` and `Serial1` share the same pins and only one can be used at a time.

I2C is 3.3V only and is not 5V tolerant.

There are 4.7K pull-up resistors on `TSOM_A0_SDA` and `TSOM_A1_SCL` to 3.3V on the base board.

Serial (UART)

Pin Name	Description	Interface	SoM Pin	MCU
RX / D9	Serial1 RX, GPIO D9, PWM, Wire3 SDA	Serial1 RX	71	P0.08
TX / D8	Serial1 TX, GPIO D8, PWM, Wire3 SCL	Serial1 TX	72	P0.06

On the Monitor One (and Tracker SoM), `Wire3` and `Serial1` share the same pins and only one can be used at a time.

Hardware flow control is not available on the Monitor One.

Serial pins are 3.3V only and are not 5V tolerant.

Additional interface chips are required for other serial standards such as RS232 and RS485.

PWM

Pin Name	Description	Interface	SoM Pin	MCU
TSOM_A7 / D7	A7 Analog in, GPIO D7, PWM, SPI SS, WKP	PWM1	38	P0.05
TSOM_A6 / D6	A6 Analog in, GPIO D6, PWM, SPI (SCK)	PWM1	39	P0.04
TSOM_A5 / D5	A5 Analog in, GPIO D5, PWM, SPI MISO	PWM1	40	P0.29
TSOM_A4 / D4	A4 Analog in, GPIO D4, PWM, SPI MOSI	PWM1	41	P0.29
TSOM_A2_BUTTON / D2	External user button, A2 Analog in, GPIO D2, PWM	PWM0	57	P0.28
TSOM_A3_BATT_TEMP / D3	Battery temperature sensor, A3 Analog in, GPIO D3, PWM	PWM0	58	P0.30
RX / D9	Serial1 RX, GPIO D9, PWM, Wire3 SDA	PWM2	71	P0.08
TX / D8	Serial1 TX, GPIO D8, PWM, Wire3 SCL	PWM2	72	P0.06

On the Monitor One, you should not use A2 and A3 as PWM outputs as they are used by the external user button and battery temperature thermistor.

All pins on the same hardware timer (PWM0, PWM1, or PWM2) must share the same frequency but can have different duty cycles.

CAN

Pin Name	Description	Interface	SoM Pin
CAN_N	CAN Data- or CANL	CAN_N	64
CAN_P	CAN Data+ or CANH	CAN_P	65
CAN_5V	5V power out, 0.8A maximum. Can be controlled by software.	CAN_5V	66

The CAN transceiver is included on the Tracker SoM. However if you implement CAN on your expansion card, you will probably want to add protection circuitry. This circuit is present on the Monitor One CAN expansion card and also on the Tracker One.

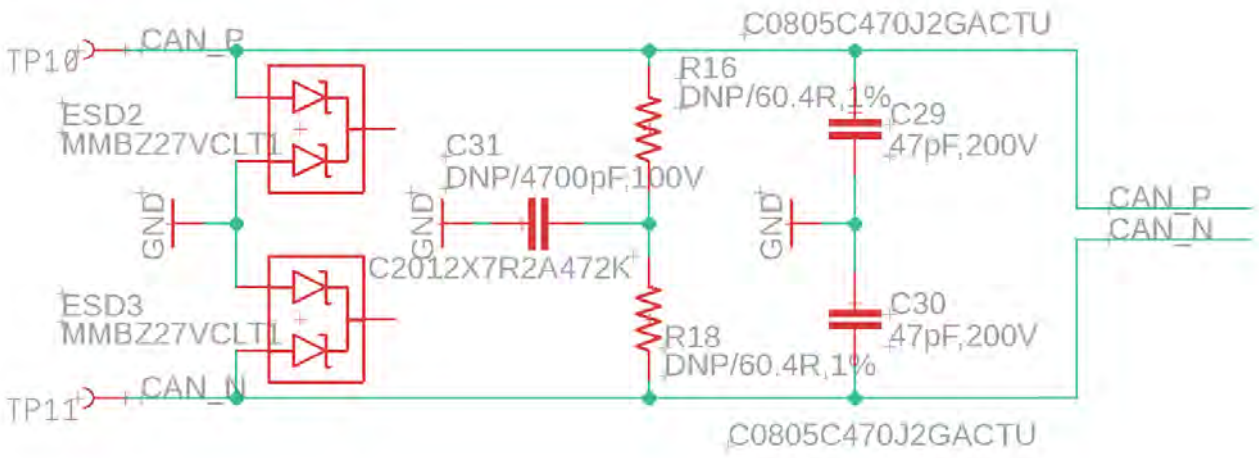

Note that the two 60.4 ohm resistors are DNP (do not populate). If populated, these provide the 120 ohm CAN termination, if you need it in your design.

All expansion card pins

Pin	Pin Name	Description	MCU
1	GNSS_PULSE	GNSS time pulse output. Can be used for a GPS fix LED.	
2	NC		
3	NC		
4	NC		
5	NC		
6	NC		
7	NC		
8	NC		
9	NFC2_VIN_EN	GPIO (used for relay on I/O Card)	P0.10
10	NFC1_PERIPH_INT	Peripheral interrupt (active low)	P0.09
11	TSOM_MODE	MODE button (active low)	P1.13
12	TSOM_RESET	RESET button (active low)	P0.08
13	TSOM_A7 / D7	A7 Analog in, GPIO D7, PWM, SPI SS, WKP	P0.05
14	TSOM_A6 / D6	A6 Analog in, GPIO D6, PWM, SPI (SCK)	P0.04
15	TSOM_A5 / D5	A5 Analog in, GPIO D5, PWM, SPI MISO	P0.29
16	TSOM_A4 / D4	A4 Analog in, GPIO D4, PWM, SPI MOSI	P0.29
17	GND	Ground.	
18	3V3	3.3V out, 1000 mA maximum including nRF52 and other peripherals.	
19	RUN	Pull low to disable LTC7103 regulator. Has 100K pull-up to VIN.	

Pin	Pin Name	Description	MCU
20	PGOOD	LTC7103 regulator open drain power good output. Pulled low when regulator is not in regulation.	
21	GND	Ground.	
22	GND	Ground.	
23	VIN	Power input, 6 - 90 VDC	
24	VIN	Power input, 6 - 90 VDC	
25	LI+	Connect to Li-Po battery. Can power the device or be recharged by VIN or VBUS.	
26	GND	Ground.	
27	TSOM_USB_VBUS	nRF52 USB power input. Can be used as a 5V power supply instead of VIN.	
28	GND	Ground.	
29	TSOM_VIN	Tracker SoM power input 5V-12V DC.	
30	GND	Ground.	
31	5V	5V power output when powered by VIN or USB	
32	GND	Ground.	
33	TSOM_A0_SDA / D0	Wire SDA	P0.03
34	TSOM_A1_SCL / D1	Wire SCL	P0.02
35	TSOM_A2_BUTTON / D2	External user button, A2 Analog in, GPIO D2, PWM	P0.28
36	TSOM_A3_BATT_TEMP / D3	Battery temperature sensor, A3 Analog in, GPIO D3, PWM	P0.30
37	GND	Ground.	
38	CAN_N	CAN Data- or CANL	
39	CAN_P	CAN Data+ or CANH	
40	CAN_5V	5V power out, 0.8A maximum. Can be controlled by software.	
41	GND	Ground.	
42	TSOM_USB_N	nRF52 MCU USB interface D-.	
43	TSOM_USB_P	nRF52 MCU USB interface D+.	
44	GND	Ground.	
45	RX / D9	Serial1 RX, GPIO D9, PWM, Wire3 SDA	P0.08
46	TX / D8	Serial1 TX, GPIO D8, PWM, Wire3 SCL	P0.06
47	RTC_BAT	RTC/Watchdog battery +. Connect to GND if not using.	
48	RTC_EXTI	RTC EXTI. Can use as a wake button. Has 100K weak pull-up to 3V3.	

Pins 9 and 10 have NFC in the name from the Tracker SoM, however NFC cannot be used on the Monitor One as the pins must be used as `VIN_EN` and `PERIPH_INT`.

I/O characteristics

The GPIO pins on the expansion connector have the following specifications, from the nRF52840 datasheet:

Symbol	Parameter	Min	Typ	Max	Unit
VIH	Input high voltage	0.7 xVDD		VDD	V
VIL	Input low voltage	VSS		0.3 xVDD	V
VOH,SD	Output high voltage, standard drive, 0.5 mA, VDD ≥1.7	VDD - 0.4		VDD	V
VOH,HDH	Output high voltage, high drive, 5 mA, VDD >= 2.7 V	VDD - 0.4		VDD	V
VOH,HDL	Output high voltage, high drive, 3 mA, VDD >= 1.7 V	VDD - 0.4		VDD	V
VOL,SD	Output low voltage, standard drive, 0.5 mA, VDD ≥1.7	VSS		VSS + 0.4	V
VOL,HDH	Output low voltage, high drive, 5 mA, VDD >= 2.7 V	VSS		VSS + 0.4	V
VOL,HDL	Output low voltage, high drive,3 mA, VDD >= 1.7 V	VSS		VSS + 0.4	V
IOL,SD	Current at VSS+0.4 V, output set low, standard drive, VDD≥1.7	1	2	4	mA
IOL,HDH	Current at VSS+0.4 V, output set low, high drive, VDD >= 2.7V	6	10	15	mA
IOL,HDL	Current at VSS+0.4 V, output set low, high drive, VDD >= 1.7V	3			mA
IOH,SD	Current at VDD-0.4 V, output set high, standard drive, VDD≥1.7	1	2	4	mA
IOH,HDH	Current at VDD-0.4 V, output set high, high drive, VDD >= 2.7V	6	9	14	mA
IOH,HDL	Current at VDD-0.4 V, output set high, high drive, VDD >= 1.7V	3			mA
RPU	Pull-up resistance	11	13	16	kΩ
RPD	Pull-down resistance	11	13	16	kΩ

GPIO default to standard drive (2mA) but can be reconfigured to high drive (9mA) in Device OS 2.0.0 and later using the `pinSetDriveStrength()` function.

GPIO and port leakage current warning

Be careful when you are connecting GPIO or ports such as serial that may have power when the Monitor One is not powered, such as when using shipping mode.

If you have current flowing into GPIO or ports of the nRF52840 when it is powered down, it can cause it to enter a state where it cannot be reawaked without removing all power from it, including the internal LiPo battery. This may be difficult if you've sealed your Monitor One enclosure.

The Tracker One has a TI TS3A5018 Quad SPDT Analog Switch on the three GPIO pins (A3, D9/RX/SDA, D8/TX/SCL) to prevent this. The switch is normally open, and is closed when the `CAN_5V` is powered. By default, Tracker Edge enables `CAN_5V` when in normal operating mode and turns it off during sleep, however this behavior can be changed by using `enableIoCanPower()` and `enableIoCanPowerSleep()` in the `TrackerConfiguration` object.

The Tracker One circuit looks like this, and you may want to implement something similar if you are in a scenario where you have externally powered peripherals.

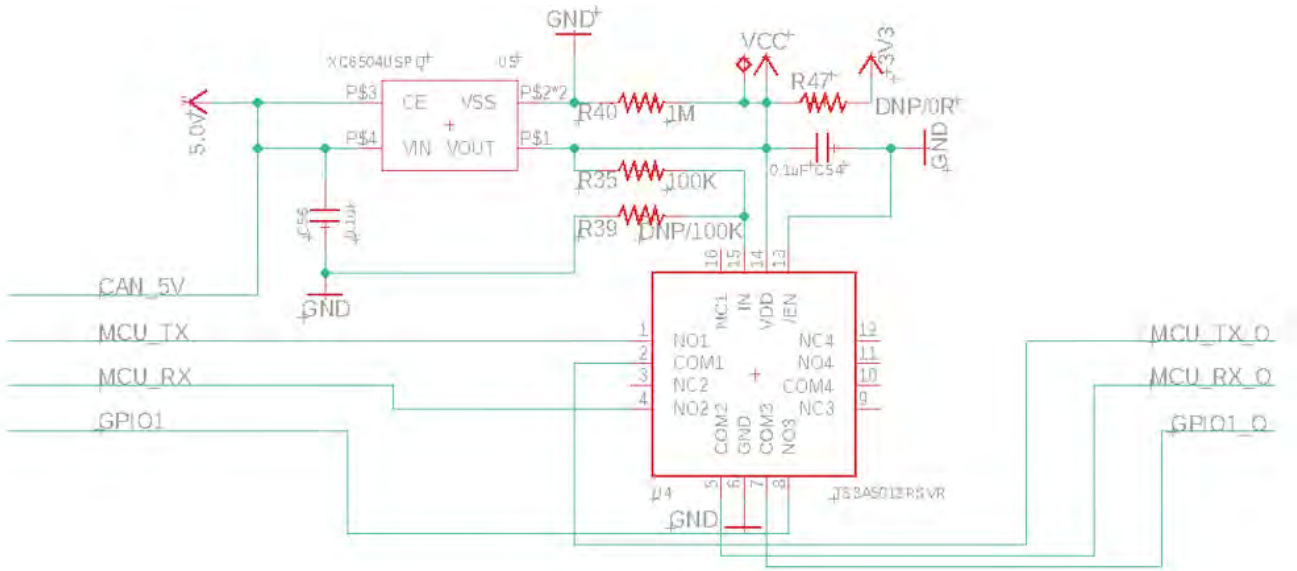

This is not necessary if your external peripherals are powered by 3V3 or CAN_5V.

VIN disable

By default, if power is applied at the VIN pin it will be used to power the Monitor One and charge the built-in battery.

If you are supplying VIN from another, larger battery pack, and want to be able to disconnect the VIN power supply to minimize current loss, you can do so using the following circuit in lieu of using NFC2 as the relay pin, as the I/O Card does.

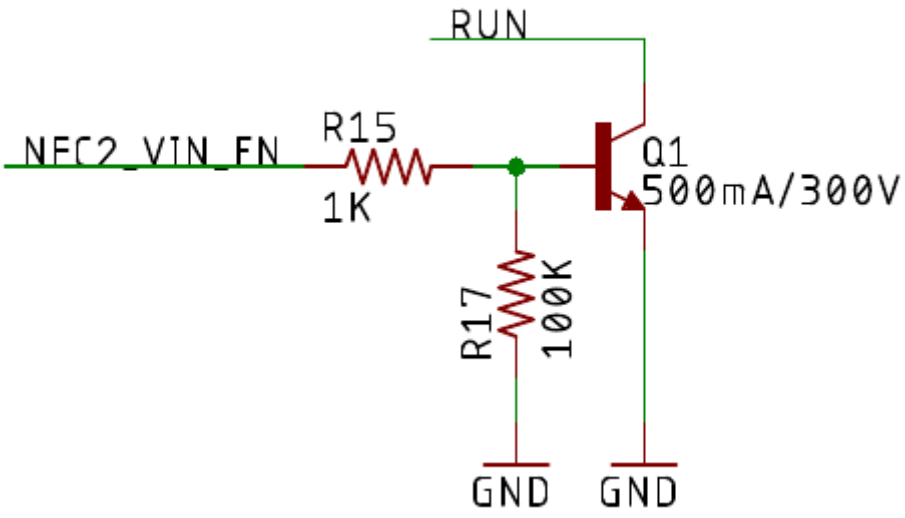

By disconnecting the VIN power supply, it reduces the current used by the VIN and PMIC voltage regulators. The Monitor One can still be powered by its internal LiPo battery. This is particularly advantageous if the Monitor One is in sleep mode while VIN is disconnected as the power supply loss will be large compared to the very low sleep current in this scenario.

GPIO and Ports vs. Tracker One

Pin	Monitor One	Tracker One
A0	I2C SDA[1]	Internal Thermistor
A1	I2C SCL[1]	User Button (not accessible)
A2	External Button	GNSS lock indicator
A3	Battery Temperature	M8 Analog in, GPIO
A4	Analog in, GPIO, PWM, SPI MOSI[1]	Not available
A5	Analog in, GPIO, PWM, SPI MISO[1]	Not available
A6	Analog in, GPIO, PWM, SPI SCK[1]	Not available
A7	Analog in, GPIO, PWM, SPI SS, WKP	Not available
TX	MCU serial TX, GPIO D8, Wire3 SCL[1]	MCU serial TX, GPIO D8, Wire3 SCL
RX	MCU serial RX, GPIO D9, Wire3 SDA[1]	MCU serial RX, GPIO D9, Wire3 SDA

[1]Available on expansion card connector (internal)

On the Monitor One, the expansion card connector allows the use the I2C, Serial, and SPI at the same time

On the Tracker One, you must choose between using the M8 for either serial or I2C. SPI is not available.

Tracker feature comparison

	Tracker SoM	Tracker M	Tracker One	Monitor One
Style	SMD Module	Module	All-in-one	All-in-one
Enclosure	Your design	Your design	Included	Included
MCU	nRF52840	RTL8721DM	nRF52840	nRF52840
CPU Speed	60 MHz	200 MHz	64 MHz	64 MHz
Maximum user binary	256 KB	2 MB	256 KB	256 KB
Flash file system[6]	4 MB	2 MB	4 MB	4 MB
Base board	Your design	Included	Included	Included
Expansion connector	Your design	8-pin	M8 8-pin	Multiple options
GNSS Antenna	Your design	Int/Ext[2]	Internal	Int/Ext[2]
Cellular Antenna	Your design	Int/Ext[2]	Internal	Int/Ext[2]
Wi-Fi geolocation antenna	Your design	Int/Ext[5]	Internal	Internal
BLE Antenna	Your design	Int/Ext[5]	Internal	Internal[4]
NFC Tag	Your design	n/a	Included	n/a
USB Connector	Your design	Micro B	USB C	Micro B (Int)[3]
System RGB LED	Your design	Included	Included	Included
External user button	n/a	n/a		✓
User RGB LEDs				2
SETUP and MODE buttons	Your design	On board	Inside Enclosure	Inside Enclosure
External power	3.9 - 17 VDC	6 - 90 VDC	6 - 30 VDC	6 - 90 VDC
SPI	✓	Expansion card	n/a	Expansion card
I2C	✓	Expansion card	M8	Expansion card
Serial	✓	Expansion card	M8	Expansion card
Internal temperature sensor	Your design	✓	✓	✓
Battery temperature sensor	n/a	✓	n/a	✓
Controlling charging by temperature	Your design	In hardware	In software	In software

[1]On the Tracker One, the M8 can be configured for GPIO, I2C (SDA and SCL), or Serial (RX and TX) on two pins.

[2]Both internal and external GNSS and cellular are supported by physically changing the antenna connector inside the enclosure.

[3]There is no external MCU USB connector on the Monitor One.

[4]The Monitor One uses the Tracker SoM BLE chip antenna on the board and does not include a separate BLE antenna, but one could be added using the BLE U.FL connector.

[5]The Tracker M uses a shared antenna for BLE and Wi-Fi geolocation. You can use the built-in trace antenna or an external 2.4 GHz/5 GHz dual-band antenna, selectable in software.

[6]A small portion of the flash file system is used by the system, and a configurable portion can be used for store and forward, to optionally allow location publishes to be saved when the device is offline to be uploaded later. The remainder of the flash file system can be used by user applications.

Schematics

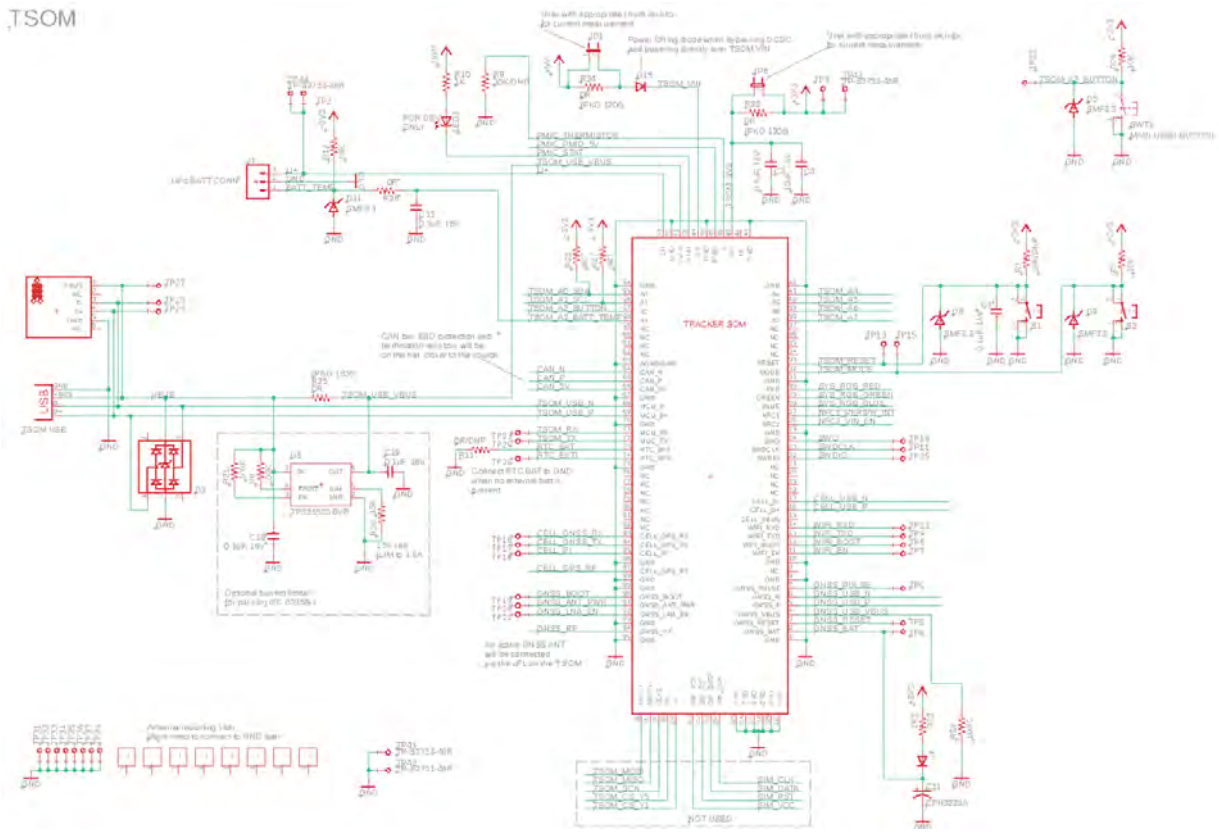

MAIN DCDC REGULATOR

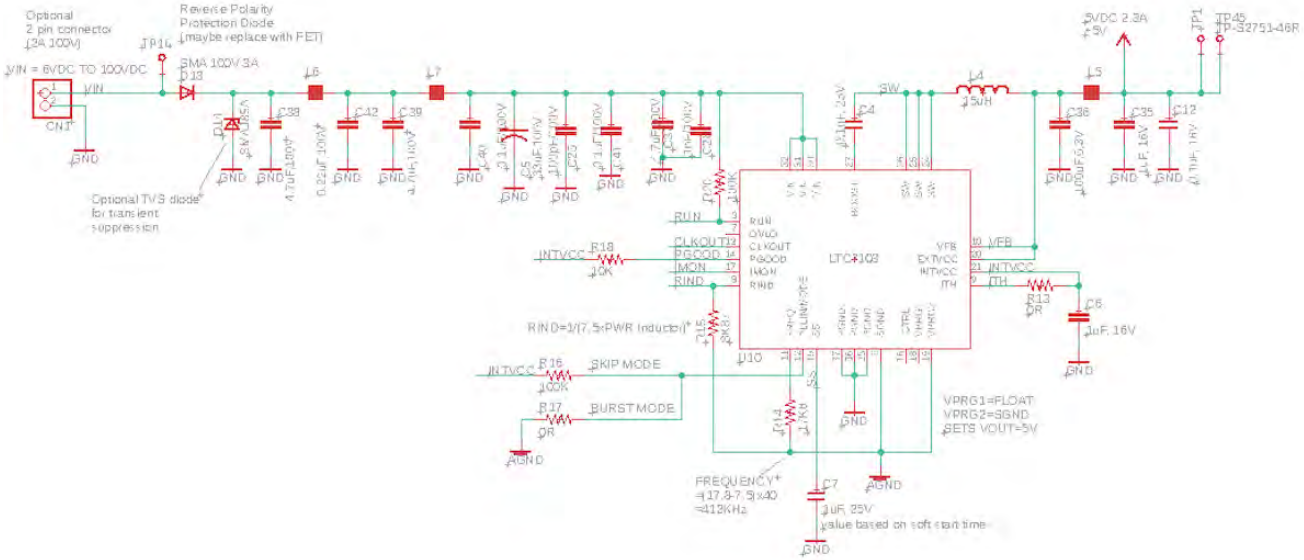

HAT INTERFACE

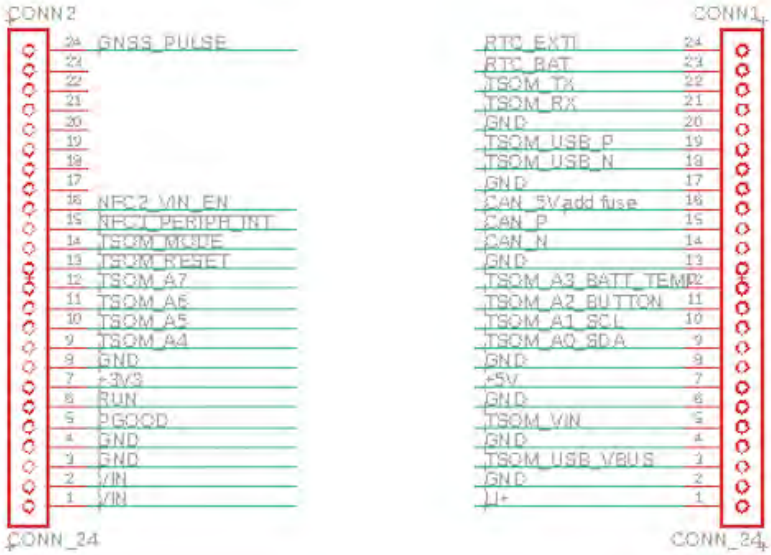

USER RGB DRIVER

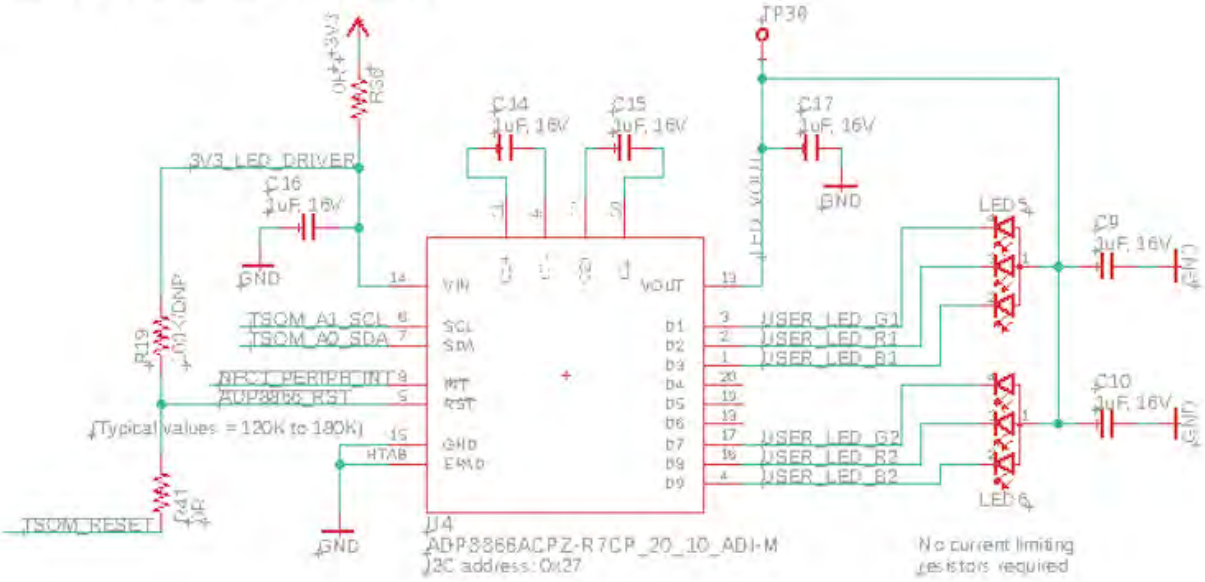

LONG PRESS TO RESET

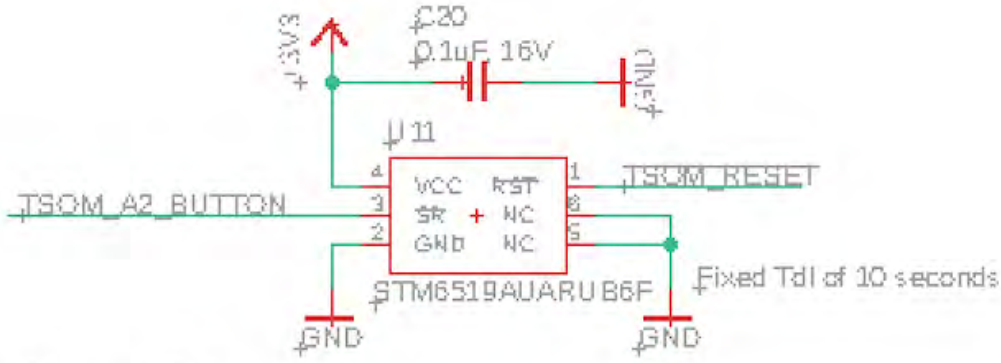

Place either U11 or U12

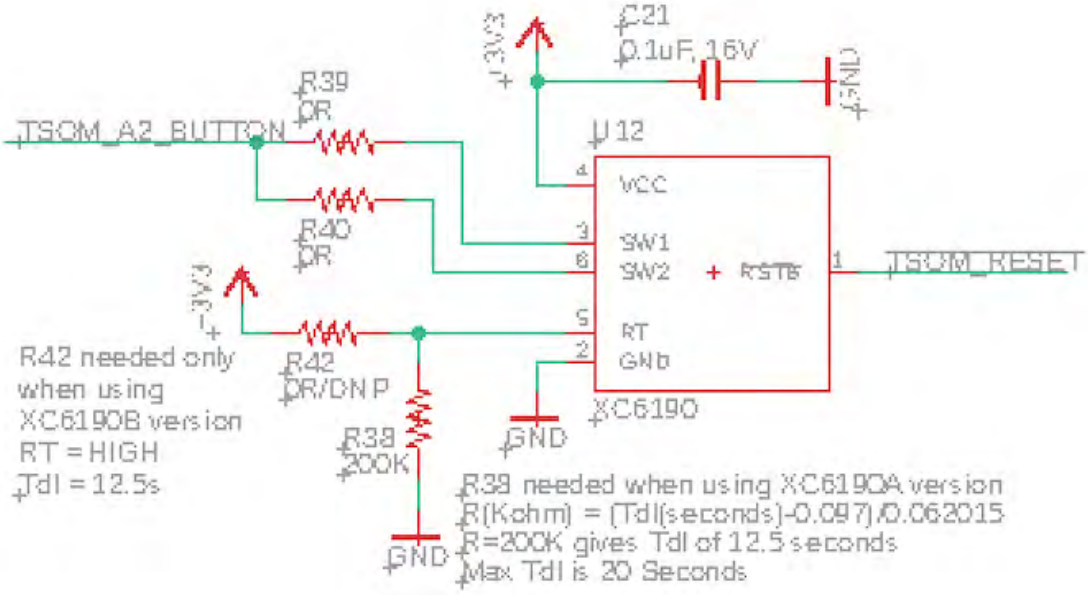

SWD INTERFACE

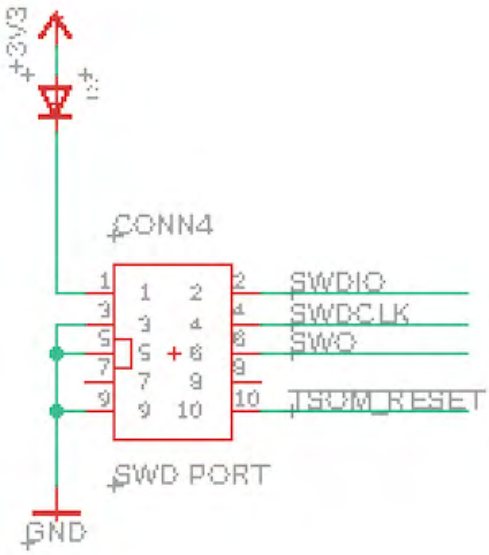

STATUS RGB DRIVER

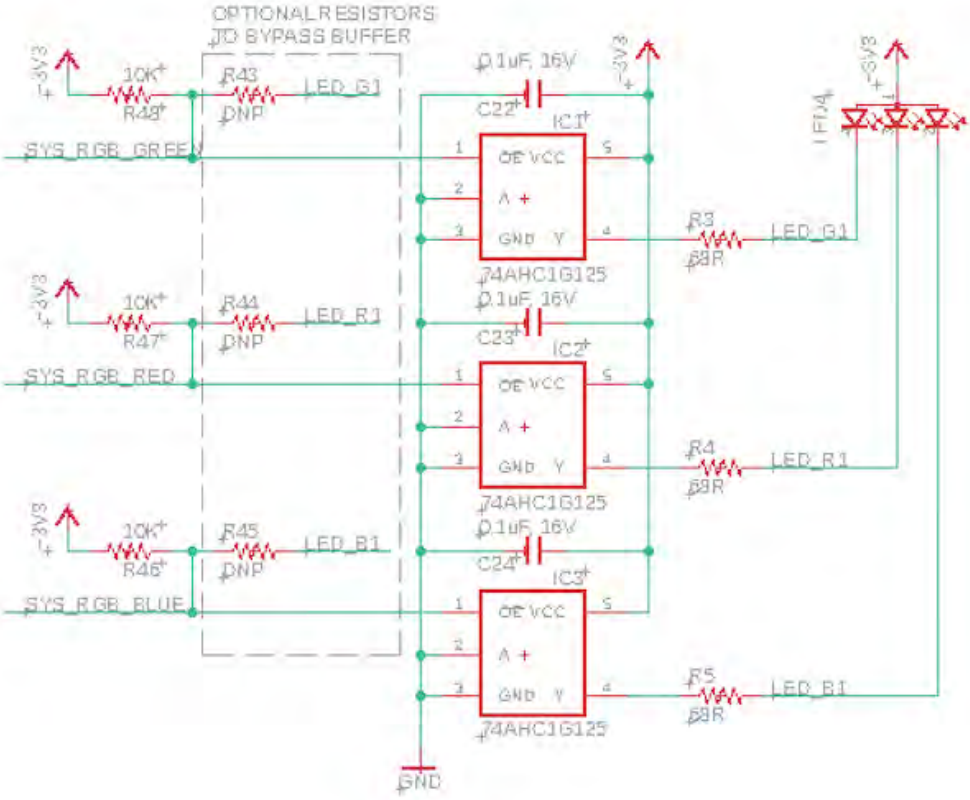

Mechanical specifications

Operating temperature

Parameter	Minimum	Maximum	Units
Operating temperature	-10	60	°C
Battery charging enabled	0	40	°C

Dimensions and weight

Dimensions	Metric	SAE
Width	121 mm	4 3/4"
Height	220 mm	8 5/8"
Depth	69 mm	2 11/16"
Weight	775 g	27.3 oz

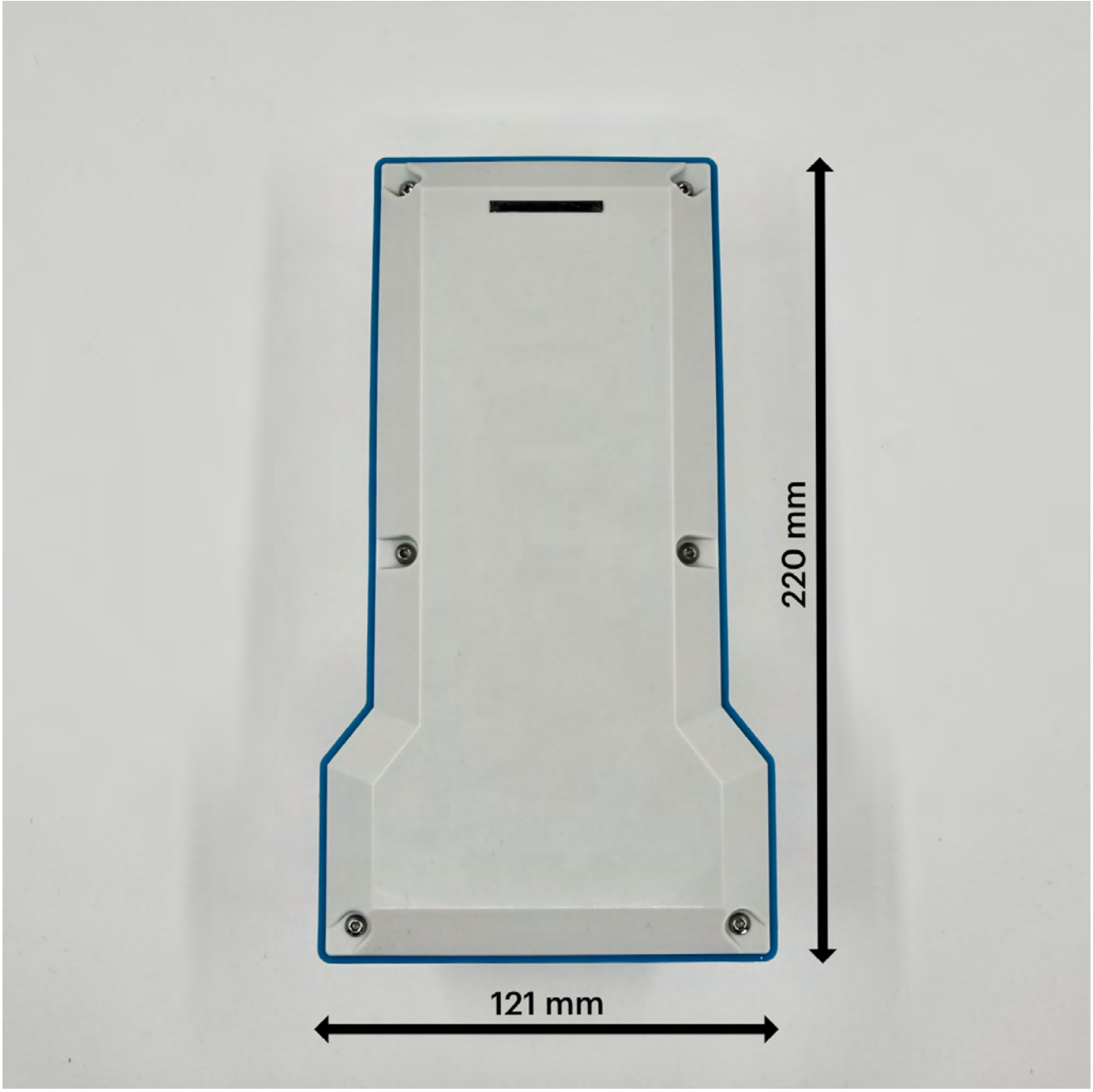
220 mm
121 mm

Dimensions for top cover artwork

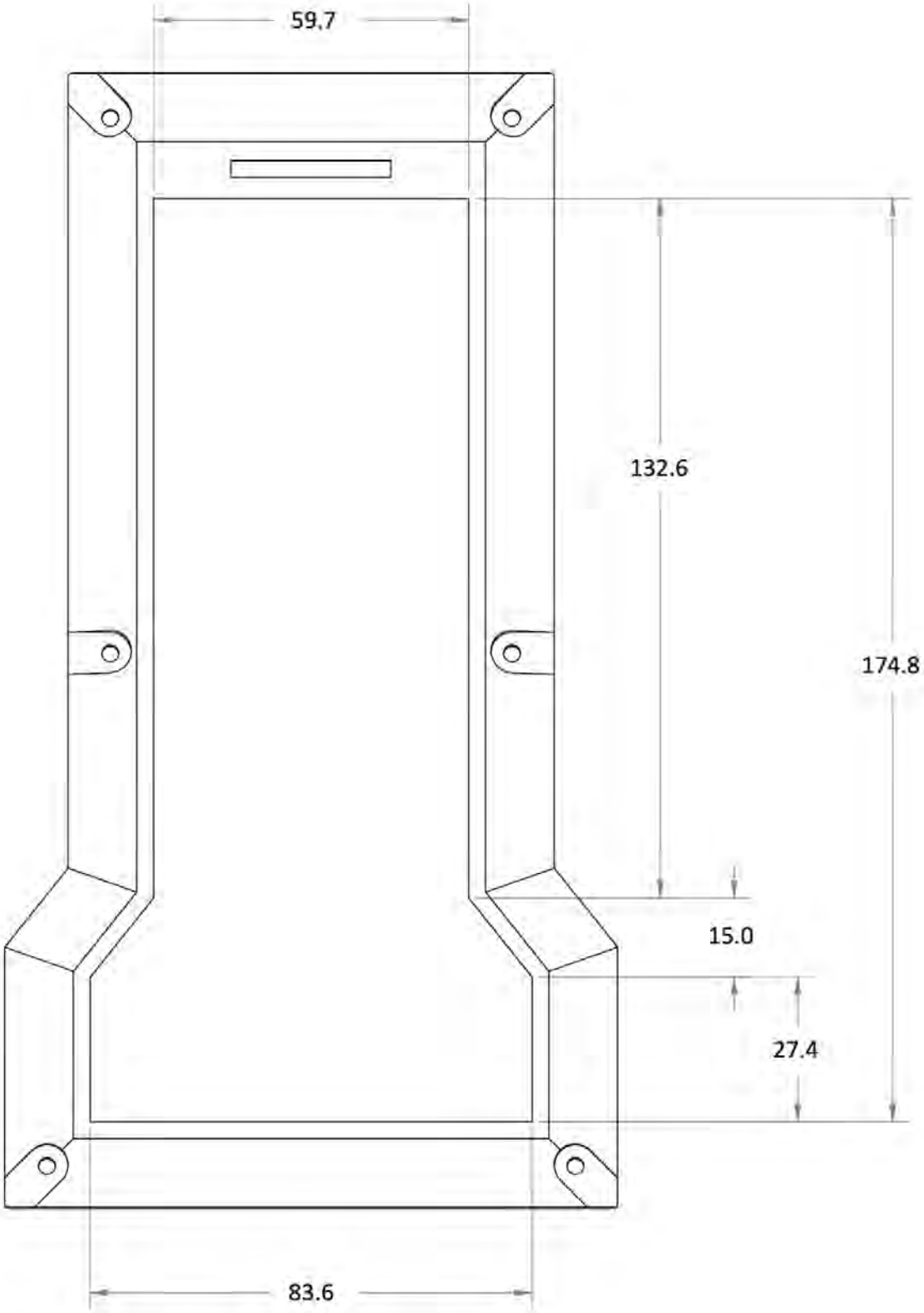

Power consumption

To be provided at a later date.

Battery specifications

- Lithium-ion cylindrical rechargeable battery
- Model: 18650-4P
- Description: Single cell with PCM
- Battery capacity: 12200 mAh
- Batter voltage : 3.7 VDC (nominal)
- Manufacturer: Guangdong Zhaoeng Technology Co., Ltd. (Guangdong, China)
- Datasheet

Product handling

ESD precautions

The Monitor One contains highly sensitive electronic circuitry and is an Electrostatic Sensitive Device (ESD). Handling an module without proper ESD protection may destroy or damage it permanently. Proper ESD handling and packaging procedures must be applied throughout the processing, handling and operation of any application that incorporates the module. ESD precautions should be implemented on the application board where the B series is mounted. Failure to observe these precautions can result in severe damage to the module!

Battery warning

CAUTION

RISK OF EXPLOSION IF BATTERY IS REPLACED BY AN INCORRECT TYPE. DISPOSE OF USED BATTERIES ACCORDING TO THE INSTRUCTIONS.

Disposal

This device must be treated as Waste Electrical & Electronic Equipment (WEEE) when disposed of.

Any WEEE marked waste products must not be mixed with general household waste, but kept separate for the treatment, recovery and recycling of the materials used. For proper treatment, recovery and recycling; please take all WEEE marked waste to your Local Authority Civic waste site, where it will be accepted free of charge. If all consumers dispose of Waste Electrical & Electronic Equipment correctly, they will be helping to save valuable resources and preventing any potential negative effects upon human health and the environment of any hazardous materials that the waste may contain.

Revision history

Date	Author	Comments
2022-10-24	RK	For internal review only
2023-02-14	RK	Updated diagrams
2023-06-07	RK	Numerous updates
2023-06-13	RK	Add Prototype Card, update card names
2023-06-20	RK	Added photos

Date	Author	Comments
2023-07-17	RK	Link to quick start, screw sizes
2023-09-01	RK	Added battery specifications
2023-09-08	RK	Added schematics

Federal Communication Commission Interference Statement

This device complies with Part 15 of the FCC Rules. Operation is subject to the following two conditions: (1) This device may not cause harmful interference, and (2) this device must accept any interference received, including interference that may cause undesired operation.

This equipment has been tested and found to comply with the limits for a Class B digital device, pursuant to Part 15 of the FCC Rules. These limits are designed to provide reasonable protection against harmful interference in a residential installation. This equipment generates, uses and can radiate radio frequency energy and, if not installed and used in accordance with the instructions, may cause harmful interference to radio communications. However, there is no guarantee that interference will not occur in a particular installation. If this equipment does cause harmful interference to radio or television reception, which can be determined by turning the equipment off and on, the user is encouraged to try to correct the interference by one of the following measures:

Reorient or relocate the receiving antenna.
Increase the separation between the equipment and receiver.
Connect the equipment into an outlet on a circuit different from that to which the receiver is connected.
Consult the dealer or an experienced radio/TV technician for help.

FCC Caution:

Any changes or modifications not expressly approved by the party responsible for compliance could void the user's authority to operate this equipment.

This transmitter must not be co-located or operating in conjunction with any other antenna or transmitter.

Radiation Exposure Statement:

This equipment complies with FCC radiation exposure limits set forth for an uncontrolled environment. This equipment should be installed and operated with minimum distance 20cm between the radiator & your body.

Industry Canada statement

1. This device complies with Industry Canada license-exempt RSS standard(s). Operation is subject to the following two conditions:

1) this device may not cause interference, and

2) this device must accept any interference, including interference that may cause undesired operation of the device.

2. Le présent appareil est conforme aux CNR d'Industrie Canada applicables aux appareils radio exempts de licence. L'exploitation est autorisée aux deux conditions suivantes:

1) l'appareil ne doit pas produire de brouillage, et

2) l'utilisateur de l'appareil doit accepter tout brouillage radioélectrique subi, même si le brouillage est susceptible d'en compromettre le fonctionnement.

This Class B digital apparatus complies with Canadian ICES-003.

Cet appareil numérique de la classe B est conforme à la norme NMB-003 du Canada.

This device complies with RSS-310 of Industry Canada. Operation is subject to the condition that this device does not cause harmful interference.

Cet appareil est conforme à la norme RSS-310 d'Industrie Canada. L'opération est soumise à la condition que cet appareil ne provoque aucune interférence nuisible.

This device and its antenna(s) must not be co-located or operating in conjunction with any other antenna or transmitter, except tested built-in radios.

Cet appareil et son antenne ne doivent pas être situés ou fonctionner en conjonction avec une autre antenne ou un autre émetteur, exception faites des radios intégrées qui ont été testées.

The County Code Selection feature is disabled for products marketed in the US/ Canada.

La fonction de sélection de l'indicatif du pays est désactivée pour les produits commercialisés aux États-Unis et au Canada.

Radiation Exposure Statement:

This equipment complies with IC radiation exposure limits set forth for an uncontrolled environment. This equipment should be installed and operated with minimum distance 20cm between the radiator & your body.

Déclaration d'exposition aux radiations:

Cet équipement est conforme aux limites d'exposition aux rayonnements IC établies pour un environnement non contrôlé. Cet équipement doit être installé et utilisé avec un minimum de 20 cm de distance entre la source de rayonnement et votre corps.