EXHIBIT 3 - EUT INTERNAL PHOTOGRAPHS

EUT Housing and Board View 1	
Solder Board-Component View 1	

Solder Board-Component View 2	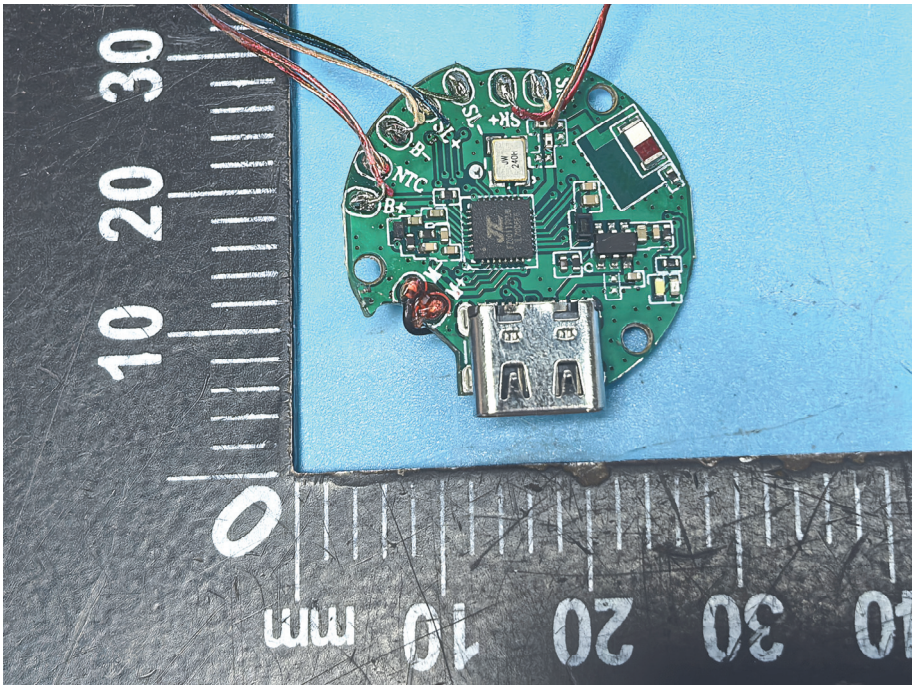
Solder Board-Component View 3	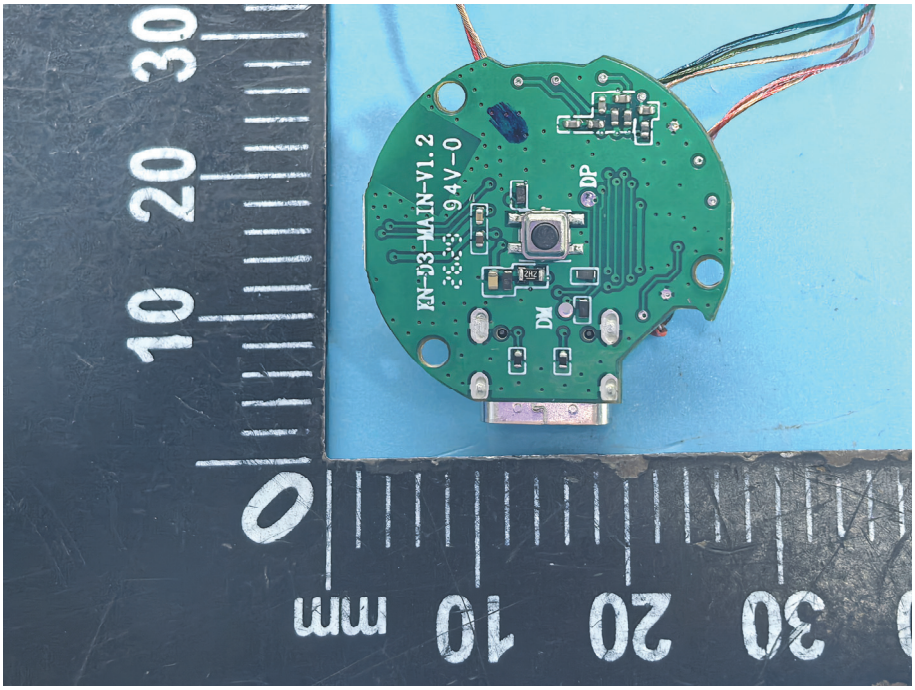

Solder Board-Component View 4	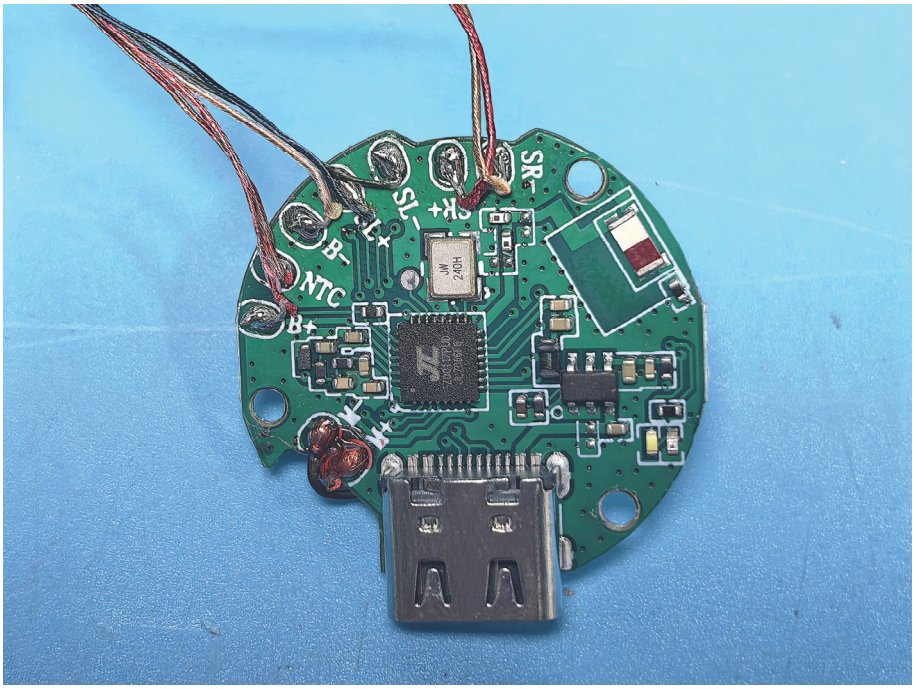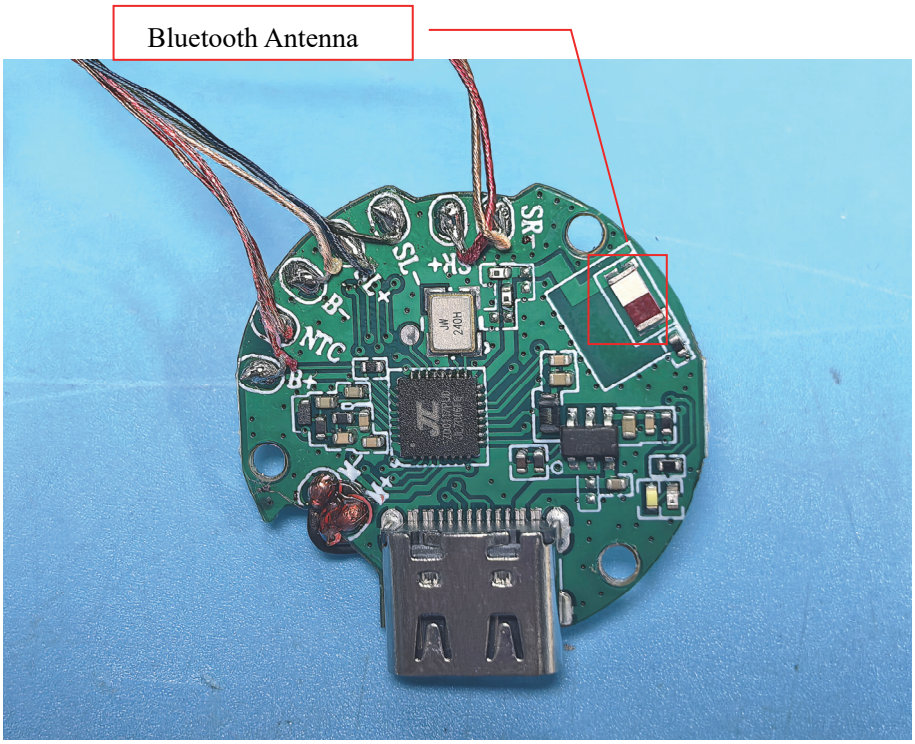
Antenna View