Montblanc e-Tag

User Guide

Content

By purchasing the Montblanc e-Tag you made a good decision. Please read this user guide with care to make the most out of your e-Tag.

A. Getting Started

Box content
Understanding your e-Tag
Open the key ring
Charging the battery
Switching the e-Tag on/off
Installing the e-Tag application
Pairing the e-Tag with your phone
Reconnect to a new phone

B. Montblanc e-Tag functionality

Overview
Connecting your e-Tag
Locate your e-Tag
Motion alarm
Turn alarm on/off
Settings
Last seen function
Managing your e-Tag connection
Safety zones and further settings

C. Safety instructions

D. Certification statement

E. End user license agreement

F. Privacy policy

G. Terms of use

H. Technical information

I. Disclaimer

A. Getting Started

The e-Tag can be located with your smartphone, alarm you when your belongings are moved, send notifications if it gets out of range and show you the area it was last located. Follow this getting started chapter or the quick start guide enclosed to the e-Tag before setting up your e-Tag and connecting it to your phone.

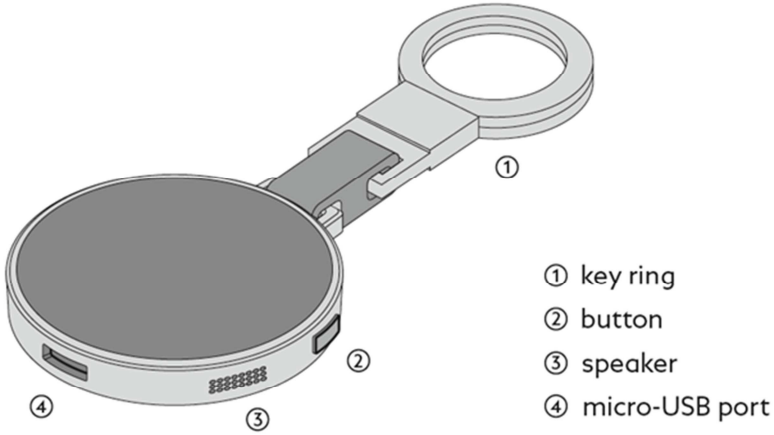

Box content

The e-Tag comes with the following items:

1 x e-Tag
1 x micro-USB cable
1 x Quick start guide
1 x Montblanc service guide

Understanding your e-Tag

The e-Tag consists of a ring to attach it to your item and an electronic part that connects to your phone.

Open the key ring

To open the key ring pull down the flat metal plate (1) and turn the ring to the left or right (2) until it opens up (3). Now attach the e-Tag to one of your belongings and close the key ring again by turning it back.

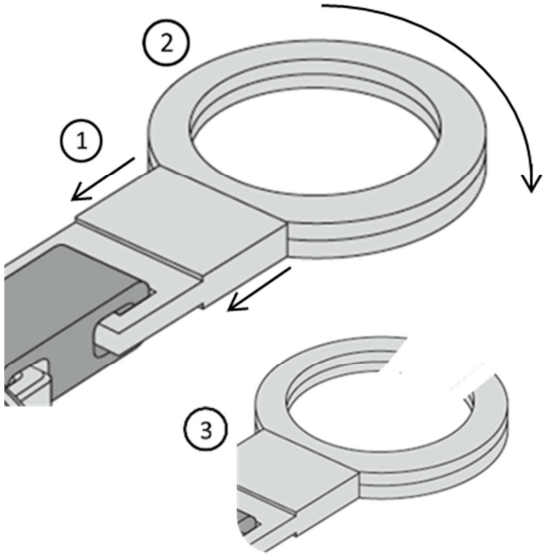

Charging the battery

Use the enclosed Montblanc micro-USB cable to charge your e-Tag. Plug the micro-USB cable into the micro-USB port. Plug the other end of the cable into the USB port of a computer or a suitable USB charger.

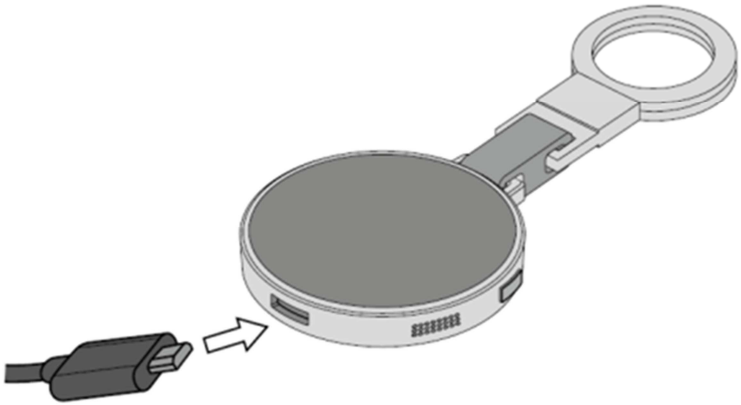

After 4 hours of charging remove the USB cable first from the computing device or USB charger and then disconnect the micro-USB from the e-Tag. Please do not leave the e-Tag on prolonged charging, as it may harm the battery performance. The device runs with a rechargeable lithium-ion battery that provides power for a maximum of two weeks. The battery life may vary depending on your personal usage pattern and environmental conditions. You can check the battery status in the settings of the smartphone application. Do not leave the e-Tag discharged as thiy may decrease the battery life time or damage the battery.

Switching the e-Tag on/off

To turn the device on/off press and hold the button on the e-Tag for three seconds. The e-Tag will make an ascending sound when turned on and a descending sound when turned off.

Installing the e-Tag application

The Montblanc e-Tag is compatible with Apple iPhone 4S and above running iOS8. Other mobile devices are not supported by the e-Tag.

For installing the smartphone application make sure that you have an active Wi-Fi or mobile network connection to access the App store.

By clicking on the app store logo below you will be forwarded to the app download.

Download on the App Store

You can also download the app by following these instructions:

1. Access the store by tapping on the “App Store” icon
2. Tap the “Search” icon in the navigation bar
3. Click into the search field and type “Montblanc e –Tag”
4. Select the first search result from the list and tap on the “Load” button

Pairing the e-Tag with your phone

The e-Tag is paired to the smartphone using Bluetooth® Low Energy. Through pairing, the e-Tag is able to continuously communicate with your phone. The pairing process has to be done only once.

Before pairing, please ensure the following:

1. Bluetooth is on
2. e-Tag is on
3. e-Tag is within proximity
4. The app is up to date
5. Your phone has an active internet connection

Turn Bluetooth® on

1. Swipe from bottom to top
2. Tap on the Bluetooth icon in the overlay

Connect the e-Tag to your iPhone

Turn the e-Tag on by pressing and holding the button on the device for three seconds. The e-Tag will make an ascending sound and connect to your smartphone.

Reconnect to a new phone

Once the e-Tag is paired it cannot be used with another phone unless you unpaired it. To reconnect the e-Tag to another phone follow these three steps.

1. **Remove the e-Tag from your app**

2. **Unpair the e-Tag from your phone**

The e-Tag can be paired to one phone only at the same time. If you already paired your e-Tag to a phone, you must unpair it before pairing it with another phone.

Unpair the e-Tag from your iPhone

Enter Settings and tap on Bluetooth.

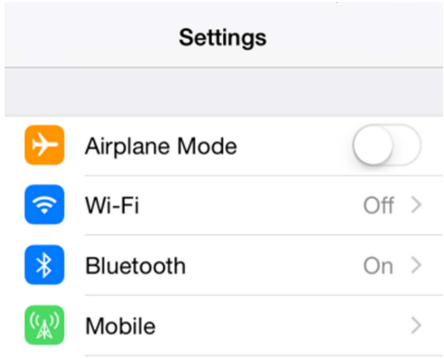

Under “My Devices” tap on the information icon next to “MONTBLANC E-TAG”. Then tap on “Forget This Device”. Turn your e-Tag off. Now press and hold the button on the device for about 10 seconds until you hear three beeps. The e-Tag is now ready to pair again. The e-Tag is now unpaired and ready to pair again with another phone.

B. Montblanc e-Tag functionality

The application manages the connection between your Phone and the e-Tag. To setup the smartphone application follow the “Getting Started”-chapter at the beginning of the manual.

Overview

Once you connected the e-Tag to your smartphone and launched the application, you will be prompted to the connection screen. After the connection process is completed you will be prompted to the main screen. Please keep the application running for the best experience.

Connecting your e-Tag

The application will ask you to switch the e-Tag on by pressing its button for three seconds. The application will guide you through the pairing and connection process.

After the connection between your smartphone and e-Tag is set up you can either choose between a preselected item you want to attach your e-Tag to (1) or give it a name (2).

1. Locate the e-Tag
2. Activate motion alarm
3. Turn alarm on/off
4. Settings

Home screen

From the home screen the e-Tag functionalities can be accessed.

1. Locate your e-Tag

Use the “Locate” function to find your e-Tag within your proximity. Tap on the locate button on the main screen and the e-Tag will play a melody to reveal its position.

Once you have found your device you can turn the alarm off by tapping on the “Done” button in the app or by shortly pressing (< 1 second) the button of the e-Tag device.

2. Motion alarm

The motion alarm will react to any movement of the e-Tag and send a notification to your smartphone. To deactivate the alarm please tap on the “Motion” symbol on the main screen. For a longer battery lifetime turn the motion alarm off when you don't need it.

3. Turn alarm on/off

You can mute all alarms on the e-Tag. To turn the alarm on/off tap on the “Mute” symbol on the main screen. If the symbol is black, the alarm is turned off. It is recommanded to only turn the alarm off in safe areas. There is no protection to your items if the alarm is turned off.

4. Settings

You can access the settings menu from the main screen by swiping from the left to the right or tapping on the three bars. The settings enable you to add safe zones (1) and display the status of your e-Tag (2). You can find additional information and support for your e-Tag (3).

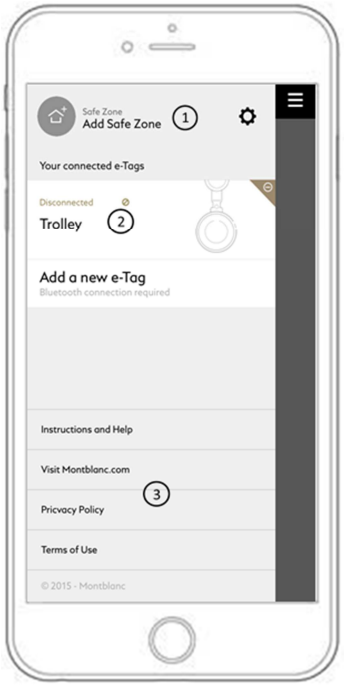

Last location

When your e-Tag gets out of range (loss of Bluetooth connection) you can tap on the “last location” button to receive the last location where the e-Tag was connected to your phone.

The last location of your e-Tag will be shown on the map. Tap on the “Get directions” button and the route to the last location of the device will be calculated.

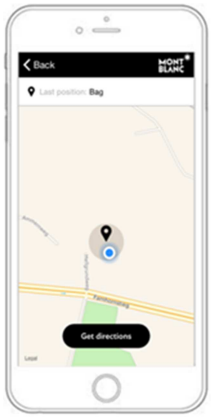

Managing your e-Tag connection

You can manage your e-Tags in the settings menu by tapping on the three bars. In the “Your connected e-Tags” you will find information about all connected e-Tags.

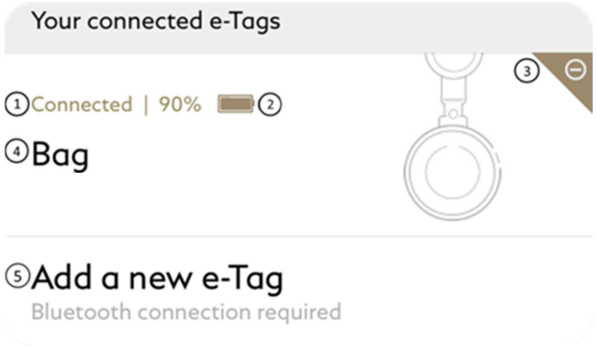

1. Connection status: Shows “Connected” when the device is connected to your e-Tag application or “Disconnected” when it is not connected.

2. Battery status: Shows the battery life of the e-Tag in percent.

3. Change connection status: Tap on the “-“ sign next to the e-Tag to remove the e-Tag from your app (see chapter on how to unpair the e-Tag from your phone).

4. Name: Displays the name of your e-Tag.

5. Add a new e-Tag: Add an additional e-Tag to your iPhone. The number of e-Tags that can be connected to the application is limited to two.

Safe zones

You can add safe zones to avoid false alarms in secure areas. A safe zone can be any safe location like your home or your office. To add a safe zone tap the house symbol in the settings (1) and enter the address of your safe zone. Please make sure that GPS is turned on during this process.

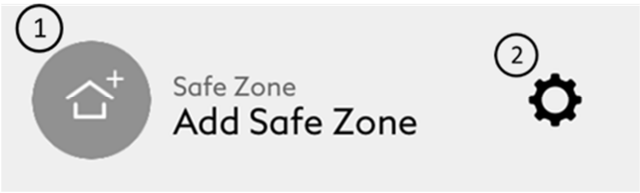

Settings

To adjust settings please tap on the gear-wheel next to the safe zone (2). A menu will open up and you can decide whether to turn on or off the following options:

Notifications

If turned off, the app will stop pushing notifications to the iOS home screen when an alarm occurs or the e-Tag moves again into your range.

Sound

If turned off, the phone will not play sounds on alarms.

Vibration

If turned off, the phone will not vibrate on alarms.

Bluetooth

Disconnects all e-tags and disables Bluetooth in the app.

Alert in silent mode

If turned on, the app plays sounds on alarms even when the phone is muted.

Battery saving mode

If turned on, battery is saved at the expense of a less sensitive alarm detection.

C. Safety instructions

Please read the following warning and safety information carefully to prevent incidents. Any configuration or use other than what is in line with the suggested and intended use is not covered or guaranteed.

- Keep the device away from any ear, as hearing damage may occur.
- Montblanc does not guarantee against loss of possessions or people.
- Using the e-Tag the correct and intended way, might prevent loss of possessions.
- Do not disassemble, repair, modify, open, drop, puncture, crush, shred or try otherwise to damage the device. Refrain from putting high pressure on it or place it near or in a heat source. The device should be used in temperatures between 32–95°F (0–35°C).
- If the e-Tag begins to swell or expand, emits strong odor, or becomes hot to the touch, discontinue usage and contact a Montblanc Boutique or an authorised Montblanc Retailer.
- The e-Tag comes with a rechargeable lithium ion battery which is flammable. Keep away from open flame. If the battery inside the e-Tag leaks, discontinue use, and do not allow the e-Tag to contact your skin or eyes. In event of accidental contact wash the affected area with large amounts of water and seek medical assistance immediately.
- Do not leave the e-Tag on prolonged charge when not in use. Damages resulting from the usage of an improper charger are not covered by the warranty.
- In case of a leaking battery, refrain from handling or touching it.
- Avoid any contact, in particular with your eyes or skin. Contact a Montblanc Boutique or an authorised Montblanc Retailer.
- Please refrain from using the device while operating a vehicle as it may distract you.
- Only use the USB cable provided for charging the device and take care to use a stable power source for charging.
- Keep your e-Tag dry, and do not use it with wet hands. Moisture in or on the e-Tag may lead to electric shock.
- The device is not a toy. Keep the device and accessories away from small children.
- Do not service the device yourself. For service and maintenance contact your Montblanc Boutique or an authorised Montblanc Retailer.

- Do not store your e-Tag in elevated temperatures or in high humidity.

D. Certification statements

Declaration of conformity

Montblanc declares that this product is in compliance with the essential requirements of European Directive 1999/5/EC on Radio and Telecommunications Terminal Equipment (R&TTE). A copy of the Declaration of Conformity for this product may be obtained by clicking on the Compliance Documentation on www.montblanc.com/e-tag

FCC statement

This device complies with Part 15 of the FCC Rules. Operation is subject to the following two conditions:

(1) this device may not cause harmful interference, and (2) this device must accept any interference received, including interference that may cause undesired operation.

Changes or modifications not expressly approved by the party responsible for compliance could void the user's authority to operate the equipment.

IC statement

This device complies with Industry Canada licence-exempt RSS standard(s). Operation is subject to the following two conditions:

(1) this device may not cause interference, and

(2) this device must accept any interference, including interference that may cause undesired operation of the device.

Le présent appareil est conforme aux CNR d'Industrie Canada applicables aux appareils radio exempts de licence. L'exploitation est autorisée aux deux conditionssuivantes:

(1) l'appareil ne doit pas produire de brouillage, et

(2) l'utilisateur de l'appareil doit accepter tout brouillage

radioélectrique subi, même si le brouillage est susceptible d'en compromettre le fonctionnement.

NCC statement

Warning Statement:

“ 本產品符合低功率電波輻射性電機管理辦法 第十二條、第十四條等條文規定:

1. 經型式認證合格之低功率射頻電機，非經許可，公司、商號或使用者均不得擅自變更頻率、加大功率或變更原設計之特性及功能。

2. 低功率射頻電機之使用不得影響飛航安全及干擾合法通信；經發現有干擾現象時，應立即停用，並改善至無干擾時方得繼續使用。

前項合法通信，指依電信法規定作業之無線電通信。低功率射頻電機須忍受合法通信或工業、科學及醫療用電波輻射性電機設備之干擾。”

E. End user license agreement

About Montblanc and this End User Licence Agreement

Montblanc-Simplo GmbH has its registered offices at Hellgrundweg 100, D-22525 Hamburg. In this Device EULA, we use the term Montblanc (and "**we**", "**us**" and "**our**") to refer to the head office of Montblanc at the registered address above and to its affiliates.

This End User Licence Agreement ("**Device EULA**") is a legal agreement between you and Montblanc-Simplo GmbH for your use of the Montblanc e-Tag or other wearable technology (together the “**Device**”), including all associated media and online or electronic documentation. The Terms of Use also contain an end user licence agreement in respect of your use of the mobile application and forms part of the user documentation provided to you when you download the mobile application for the Device. Data is transferred from the Device to the mobile application and is encrypted over Bluetooth.

Please read the terms of this Device EULA carefully before using the Device. By using the Device, you signify your assent and agreement to this Device EULA. If you do not agree to this Device EULA, then you are not authorised to continue use of the Device.

Changes to this Device EULA

We may make changes to this Device EULA from time to time. If you do not agree with the Device EULA at any time, you should cease using the Device. Your continued use of the Device constitutes you continued agreement to the current Device EULA.

Intellectual property and end user license

You acknowledge that all intellectual property rights in the Device anywhere in the world belong to us or our licensors, that rights in the firmware that forms part of the Device are licensed (not sold) to you, and that you have no rights in, or to, the Device other than the right to use it in accordance with the terms of this Device EULA.

The design, trademarks, service marks, logos and branding displayed in the Device and all content and information within it, belongs to Montblanc and its licensors, and are protected by intellectual property legislation such as copyright, designs and trademark legislation and under international treaty provisions and national laws worldwide and you must not use it except as strictly permitted by this Device EULA.

In consideration of you agreeing to abide by this Device EULA, Montblanc grants you a limited, non-transferable, non-exclusive licence use of the Device and its firmware for your own non-commercial, educational, private or domestic use only. We reserve all other rights not expressly granted to you under this Device EULA.

You may not:

(a) rent, lease, sell, sublicense, redistribute, adapt, vary or modify the Device;

(b) copy, reverse engineer, decompile, attempt (in whole or in part) to obtain the source code of, modify or create derivative works of the Device, or any updates except to the extent that you cannot be prohibited from so doing under applicable law; or

(c) adapt or circumvent or disable any technological protection measures contained in or used to protect the Device.

You must not transmit any data, send or upload any material that contains viruses, Trojan horses, worms, time-bombs, keystroke loggers, spyware, adware or any other harmful programs or similar computer code designed to adversely affect the operation of any computer software.

Disclaimers and limitation of liability

This section applies to the Device only and not other Montblanc products. Nothing in this section is intended to limit any of your rights pursuant to the Montblanc International Guarantee provided to you with the Device.

Montblanc hopes to provide helpful and accurate information on the Device, but makes no endorsement, representation or warranty of any kind about any information, services or recommendations made available through the Device. All information, services or recommendations is provided for informational purposes only. Montblanc is not responsible for the accuracy, completeness, reliability, effectiveness, or correct use of information displayed or accessed through the Device. If you rely on any information provided by Montblanc or available through the Device, then this is at your own risk. In addition, Montblanc does not warrant or represent that the use of the Device will not infringe rights of third parties.

Access and information transmitted in connection with the Device will pass over public telecommunications networks. We make no representation or warranty in connection with, and disclaim any liability for, the network or service used to access and use the Device.

Montblanc does not warrant that the functional and/or technical aspects of the Device will be error-free or that the Device is free of

viruses or other harmful components. If use of the Device results in the need for servicing or replacing property, material, equipment, data or other element, Montblanc is not responsible for those costs. Without limiting the foregoing, everything on the Device is provided to you "AS IS" AND "AS AVAILABLE" AND, TO THE FULLEST EXTENT PERMITTED BY APPLICABLE LAW, WITHOUT WARRANTY OF ANY KIND, EITHER EXPRESSED OR IMPLIED, INCLUDING, BUT NOT LIMITED TO, THE IMPLIED WARRANTIES OF MERCHANTABILITY, SATISFACTORY QUALITY, FITNESS FOR A PARTICULAR PURPOSE, REASONABLE CARE AND SKILL, OR NON-INFRINGEMENT. Montblanc and its suppliers or licensors make no warranties about the (i) software, text, downloads, graphics, and links that form part of the Device, or about results to be obtained from using the Device; and (ii) the ability of the Device to integrate with any third party software (including compatibility issues arising out of upgrades released for mobile operating systems).

Our maximum aggregate liability under or in connection with this Device EULA (including your use of the Device) and the Terms of Use whether in contract, tort (including negligence) or otherwise, shall in all circumstances be limited to the amount that you paid for the Device, provided that nothing in this Device EULA shall limit or exclude our liability for (i) death or personal injury resulting from our negligence, (ii) fraud or fraudulent misrepresentation, and (iii) any other liability that cannot be excluded or limited by law.

To the fullest extent permitted by applicable law, Montblanc shall not be liable for any indirect, incidental, special or consequential damages of any kind arising out of or in connection with the use of the Device (including reliance on information made available as part of your use of the Device) or any liability relating to any loss of use, interruption of business, lost profits or lost data, regardless of the form of action, whether in contract, tort (including negligence) or otherwise, even if Montblanc has been advised of the possibility of such damages.

Please note that in some jurisdictions consumer protection laws may not allow certain exclusions or limitation of warranties or liabilities, and consequently some of the above exclusions and limitations may not apply.

Termination and suspension

You agree that Montblanc may terminate or suspend your licence to use the Device at any time, with or without notice to you. We may terminate your licence if Montblanc reasonably believes that you have violated or acted inconsistently with the letter or spirit of the Device EULA, or violated the rights of Montblanc, its affiliated companies or any third party. You agree that Montblanc may modify

or discontinue providing the Device, with or without notice to you. Upon termination of your licence you must stop using the Device.

Changes to the Device

You agree that Montblanc may change or update the Device and its features at any time. Depending on the update, you may not be able to use the Device until you have downloaded the latest version of it and accepted any new terms.

General provisions

If any provision, or part of a provision, of this Device EULA is found to be illegal, invalid or unenforceable, that provision or part-provision shall be deemed not to form part of this Device EULA, and the legality, validity or enforceability of the remainder of the provisions of this Device EULA shall not be affected, unless otherwise required by operation of applicable law.

This Device EULA, the Terms of Use and the Privacy Policy constitute the entire agreement between you and us in relation to the use of the Device, and replace and extinguish all prior agreements, draft agreements, arrangements, undertakings, or collateral contracts of any nature made by the parties, whether oral or written, in relation to such subject matter.

The waiver by Montblanc of a breach of any provision of these Terms of Use will not operate to be interpreted as a waiver of any other or subsequent breach.

Applicable law and jurisdiction

This Device EULA shall be governed by and construed in accordance with the laws of Switzerland, without reference to conflict of laws provisions. Any dispute, controversy or claim arising out of or in relation to this Device EULA, including the validity, invalidity, breach or termination thereof, shall be adjudicated or arbitrated in accordance with this Device EULA. Where the laws of Switzerland are different to the mandatory consumer laws in your own country, we will afford you with similar

F. Privacy policy

About Montblanc and this Privacy Policy

Montblanc-Simplo GmbH has its registered offices at Hellgrundweg 100, D-22525 Hamburg and acts as the data controller in connection with all personal information that is processed under this Privacy Policy. In this Privacy Policy, we use the term Montblanc (and "**we**", "**us**" and "**our**") to refer to the head office of Montblanc at the registered address above and its affiliates.

Please take a moment to read the following policy which explains how the Montblanc e-Tag or other wearable technology and the associated mobile applications (together the "**Device**") collects, uses, discloses and transfers information provided to it through use.

You can find out more about terms governing the use of the Device in the Terms of Use (www.montblanc.com/e-tag).

Protecting your information

We want you to feel confident about using the Device, and we are committed to protecting the personal information that the Device collects. Accordingly, such information will be stored locally on the Device and can only be accessed on your device.

Contact us

If you have any questions or comments about this Privacy Policy, or privacy matters generally, please contact us at the address provided below. You can also use this address if you wish to request access to the personal data we hold about you.

service@montblanc.com

Montblanc-Simplo GmbH
Hellgrundweg 100
D-22525 Hamburg

Telephone: +49 40 84 001 0
Telefax: +49 40 84 001 300

G. Terms of use

About Montblanc and these Terms of Use

Montblanc-Simplo GmbH has its registered offices at Hellgrundweg 100, D-22525 Hamburg. In these Terms of Use, we use the term Montblanc (and "**we**", "**us**" and "**our**") to refer to the head office of Montblanc at the registered address above and its affiliates.

These Terms of Use represent a legal agreement between you and Montblanc-Simplo GmbH governing your use of the Montblanc e-Tag or other wearable technology and the associated mobile application (together the "**Device**"), including all associated media and online or electronic documentation. The Device is operated by or on behalf of Montblanc-Simplo GmbH.

These Terms of Use also contain an end user licence agreement in respect of your use of the mobile application for the Device. The Device EULA governs the use of the device itself and forms part of the user documentation provided to you with your device.

Please read these Terms of Use carefully before using the Device. Your use of the Device is governed by and subject to the terms of these Terms of Use. By downloading the mobile application and using the device, you signify your assent and agreement to these Terms of Use. If you do not agree to these Terms of Use, then you are not authorised to continue use of the Device.

Updates to these Terms of Use

We may make changes from time to time to these Terms of Use so please check back regularly to keep informed of updates. The latest version of these Terms of Use will always be available on www.montblanc.com/e-tag. Any new version of these Terms of Use shall take effect and will govern the use of the Device and your relationship with us immediately upon the date of posting. By continuing to use the Device, you agree to be bound by the terms of these updates and amendments.

About our hosting services

Hosting Services for our website is provided by Richemont International SA at 1752 Villars-sur-Glâne which is located in Switzerland. We do not host data as part of your use of the Device.

Mobile applications may be hosted by us or by other companies and you should refer to the relevant conditions of such other company.

Our privacy policy

Our information collection practices are governed by the terms of our Privacy Policy (www.montblanc.com/e-tag).

Your use of the Device

Full use of the Device requires compatible devices.

You agree to use the Device only for lawful purposes and only in compliance with (i) all applicable local, national and international laws and regulations connected with the Device, (ii) these Terms of Use and the Device EULA, and (iii) any reasonable instructions and guidelines that we may issue within the Device or otherwise in relation to the Device from time to time.

Intellectual property and end user licence for the mobile application

You acknowledge that all intellectual property rights in the mobile application anywhere in the world belong to us or our licensors, that rights in the software that forms part of the mobile application are licensed (not sold) to you, and that you have no rights in, or to, the mobile application other than the right to use each of them in accordance with these Terms of Use.

In consideration of you agreeing to abide by these Terms of Use, Montblanc grants you a limited, non-transferable, non-exclusive licence to install and use the mobile application on any supported mobile device for your own non-commercial, educational, private or domestic use only. Your download of the mobile application is subject to the terms of download imposed by the operator of the app store from which you download the mobile application. We reserve all other rights not expressly granted to you under these Terms of Use.

You may not:

- use the mobile application on any device that you do not own or control;
- rent, lease, sell, sublicense, redistribute, adapt, vary or modify the mobile application;
- copy, reverse engineer, decompile, attempt (in whole or in part) to obtain the source code of, modify or create derivative works of the mobile application, or any updates except to the extent that you cannot be prohibited from so doing under applicable law; or
- adapt or circumvent or disable any technological protection measures contained in or used to protect the mobile application.

You must not transmit any data, send or upload any material that contains viruses, Trojan horses, worms, time-bombs, keystroke loggers, spyware, adware or any other harmful programs or similar computer code designed to adversely affect the operation of any computer software.

Use of materials on the Device

You may download one computer copy or print one copy of the material made available to you as part of your use of the Device, or download the application on to your mobile device, for your own non-commercial, educational, private or domestic use only, provided that proprietary notices, in particular intellectual property notices such as copyright©, trademark™, are preserved intact and are not modified, deleted or changed. Unless otherwise stated, you should assume that everything that you see or read on the Device (such as images, photographs, including any person represented in the photographs, illustrations, icons, texts, video clips, music, written and other materials) ("**Montblanc Material**") are protected by legislation such as copyright, designs and trademark legislation and under international treaty provisions and national laws worldwide.

You are not authorised to sell, reproduce, distribute, communicate, modify, display, publicly perform, report or otherwise prepare derivative or second hand works based on or use any Montblanc Material in any way for any public or commercial purposes. Furthermore, Montblanc Material may not be displayed or communicated on any other platform, in a networked computer environment or on any other digital platform for any purpose whatsoever. In the event of breach of any of these Terms of Use, your permission to use the Montblanc Material will automatically terminate and any copies made of Montblanc Material must be immediately destroyed. Any unauthorised use of the Montblanc Material may infringe copyright laws, trademark laws, the laws of privacy and publicity, and communications regulations and statutes.

Disclaimers and limitation of liability

This section applies to the Device only and not other Montblanc products. Nothing in this section is intended to limit any of your rights pursuant to the Montblanc International Guarantee provided to you with the device.

Montblanc hopes to provide helpful and accurate information on the Device, but makes no endorsement, representation or warranty of any kind about any information, services or recommendations made available through the Device. All information, services or recommendations is provided for informational purposes only.

Montblanc is not responsible for the accuracy, completeness, reliability, effectiveness, or correct use of information displayed or accessed through the Device. If you rely on any information provided by Montblanc or available through the Device, then this is at your own risk. In addition, Montblanc does not warrant or represent that the use of the Device and/or Montblanc Material will not infringe rights of third parties.

Your use of the Device is at your own risk. We are not responsible for any health problems that may result from training programs or products you learn about through the Device. If you engage in any exercise program you receive or learn about through the Device you agree that you do so at your own risk and are voluntarily participating in these activities. No content and information available or provided by the Device is intended to replace the relationship between you and your doctor or other medical provider.

Access and information transmitted in connection with the Device will pass over public telecommunications networks. We make no representation or warranty in connection with, and disclaim any liability for, the network or service used to access and use the Device.

Montblanc does not warrant that the functional and/or technical aspects of the Device will be error-free or that the Device, Montblanc Material or the servers that make them available are free of viruses or other harmful components. If use of the Device or Montblanc Material results in the need for servicing or replacing property, material, equipment, data or other element, Montblanc is not responsible for those costs. Without limiting the foregoing, everything on the Device is provided to you "AS IS" AND "AS AVAILABLE" AND, TO THE FULLEST EXTENT PERMITTED BY APPLICABLE LAW, WITHOUT WARRANTY OF ANY KIND, EITHER EXPRESSED OR IMPLIED, INCLUDING, BUT NOT LIMITED TO, THE IMPLIED WARRANTIES OF MERCHANTABILITY, SATISFACTORY QUALITY, FITNESS FOR A PARTICULAR PURPOSE, REASONABLE CARE AND SKILL, OR NON-INFRINGEMENT. Montblanc and its suppliers or licensors make no warranties about the (i) Montblanc Materials, software, text, downloads, graphics, and links of the Device, or about results to be obtained from using the Device; and (ii) the ability of the Device to integrate with any third party software (including compatibility issues arising out of upgrades released for mobile operating systems)..

Our maximum aggregate liability under or in connection with these Terms of Use (including your use of the mobile application) and the Device EULA whether in contract, tort (including negligence) or otherwise, shall in all circumstances be limited to the amount that you paid for the device, provided that nothing in these Terms of Use shall limit or exclude our liability for (i) death or personal injury re-

sulting from our negligence, (ii) fraud or fraudulent misrepresentation, and (iii) any other liability that cannot be excluded or limited by law.

To the fullest extent permitted by applicable law, Montblanc shall not be liable for any indirect, incidental, special or consequential damages of any kind arising out of or in connection with the use of the Device (including reliance on information made available as part of your use of the Device) or any liability relating to any loss of use, interruption of business, lost profits or lost data, regardless of the form of action, whether in contract, tort (including negligence) or otherwise, even if Montblanc has been advised of the possibility of such damages.

Please note that in some jurisdictions consumer protection laws may not allow certain exclusions or limitation of warranties or liabilities, and consequently some of the above exclusions and limitations may not apply.

Trademark notice

In general, all trademarks, logos and service marks that appear on the Device are registered, unregistered or otherwise protected Montblanc trademarks or are licensed for use by Montblanc by third parties. Other trademarks are proprietary marks and are registered to their respective owners. Nothing contained on the Device should be construed as granting, by implication or otherwise, any licence or right to use any trademark without Montblanc's prior written permission or that of such third party who owns the trademark. Misuse of any trademark displayed on the Device, or any other content on the Device, except as provided herein, is strictly prohibited.

Copyright notice

All content (including Montblanc Materials) on the Device are either Copyright © Montblanc or are licensed for use by Montblanc. All rights are reserved. Please refer to the section above on Use of Materials on the Device.

Links & linking

The Device may contain links to other platforms operated by third parties not affiliated to Montblanc. The inclusion of any link to such third party sites does not imply endorsement by Montblanc of those sites. Montblanc has not reviewed all of the content contained in the linked sites and is not responsible for the content or accuracy of any off-site pages or any other sites linked to any of the Device. If you choose to click through any link to off-site pages or third party sites then this is at your own risk.

Termination and suspension

You agree that Montblanc may terminate or suspend your access to and use of the Device if Montblanc reasonably believes that you have violated or acted inconsistently with the letter or spirit of these Terms of Use, or violated the rights of Montblanc, its affiliated companies or any third party, with or without notice to you. You agree that Montblanc may modify or discontinue providing any use of the Device, with or without notice to you. You agree that Montblanc will not be liable to you or any third party as a result of such modification or discontinuation. The provisions entitled "Disclaimers and Limitation of liability" and "General provisions" will survive termination of these Terms of Use.

General provisions

If any provision, or part of a provision, of these Terms of Use is found to be illegal, invalid or unenforceable, that provision or part-provision shall be deemed not to form part of these Terms of Use, and the legality, validity or enforceability of the remainder of the provisions of these Terms of Use shall not be affected, unless otherwise required by operation of applicable law.

These Terms of Use, the Privacy Policy and the End User Agreement for the device constitute the entire agreement between you and us in relation to the use of the Device, and replace and extinguish all prior agreements, draft agreements, arrangements, undertakings, or collateral contracts of any nature made by the parties, whether oral or written, in relation to such subject matter.

The waiver by Montblanc of a breach of any provision of these Terms of Use will not operate to be interpreted as a waiver of any other or subsequent breach.

Applicable law and jurisdiction

These Terms of Use shall be governed by and construed in accordance with the laws of Switzerland, without reference to conflict of laws provisions. Any dispute, controversy or claim arising out of or in relation to the Terms of Use, including the validity, invalidity, breach or termination thereof, shall be adjudicated or arbitrated in accordance with said Terms of Use. Where the laws of Switzerland are different to the mandatory consumer laws in your own country, we will afford you with similar protection.

Contact us

If you have any questions or comments about these Terms of Use, or matters generally, please contact us at the address provided be-

low. You can also use this address if you wish to request a copy of the personal data we hold about you.

service@montblanc.com

Montblanc-Simplo GmbH

Hellgrundweg 100

D-22525 Hamburg

Telephone: +49 40 84 001 0

Telefax: +49 40 84 001 300

H. Technical information

Battery	Lithium-ion battery
Connectivity	Bluetooth® Low Energy
Sensor	Accelerometer
Operations	• Locate function • Proximity alarm • Last seen • Motion alarm
Temperature	Operating temperature of 32–95°F (0–35°C)

I. Disclaimer

“The Bluetooth® word mark and logos are registered trademarks owned by Bluetooth SIG, Inc. and any use of such marks by Montblanc Simplo GmbH is under license.

All trademarks mentioned are the properties of their respective owner. iPhone ® is a trademark of Apple Inc., registered in the U.S. and other countries. App Store ™ is a service mark of Apple Inc.

Bluetooth No.:

Certifications

FCC ID: 2AENP-MB150911

IC: 20163-MB150911