ASSEMBLY AND INSTALLATION INSTRUCTIONS

T0624/T0625

VX21110W / VX21110BZ

WARNING: TO AVOID RISK OF ELECTRICAL SHOCK, BE SURE TO SHUT OFF POWER BEFORE INSTALLING OR SERVICING THIS FIXTURE.

NOTES: 1. Before installing, consult local electrical codes for wiring and grounding requirements.
2. READ AND SAVE THESE INSTRUCTIONS.

Hardware Package (included):

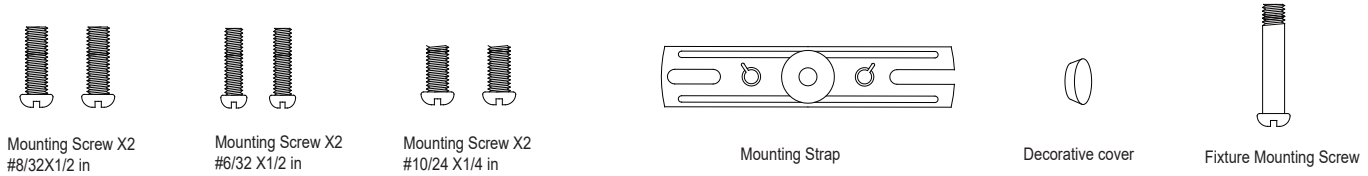

Important to Know:

1. If you are not familiar with state and local electrical codes, it is recommended that you consult with a qualified electrician.
2. This fixture requires a 120 VAC, 60 Hz power source.
3. For general safety and to avoid any possible damage to the sensor, be sure the power is switched "off" before adjustment.

Maximum Wattage: 32W

Working Temperature Range: -13°F ~ 113°F

Features:

1. Energy saving LED fixture.
2. Motion sensor: turns light ON automatically when motion is detected and turns light OFF automatically when motion stops.
3. Photocell keeps the light OFF during daylight hours.
4. When in manual override mode, use wall switch to change the function and perform the function conversion.

Note: Fixture can be wall mounted or eave mounted.

Wall Mounted **Eave Mounted**

Read notes section on page.4 for additional information about mounting location of fixture.
Light fixture and sensor should be mounted as shown above when installed (depending upon type of installation)

Before installing the light fixture under an eave, the sensor head must be rotated as shown in the next two steps for proper operation and to avoid the risk of electrical shock.

For eave mounted only:

◉ Swing the sensor head towards the mounting bracket.

◉ Rotate the sensor head clockwise 180˚ so the controls face down.

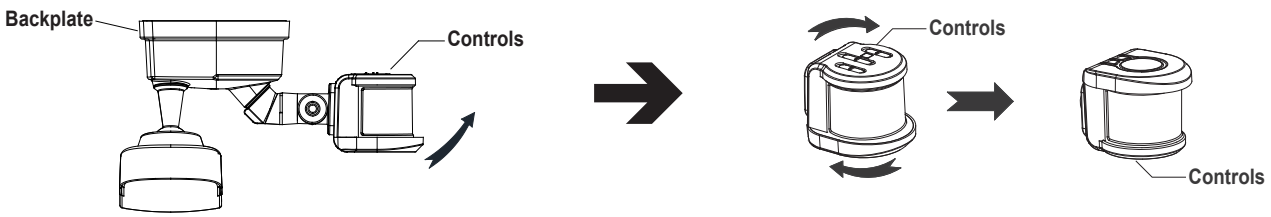

VAXCEL

211221

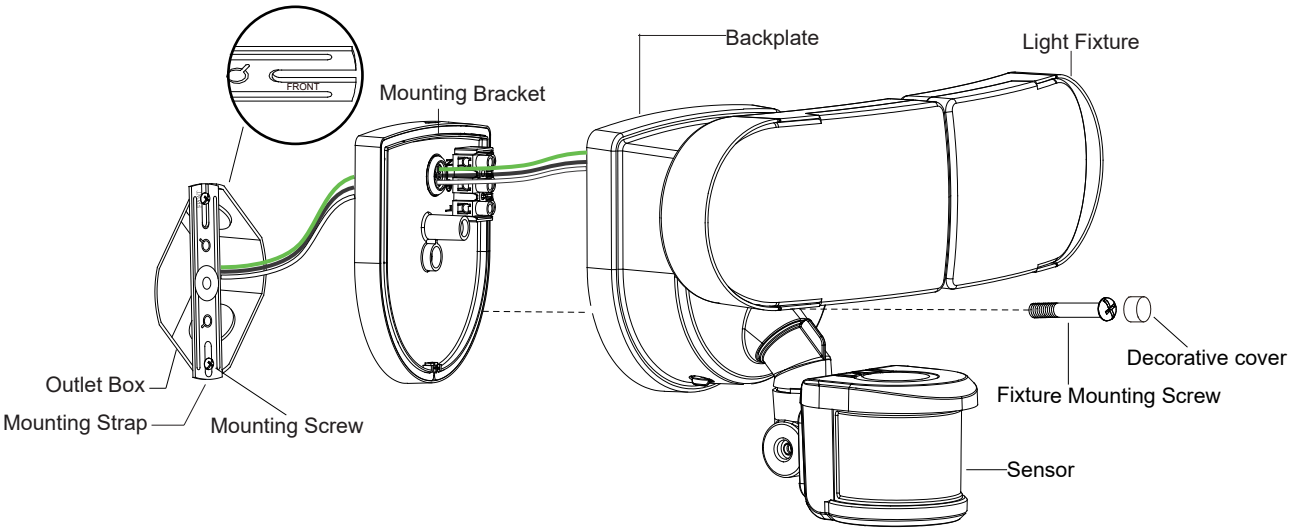

Installation Steps

Turn off the power at fuse or circuit box.

1. The fixture mounting bracket is pre-assembled on the light fixture. Unscrew both the decorative cover and the fixture mounting screw in order to remove the mounting bracket.

2. Install the mounting strap to the outlet box with the stamped word “FRONT” facing away from the outlet box, using two mounting screws that best fit the outlet box. Mounting bracket should sit flush against wall surface when secured. (Choose one matching pair of suitable mounting screws from the 3 pairs provided).

3. Pull out the source wires from the outlet box.Connect the black wire from the outlet box to the "L" interface of the terminal station on the mounting bracket. Connect the white wire from the outlet box to the "N" interface of the terminal station on the mounting bracket. Carefully tuck the wires back into the outlet box.

4. Place mounting bracket against the outlet box, insert the mounting bracket screw through the mounting bracket hole, thread mounting bracket screw into the center hole of the mounting strap. Tighten the mounting bracket screw securely.

5. Attach the backplate of the light fixture to the mounting fixture mounting screw. Then push the decorative cover firmly into the fixture mounting screw hole on the light fixture.

6. With silicone caulking compound, caulk completely around where the back plate meets the wall surface.
   CAUTION: Be sure to caulk completely where the back plate meets the wall surface to prevent water from seeping into the outlet box.

Turn on the power at the main fuse or circuit breaker box.

Adjusting the Sensor Head:

1. Aim sensor head toward desired detection area, maintaining a 5° - 40° downward angle to allow moisture to drain.
   Note: Make sure sensor head is positioned with control knob facing towards the ground.

2. You can rotate the sensor head up and down to change the coverage area. (See Fig. 1)
   Note: Range set too high may increase false triggering.
   (See Fig. 2 and Fig. 3)

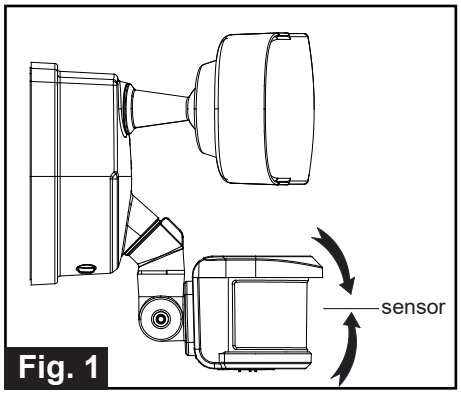

Fig. 1

VAXCEL
211221

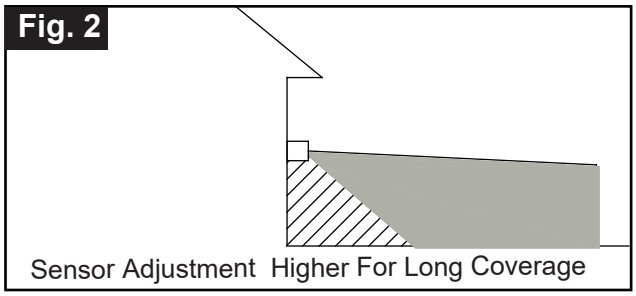

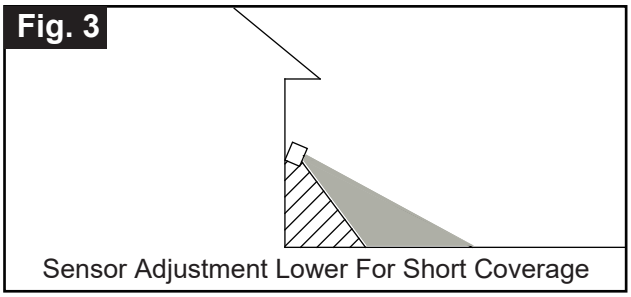

Adjusting the Light Head:

1. Gently grasp the light heads and tilt them up or down, left or right to adjust the light coverage area. Keep the light heads at least 1˝ (25mm) away from the sensor.(See Fig. 4)

2. Keep the light heads 30˚ below horizontal to avoid water damage and electrical shock.

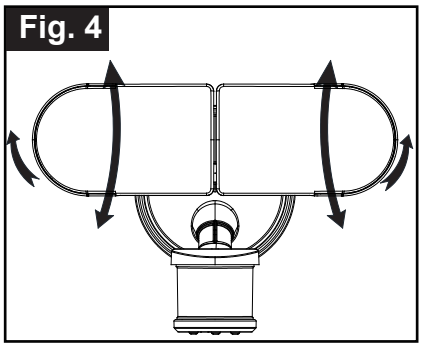

Sensitivity of Motion Sensor:

1. You can adjust the sensitivity of the motion sensor by using the “Sens” selector located on the bottom surface of the sensor. (See Fig.5)

2. Adjust motion sensor sensitivity to HIGH (H), MEDIUM (M), or LOW (L) to achieve desired performance.

3. Approximate range for each setting: 30 ft. (L), 50 ft. (M), 70 ft. (H).

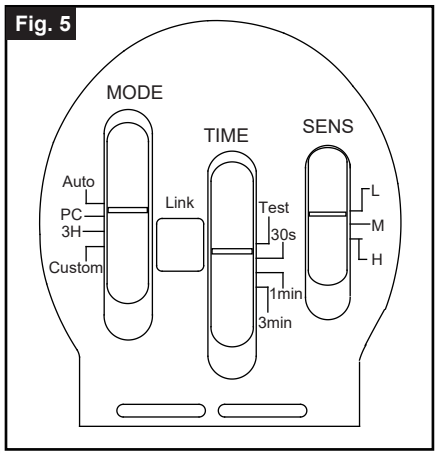

Choose a mode by sliding the switch on the bottom of the sensor. (See Fig.5)
Note: When power is first applied, the light will turn on to 100% brightness. The sensor will take 30 seconds to warm up.

1. TEST MODE (daytime and nighttime operation.)
   - Slide the Time switch the “Test” position.
   - The light turns to high-level brightness (5000K) when motion is detected, and stays on as long as the motion continues.
     Then it revert back to 2700K CCT Color and the low-level brightness (0~50%) as per setting about 5 seconds after motion is no longer detected.

2. AUTO MODE (nighttime operation only)
   - To “AUTO” mode, slide the Time switch to the desired time setting (30s/1min/3min). At dusk, the light turns on to pre-selected low-level brightness (2700K). When motion is detected, the light turns to high-level brightness (5000K) and stays on as long as motion continues. When the motion is no longer detected, the light at high-level brightness (5000K) remains on for the predetermined time you set (30s/1min/3min), then switches back to pre-selected low-level brightness (2700K) automatically.
   - The light turns off automatically at dawn.

   Note: You can adjust the low-level brightness(0~50%) by using the low-level brightness(0~50%) knob on the backplate (See Fig.6).

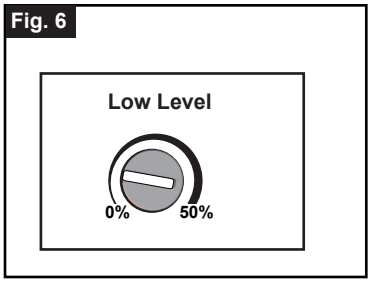

3. PC MODE (nighttime operation only)
   - In "PC" mode, the light will turn on at full brightness (5000K) at dusk and remains on until dawn.

VAXCEL
211221

4. 3 HOURS (3H) MODE (nighttime operation only)

- In “3H” mode, the light turns to high-level brightness (5000K) at dusk, and stays "ON" for 3 hours, then it turns to pre-selected low-level brightness (2700K). It turns to high-level brightness (5000K) when motion is detected, and stays on as long as motion continues. When motion is no longer detected, it remains on for the predetermined shut-off delay time you set (30s/1min/3min), then returns to the pre-selected low-level brightness (2700K) automatically.
- The light turns off automatically at dawn.

Note: You can adjust the low-level brightness(0~50%) by using the low-level brightness(0~50%) knob on the backplate (See Fig.6).

5. CUSTOM MODE (nighttime operation only):

- In "CUSTOM" mode, the light turn on full brightness (2700K) at dusk and off at dawn automatically.
- Set motion sensor operation to go on at a specific time. Turn the wall switch "OFF", and turn it "ON" twice within 3 seconds. The light will go into motion-sensor operation at the specified time every night. The light turns off automatically at dawn.

For example, a homeowner wants to have the light stay on high-level brightness from dusk to 8pm, and would like the light to go into "AUTO" motion sensor mode. To achieve this, the light homeowner will turn the wall switch "OFF", and turn it "ON" twice within 3 seconds. This sets the time the light goes into "AUTO" mode every day, the light will behave the same way.

To revert back to Default, turn the wall switch "OFF" and then turn it "ON" after 5 seconds.

Note: You can adjust the low-level brightness(0~50%) by using the low-level brightness(0~50%) knob on the backplate (See Fig.6).

When light units are linked, the Set motion sensor operation to go at a specific time is also linked when MODE settings are in Custom.

Fig. 7

Manual Override Operation Diagram

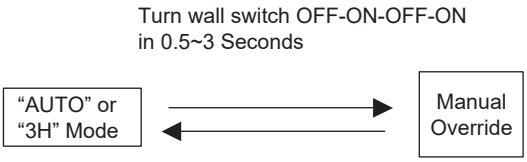

6. RF Linking Network Setup

From all the light units, select one as the main unit and the others as the sub-units;

First to setup all the sub-units by press the Link button twice within 3 seconds, the sub-units will flash once every 1 second meaning it is waiting to receive matching signal from the main light.

Then to setup the main unit by press and hold the Link button for 5 seconds, the main unit will flash slowly (once every 3 seconds), and when the sub-units have paired with the signal, the sub-units will stop flashing confirming it have paired with the main unit. (if pairing not successful, the sub-unit will keep flashing).

When all the sub-units have stop flashing, press the Link button on the main unit once to complete the pairing process. (the main unit will stop flashing)

After complete the pairing process, any light within the Link group range can send or receive the photo sensor or motion sensor signal from the other light and response accordingly.

Note: Maximum link up to 10 units per link group, each light can link within 120ft apart.

RF Linking

a. Photo Sensor Linking

When the Photo Sensor detect that the ambient brightness is less than the LUX set value.

- In "Auto" mode, the light turns on to Low-Level brightness (2700K) and send out a comprehensive signal.
  1) Linking other lamps set in "Auto" mode to enter Low-Level brightness
  2) Linking other lamps set in "3H", "PC", or "Custom" mode to enter High-Level brightness.
- In "PC", "3H", or "Custom" mode, the light turns on to High level brightness and send out a comprehensive signal.

1) Linking other lamps set in "Auto" mode to enter Low-Level brightness (2700K).
2) Linking other lamps set in "PC", or "3H" mode to enter High-Level brightness (5000K).
3) Linking other lamps set in "Custom" mode to enter High-Level brightness (2700K).

b. Motion Detect Linking

When the Motion Sensor detects

- In "Auto" mode, the lamp sends out a comprehensive signal to all the linked lamps to automatically switch to High-Level brightness (5000K) and remains on for predetermined time you set (30s/1min/3min).
- In "3H" or "Custom" mode,
  1) During the start of "3H" or "Custom" mode, the lamp will remain High-Level brightness and turn off the motion sensor until 3 hours or the custom set time is up.
  2) Once the "3H" or "Custom" set time is up, the lamp will turn on motion sensor and switch to "Auto" mode where the lamp sends out a comprehensive signal to all the linked lamps to automatically switch to High-Level brightness (5000K) and remains on for predetermined time you set (30s/1min/3min).

When the Photo Sensor detects that the ambient brightness is greater than the LUX set value,

- A comprehensive signal from the volunteers to inform all the Linking lamps to turn off automatically.

Unlink the unit from the Link Group

Press and hold the Link button on the sensor head for 3 seconds, the light will flash 3 times to confirm reset and remove from the Link Group.

All lights will need to be reset before setup the Link Group.

Strongly recommended to set all the linked lights to the same MODE to avoid any confusion of function error.

7. Manual Override (nighttime operation only)
   - To temporarily override the settings in “AUTO” or “3H” mode for on-demand continuous high-level brightness at night, turn the wall switch “OFF” then turn it “ON” twice within 3 seconds, the light remains on all night long. To shift back to “AUTO” or “3H” mode, turn the wall switch “OFF” then turn it “ON” twice within 3 seconds again. (See Fig.7)
   - The light turns off automatically at dawn.

   Note: When light units are linked, the Manual Override action is also linked when MODE settings are in Auto or 3H.

Customization Options:

Shut-off Delay

- The shut-off delay is the length of time the light will stay at brightness after motion has ceased to be detected.
- You can set the shut-off delay by rotating the delay time knob arrow so it points to the desired time setting within “TIME” range. To increase the shut-off delay, turn the knob clockwise. To decrease the shut-off delay, turn the knob counterclockwise.

Notes:

1. The sensitivity of the motion sensor will increase as the environmental temperature gets cooler. You may wish to make adjustments when the season changes.
   For best performance, gently clean the lens with a soft cloth every 1 or 2 months to assure maximum sensitivity.

2. For best performance, install fixture at least 8 feet above the ground. At such a height, the fixture will provide a detection distance of up to 70 feet at 77 degrees Fahrenheit. (See Fig.7)

3. The sensor detects movement across a detection range of 240 degrees. (See Fig.8)

4. The sensor will be more sensitive to motion across its detection path than motion directly towards it. (See Fig.9)

5. To reduce possible nuisances, do not mount the fixture near a heat source like an air conditioner, vent or furnace exhaust, or in a direction facing any reflecting object or other light source.

Where you install your fixture is important:
Be sure the light is mounted straight on the wall or eave; otherwise, the detection distance may be limited.

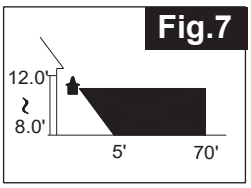

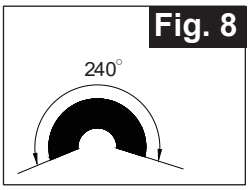

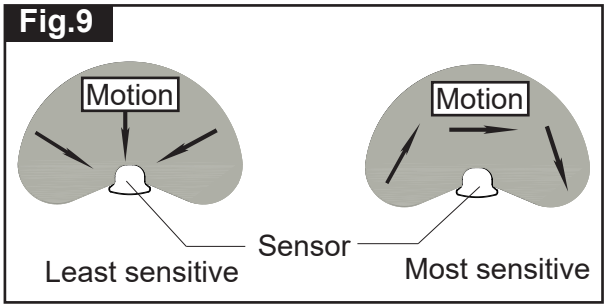

VAXCEL

211221

Troubleshooting

---The light does not come on at all:
1. Make sure the wall switch and circuit breaker are on.
2. Make sure the wiring is correct.
3. Cover the sensor with dark color cloth to verify that the ambient light level is not too high.

---The light comes on for no apparent reason
1. Re-aim the motion sensor.
2. Decrease the sensitivity setting.
3. Do not use a dimmer or timer to control the light fixture. Replace the dimmer or timer with a standard on/off wall

---The light flashes on and off:
1. Reposition the bulb away from the motion sensor.
2. Reposition the motion sensor.
3. The motion sensor is in “TEST” mode and warm up.

The following parts are available for re-order if damaged or missing. Call our toll free at 1-800-887-6326.

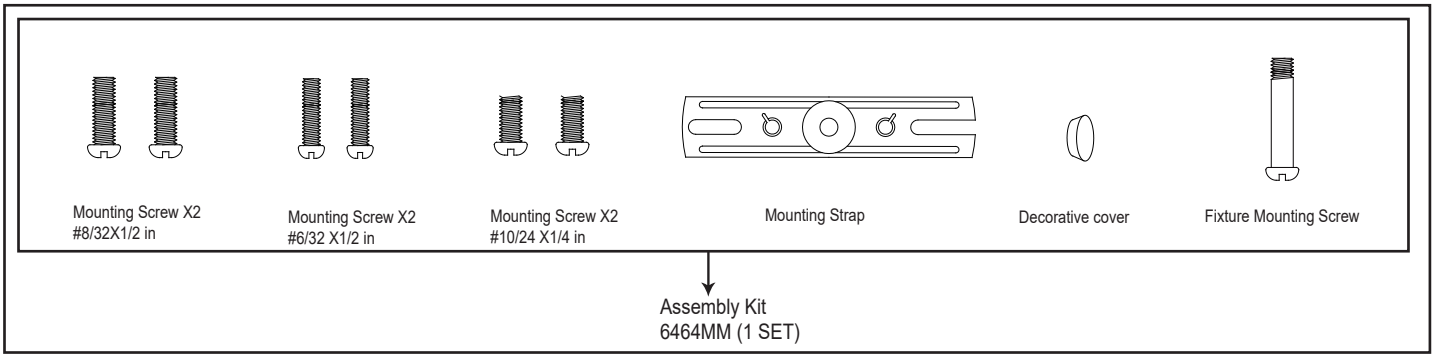

5-YEAR LIMITED WARRANTY:

All products are warranted to be free of defects in material and workmanship for five (5) years from date of purchase. This warranty is limited to the correction of any such defect, or the replacement of any such defective item(s), provided that: (a) we are properly notified and consent to return of the item(s) in question:(b) the item(s) is / are returned with proof of purchase date; and (c) it is found upon inspection by us that the item(s) is / are defective as noted above. This warranty does not cover labor costs, consequential damages, nor does it apply to any item(s) that have been improperly installed, overloaded, altered, or otherwise abused by the customer, its agent(s) or employee(s). Finishes are specially excluded from the terms of this warranty since they are subject to environmental maintenance deemed beyond our control. Other than the described obligation, we assume no further liability with respect to the sale or use of our products.We make no warranty, express or implied, and disclaim any warranty of merchantability or fitness for a particular purpose.

VAXCEL

211221

FCC Statement

This device complies with Part 15 of the FCC Rules. Operation is subject to the following two conditions:
(1) this device may not cause harmful interference, and (2) this device must accept any interference received, including interference that may cause undesired operation.

Changes or modifications to this unit not expressly approved by the party responsible for compliance could void the user's authority to operate the equipment.

NOTE: This equipment has been tested and found to comply with the limits for a Class B digital device, pursuant to Part 15 of the FCC Rules. These limits are designed to provide reasonable protection against harmful interference in a residential installation. This equipment generates uses and can radiate radio frequency energy and, if not installed and used in accordance with the instructions, may cause harmful interference to radio communications.

However, there is no guarantee that interference will not occur in a particular installation. If this equipment does cause harmful interference to radio or television reception, which can be determined by turning the equipment off and on, the user is encouraged to try to correct the interference by one or more of the following measures:

- ☐ Reorient or relocate the receiving antenna.
- ☐ Increase the separation between the equipment and receiver.
- ☐ Connect the equipment into an outlet on a circuit different from that to which the receiver is connected.
- ☐ Consult the dealer or an experienced radio/TV technician for help.

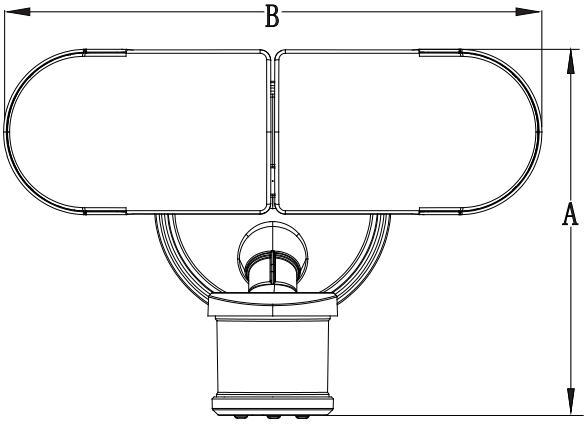

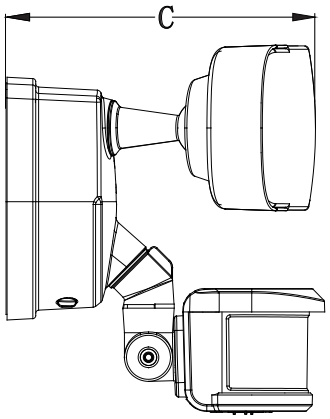

A: 7"

B:10-1/4"

C: 6"

VAXCEL

211221