S

ELLA-W1 series

IEEE 802.11a/b/g/n Wi-Fi, Bluetooth® 3.0+HS Modules

Data sheet

Abstract

This technical data sheet describes the ELLA-W1 series Wi-Fi and Bluetooth® multiradio modules, which are designed for both simultaneous and independent operations of Wi-Fi 802.11a/b/g/n and Bluetooth 3.0+HS (High Speed). These host-based modules include an integrated MAC/Baseband processor and RF front-end components and can connect to a host processor through its SDIO interface.

www.u-blox.com

UBX-15004476 - R08

Document information

Title	**ELLA-W1 series**
Subtitle	IEEE 802.11a/b/g/n Wi-Fi, Bluetooth® 3.0+HS Modules
Document type	Data sheet
Document number	UBX-15004476
Revision and date	R08 30-Sep-2019
Disclosure restriction	

Product status	Corresponding content status	
Functional sample	Draft	For functional testing. Revised and supplementary data will be published later.
In development / Prototype	Objective specification	Target values. Revised and supplementary data will be published later.
Engineering sample	Advance information	Data based on early testing. Revised and supplementary data will be published later.
Initial production	Early production information	Data from product verification. Revised and supplementary data may be published later.
Mass production / End of life	Production information	Document contains the final product specification.

This document applies to the following products:

Product name	Type number	Firmware version	PCN reference	Product status
ELLA-W131	ELLA-W131-00B-00	-	UBX-16023325	Mass Production
ELLA-W131-A	ELLA-W131-00A-00	-	N/A	
ELLA-W133	ELLA-W133-00B-00	-	N/A	
ELLA-W133-A	ELLA-W133-00A-00	-	N/A	
ELLA-W161	ELLA-W161-00B-00	-	N/A	
ELLA-W161-A	ELLA-W161-00A-00	-	N/A	
ELLA-W163	ELLA-W163-00B-00	-	N/A	
ELLA-W163-A	ELLA-W163-00A-00	-	N/A	

u-blox or third parties may hold intellectual property rights in the products, names, logos and designs included in this document. Copying, reproduction, modification or disclosure to third parties of this document or any part thereof is only permitted with the express written permission of u-blox.
The information contained herein is provided “as is” and u-blox assumes no liability for its use. No warranty, either express or implied, is given, including but not limited to, with respect to the accuracy, correctness, reliability and fitness for a particular purpose of the information. This document may be revised by u-blox at any time without notice. For the most recent documents, visit www.u-blox.com.
Copyright © u-blox AG.

Contents

Document information **2**
Contents **3**
1 Functional description **5**
1.1 Overview 5
1.2 Applications 5
1.3 Product features 6
1.4 Block diagrams 6
1.5 Product description 9
1.6 Supported features 9
1.7 Additional reserved MAC addresses 9
2 Host interfaces **11**
2.1 SDIO interface 11
3 Pin definition **12**
3.1 Pin description 12
4 Electrical specification **14**
4.1 Absolute maximum ratings 14
4.2 Operating conditions 14
4.3 Digital pad ratings 15
4.4 Peak current consumption 15
4.5 Wi-Fi power consumption 16
4.6 Bluetooth power consumption 18
4.7 Radio specifications 18
4.7.1 Wi-Fi 18
4.7.2 Bluetooth 21
5 Mechanical specifications **22**
5.1 Recommended footprint 23
6 Qualification and approvals **24**
6.1 European Union regulatory compliance 24
6.1.1 Compliance with the RoHS directive 24
6.1.2 Equipment classes 24
6.2 FCC and IC compliance 25
6.2.1 FCC statement 25
6.2.2 IC compliance 25
6.2.3 Conformité aux normes d'IC 26
6.2.4 FCC and IC IDs 27
6.3 Japan radio equipment compliance 27
6.4 NCC Taiwan compliance 28
6.4.1 Taiwan NCC Warning Statement 28
6.4.2 ELLA-W131 labeling requirements for end product 28
6.4.3 ELLA-W161 labeling requirements for end product 29

6.5 Australia and New Zealand regulatory compliance 29
6.6 Bluetooth qualification....29
6.7 Approved antennas list....29
7 Product handling.... 31
7.1 Packaging 31
7.1.1 Reels 31
7.1.2 Tapes....31
7.2 Shipment, storage and handling 32
7.2.1 Moisture sensitivity levels 32
7.3 Reflow soldering 32
7.4 ESD handling precautions....32
8 Labeling and ordering information 33
8.1 Product labeling....33
8.2 Explanation of codes 34
8.3 Ordering codes....35
Appendix 36
A Glossary 36
Related documents 37
Revision history....37
Contact.... 39

1 Functional description

1.1 Overview

The ELLA-W1 series is targeted for integration into different OEM products. These modules are designed for both simultaneous and independent operation of the following technologies:

- IEEE 802.11a/b/g/n payload data rates for Wi-Fi
- Bluetooth v3.0+HS (High Speed)
- Bluetooth v2.1+EDR (Enhanced Data Rate)

The ELLA-W1 series includes an integrated MAC/Baseband processor and Radio Frequency (RF) front-end components and can connect to a host processor through an SDIO interface. The ELLA modules are offered in four versions (see section 8.3 Ordering codes and section 1.4 Block diagrams). Host driver support for common operating systems such as Linux and Android are available. The modules are radio type approved for Europe (CE), the United States (FCC), Canada (IC[1]), Japan[2] (MIC), Taiwan[3] (NCC) and Australia/New Zealand[4] (ACMA). Approvals for other countries may be possible upon inquiry.

1.2 Applications

- Wi-Fi and Bluetooth networks
- Audio/video devices and accessories
- Access to laptops, mobile phones, and similar consumer devices
- Automotive and industrial networking
- Home/building automation

[1] Official designation is now Innovation, Science and Economic Development Canada (ISEDC)

[2] Only ELLA-W131 and ELLA-W131-A

[3] Only professional grades of ELLA-W131 and ELLA-W161

[4] Only ELLA-W131, ELLA-W131-A, ELLA-W161 and ELLA-W161-A

1.3 Product features

	ELLA-W131	ELLA-W133	ELLA-W161	ELLA-W163
Grade				
Automotive	*	*	*	*
Professional	•	•	•	•
Standard				
Radio				
Bluetooth qualification	v3.0+HS			
Bluetooth profiles	HCI			
Bluetooth BR/EDR	•	•	•	•
Wi-Fi IEEE 802.11 standards	b/g/n		a/b/g/n	
Wi-Fi 2.4 / 5 [GHz]	2.4		2.4 and 5	
Bluetooth output power conducted [dBm]	7	10	7	10
Wi-Fi output power conducted [dBm]	18	18	18	18
Antenna type	1p	2p	1p	2p
OS support				
Android / Linux drivers (from u-blox)	•	•	•	•
QNX (via third party)	•	•	•	•
Interfaces				
SDIO [version]	v2	v2	v2	v2
PCM (Bluetooth audio)	1	1	1	1
Features				
Micro Access Point [max connects]	10	10	10	10
AES hardware support	•	•	•	•
Wi-Fi direct	•	•	•	•
Factory-assigned MAC address	•	•	•	•
Factory calibrated RF	•	•	•	•
Router function with TOBY-L2	•			

1p = 1 antenna pin for combined Bluetooth and Wi-Fi
2p = 2 antenna pins, one each for Bluetooth and Wi-Fi

* = Without RF shield

Table 1: Key features of ELLA-W1 series

1.4 Block diagrams

The block diagrams of the ELLA-W1 series are provided in this section. These block diagrams are valid for both professional and automotive grade variants.

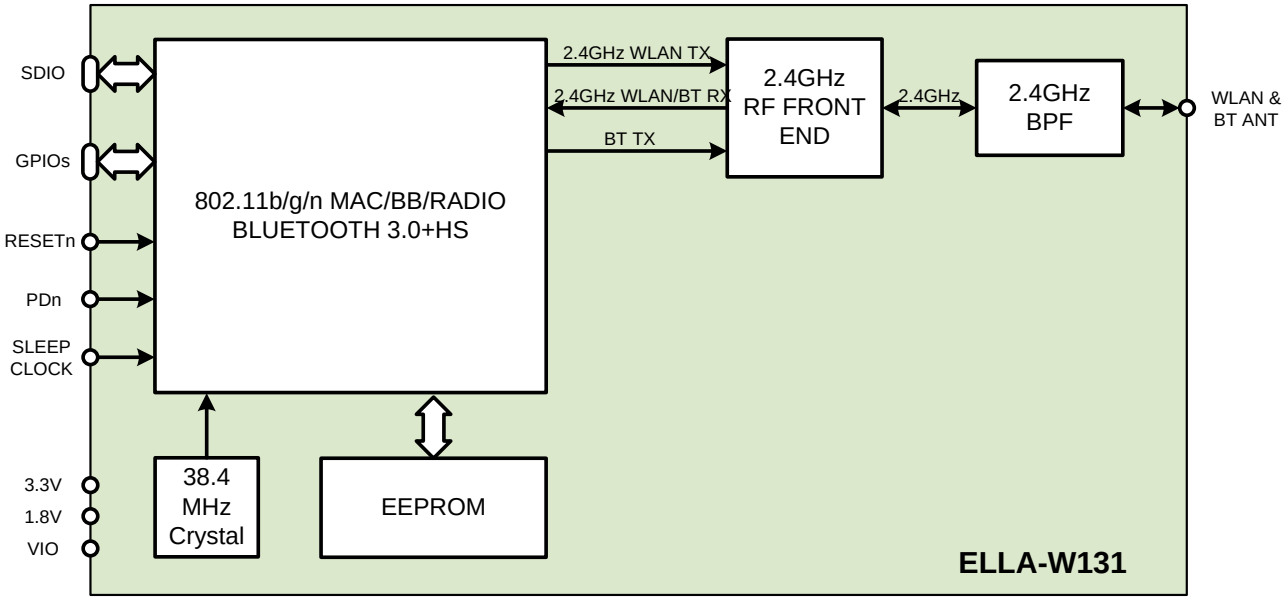

Figure 1: ELLA-W131 block diagram

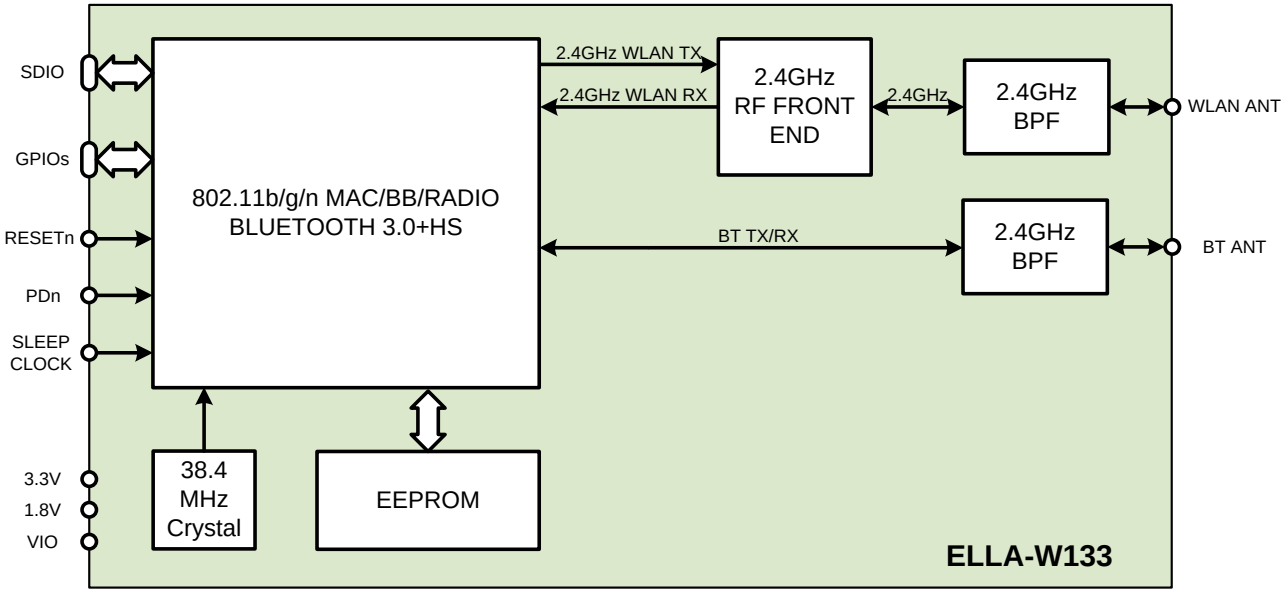

Figure 2: ELLA-W133 block diagram

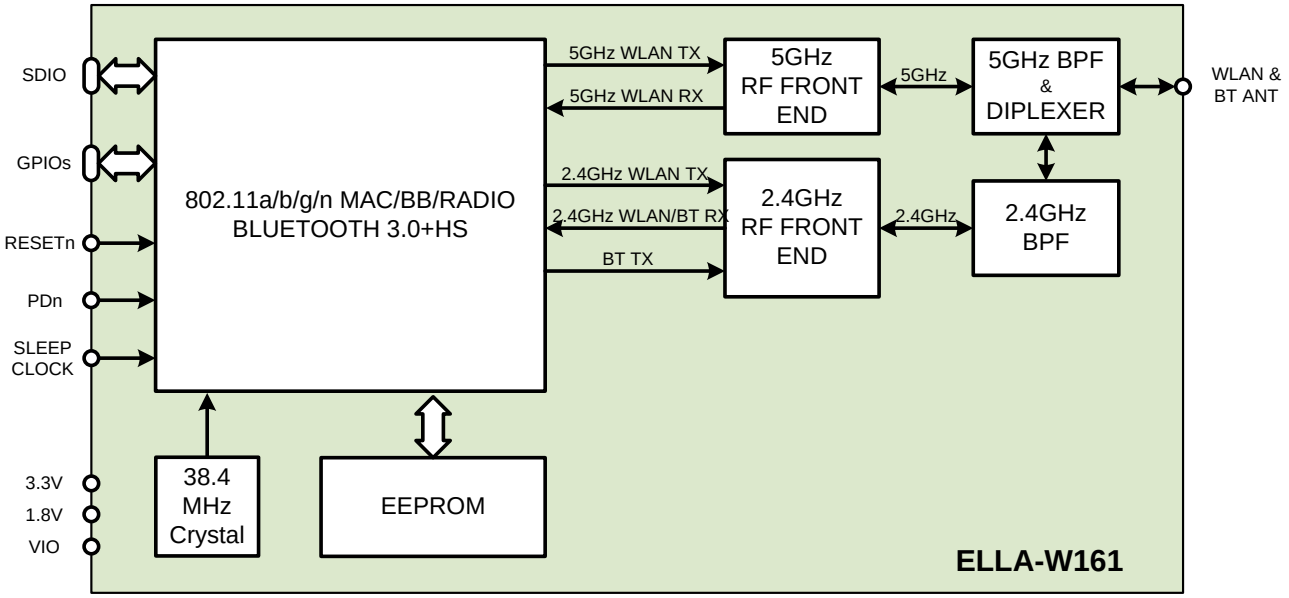

Figure 3: ELLA-W161 block diagram

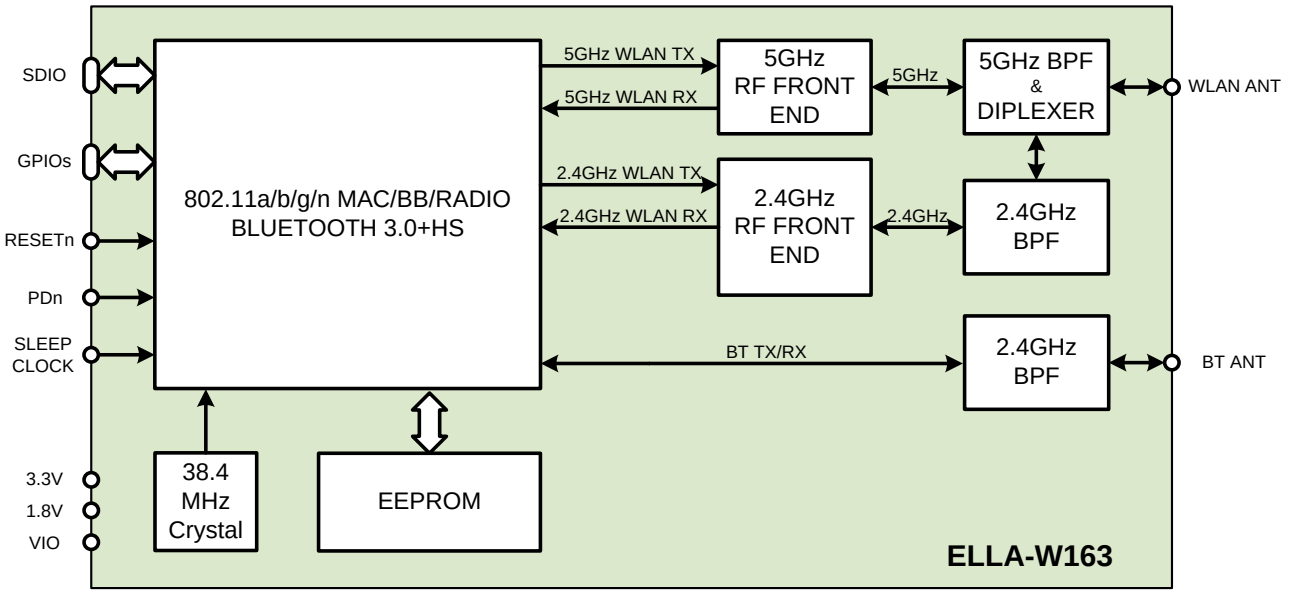

Figure 4: ELLA-W163 block diagram

1.5 Product description

Model	Description
ELLA-W131	Professional grade, with RF shield box, singleband (2.4 GHz), 1 antenna pin. Can be combined with TOBY LTE module for router functionality.
ELLA-W133	Professional grade, with RF shield box, singleband (2.4 GHz), 2 antenna pins.
ELLA-W161	Professional grade, with RF shield box, dual-band (2.4 and 5 GHz), 1 antenna pin.
ELLA-W163	Professional grade, with RF shield box, dual-band (2.4 and 5 GHz), 2 antenna pins.
ELLA-W131-A	Automotive grade, single-band (2.4 GHz), 1 antenna pin. Can be combined with TOBY LTE module for router functionality.
ELLA-W133-A	Automotive grade, single-band (2.4 GHz), 2 antenna pins.
ELLA-W161-A	Automotive grade, dual-band (2.4 and 5 GHz), 1 antenna pin.
ELLA-W163-A	Automotive grade dual-band (2.4 and 5 GHz), 2 antenna pins.

☞ For maximum throughput during simultaneous Wi-Fi (AP) and Bluetooth operation, the Bluetooth Coexistence Arbiter (BCA) settings should be optimized by the host system software.

1.6 Supported features

- Standards: IEEE 802.11a(optional)/b/g/n/d/e/h/i/k[5]/r[5]/w
- Wi-Fi 802.11a/b/g/n station and micro access point operation for up to 10 clients
- Four MAC-addresses reserved per module
- Support of Wi-Fi Direct mode
- 802.11 PHY data rates of up to 72 Mbps (20 MHz channel) and up to 150 Mbps (40 MHz channel)
- Hardware encryption engine for 128-bit AES (AES-CCMP for WPA2, AES-CMAC)
- WEP 64- and 128-bit encryption with hardware TKIP processing (WPA)
- Embedded security supplicant
- WAPI support
- Background scan mode
- Bluetooth v3.0+HS (High Speed)
- Bluetooth v2.1+EDR (backward compatibility)
- Wide temperature operation range -40 °C to +85 °C
- Compact 14.8 mm x 14.8 mm footprint, surface mounting
- SDIO high-speed interface
- Support for low-power modes
- CE/FCC/IC radio type approved
- RoHS compliant
- Automotive qualification tests according to ISO 16750-4

1.7 Additional reserved MAC addresses

The ELLA-W1 series has four unique consecutive MAC addresses reserved for each module, from which the first two addresses have already been stored in the configuration inside the EEPROM during the production. The first address is used for the Bluetooth communication and the second add+ress is configured for the usage with the Wi-Fi communication. The remaining two MAC addresses are not used in the manufacturing configuration, but are reserved for the usage with the module.

[5] Not supported by firmware currently.

MAC address	Assignment	Last two bits of MAC address	Example
Module1, address 1	Bluetooth	0b00	*D4:CA:6E:44:00:04*
Module1, address 2	Wi-Fi	0b01	D4:CA:6E:44:00:05
Module1, address 3	(free for use)	0b10	D4:CA:6E:44:00:06
Module1, address 4	(free for use)	0b11	D4:CA:6E:44:00:07
Module2, address 1	Bluetooth	0b00	*D4:CA:6E:44:00:08*
Module2, address 2	Wi-Fi	0b01	D4:CA:6E:44:00:09
Module2, address 3	(free for use)	0b10	D4:CA:6E:44:00:0A
Module2, address 4	(free for use)	0b11	D4:CA:6E:44:00:0B

Table 2: MAC address assignment

2 Host interfaces

2.1 SDIO interface

ELLA-W1 series modules support an SDIO device interface that conforms to the industry standard SDIO Full-Speed specification and allows a host controller using the SDIO bus protocol to access the Wi-Fi and Bluetooth functions. The modules also support High-Speed mode as defined in the SDIO 1.2 specification.

The module's SDIO host interface pins are powered from the VIO voltage supply. A module acts as the device on the SDIO bus. The SDIO interface supports SDIO modes at the full clock range of 0 to 50 MHz which allows a maximum throughput of 200 Mbps.

See the ELLA-W1 System Integration Manual [2] for information about SDIO timing.

3 Pin definition

3.1 Pin description

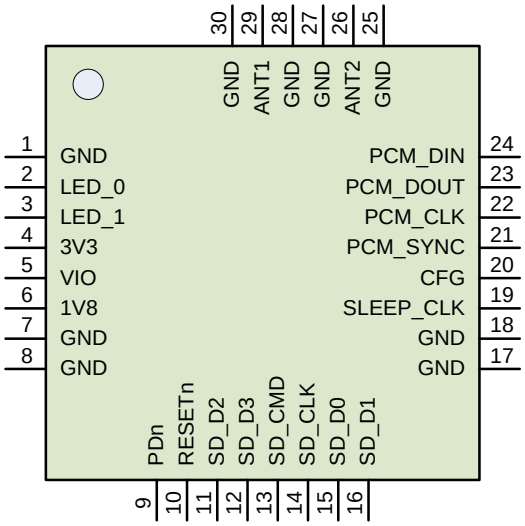

Figure 5: Pin assignment

No	Name	Pin Type	Description
1	GND	Ground	Ground
2	LED_0	I/O	LED output (GPIO_1 of Radio/Baseband processor), Wi-Fi activity[6]
3	LED_1	I/O	LED output (GPIO_17 of Radio/Baseband processor), Bluetooth activity[6]
4	3V3	Power	3.3V Power supply (3.0 V...3.6 V)
5	VIO	Power	VIO Supply (1.8 V or 3.3 V)
6	1V8	Power	1.8 V Supply (1.7 V...1.9 V)
7	GND	Ground	Ground
8	GND	Ground	Ground
9	PDn	I	Full power down (active low), has internal pull-up to VIO pin
10	RESETn	I	Reset (active low), has weak internal pull-up to VIO pin
11	SD_D2	I/O	SDIO Data line bit [2]
12	SD_D3	I/O	SDIO Data line bit [3]
13	SD_CMD	I/O	SDIO Command
14	SD_CLK	I	SDIO Clock input
15	SD_D0	I/O	SDIO Data line bit [0]
16	SD_D1	I/O	SDIO Data line bit [1]
17	GND	Ground	Ground
18	GND	Ground	Ground

[6] Possible to use as a LED output depending on firmware (driver) version. Regardless of the I/O supply (1.8 V or 3.3 V), the supply to the actual board LED always needs to use 3.3 V on the other end of the LED and works as open drain circuitry in that case. LED current limiting resistor should be used. Maximum sink to the ground current - 10 mA.

No	Name	Pin Type	Description
19	SLEEP_CLK	I	Clock input for external sleep clock source (32.768 kHz)[7]
20	CFG	I/O	Configuration pin[8]
21	PCM_SYNC	I/O	GPIO_14 of Radio/Baseband processor, output if master, input if slave
22	PCM_CLK	I/O	GPIO_13 of Radio/Baseband processor, output if master, input if slave
23	PCM_DOUT	O	GPIO_12 of Radio/Baseband processor, output
24	PCM_DIN	I	GPIO_11 of Radio/Baseband processor, input
25	GND	Ground	Ground
26	ANT2	I/O, RF	Bluetooth antenna for ELLA-W133 and ELLA-W163 module, at ELLA-W131 and ELLA-W161 not connected
27	GND	Ground	Ground
28	GND	Ground	Ground
29	ANT1	I/O, RF	Wi-Fi + Bluetooth antenna for ELLA-W131 and ELLA-W161 module, Wi-Fi only antenna for ELLA-W133 and ELLA-W163 module
30	GND	Ground	Ground

Table 3: ELLA-W1 series pin description

[7] Needed during power save operation. Not required for full power mode and for automotive use (firmware and driver version 14.44). Mandatory for all other releases with sleep mode support. Sleep clock signal requirements: frequency 32.768 kHz ±250 ppm, low level from 0 to 0.25 V, high level from 0.8 to 2.0 V, duty cycle 20-80%, slew rate less than 100 nS (10-90%).

[8] Leave it unconnected when 32.768 kHz Sleep Clock provided, pull down by 47 K resistor for Sleep Clock less operation.

4 Electrical specification

⚠ Stressing the device above one or more of the ratings listed in the Absolute Maximum Rating section may cause permanent damage. These are stress ratings only. Operating the module at these or at any conditions other than those specified in the Operating conditions section of this document should be avoided. Exposure to absolute maximum rating conditions for extended periods may affect device reliability.

☞ Operating condition ranges define those limits within which the functionality of the device is guaranteed. Where application information is given, it is advisory only and does not form part of the specification.

4.1 Absolute maximum ratings

Symbol	Description	Min.	Max.	Units
3V3	Power supply voltage 3.3 V	-0.3	3.6	V
1V8	Power supply voltage 1.8 V	-0.3	2.0	V
VIO	I/O supply voltage 1.8 V/3.3 V	-0.3	3.6	V
$T_{STORAGE}$	Storage temperature	-40	+85	°C

Table 4: Absolute maximum ratings

⚠ The product is not protected against overvoltage or reversed voltages. If necessary, voltage spikes exceeding the power supply voltage specification, given in table above, must be limited to values within the specified boundaries by using appropriate protection devices.

4.2 Operating conditions

Symbol	Parameter	Min.	Typ	Max.	Units
3V3	Power supply voltage 3.3 V	3.1	3.3	3.6	V
1V8	Power supply voltage 1.8 V	1.74	1.8	1.89	V
VIO	I/O supply voltage 1.8 V/3.3 V	1.62	1.8	1.98	V
		3.0	3.3	3.6	V
T_A	Ambient operating temperature	-40	-	+85	°C
Ripple Noise	Peak-to-peak voltage ripple on 3V3 and 1V8 supply lines.	-	-	10	mV

Table 5: Operating conditions

4.3 Digital pad ratings

Symbol	Parameter	Mode[9]	Min.	Max.	Units
V_{IH}	Input high voltage	1.8 V	0.8*1V8	1V8+0.3	V
		3.3 V	0.7*3V3	3V3+0.3	V
V_{IL}	Input low voltage	1.8 V	-0.3	0.3*1V8	V
		3.3 V	-0.3	0.3*3V3	V
V_{HYS}	Input hysteresis	1.8 V	150	-	mV
		3.3 V	200	-	mV
V_{OH}	Output high voltage	1.8 V	1V8-0.4	-	V
		3.3 V	3V3-0.4	-	V
V_{OH}	Output low voltage	1.8 V	-	0.4	V
		3.3 V	-	0.4	V

Table 6: Digital pad ratings

4.4 Peak current consumption

Operation Mode			Peak current[10] (mA)		
			1.8 V	VIO[11]	3.3 V
RX	2.4 GHz		160	10	0.1
	5 GHz		170	10	14
TX	2.4 GHz	+18 dBm	140	10	200
		+15 dBm	140	10	170
		+12 dBm	140	10	145
		+6 dBm	140	10	120
	5 GHz	+15 dBm	150	10	200
		+12 dBm	150	10	170
		+6 dBm	150	10	150

Table 7: Peak current consumption

[9] IO voltage, see Table 5 for possible IO voltage range.

[10] Peak values are shown. The average current for full operation mode (not a power save mode) strongly depends on RX/TX time ratio and remains within the range between the peak values of RX and TX.

[11] VIO current is shown for 3.3 V I/O voltage.

4.5 Wi-Fi power consumption

Operation Mode: 2.4 GHz Wi-Fi client mode, Bluetooth in deep sleep	Average current (mA)		
	VIO (1.8 V)	3.3 V	1.8 V
RX 11b 11 Mb/s	0.43	0.08	125
RX 11g 54 Mb/s	0.88	0.08	133
RX 11n 72 Mb/s	1.1	0.08	138
RX 11n 72 Mb/s, A-MPDU on	1.9	0.08	146
TX 11b 11 Mb/s 10 dBm	0.1	94	112
TX 11b 11 Mb/s 12 dBm	0.1	101	114
TX 11b 11 Mb/s 15 dBm	0.1	116	114
TX 11b 11 Mb/s 18 dBm	0.1	134	114
TX 11g 54 Mb/s 10 dBm	0.11	95	124
TX 11g 54 Mb/s 12 dBm	0.11	100	124
TX 11g 54 Mb/s 15 dBm	0.11	110	124
TX 11n 72 Mb/s 10 dBm	0.1	94	124
TX 11n 72 Mb/s 12 dBm	0.1	98	124
TX 11n 72 Mb/s 15 dBm	0.1	110	124
TX 11n 72 Mb/s 10 dBm, A-MPDU on	0.05	92	130
TX 11n 72 Mb/s 12 dBm, A-MPDU on	0.05	97	130
TX 11n 72 Mb/s 15 dBm, A-MPDU on	0.05	118	132

Table 8: Current consumption in 2.4 GHz Wi-Fi client mode

Operation Mode: 5 GHz Wi-Fi client mode, Bluetooth in deep sleep	Average current (mA)		
	VIO (1.8V)	3.3V	1.8V
RX 11a 54 Mb/s	1.1	14	151
RX 11n (HT20) 72 Mb/s	1.0	14	153
RX 11n (HT20) 72 Mb/s, A-MPDU on	1.4	14	160
TX 11a 54 Mb/s 10 dBm	0.11	120	135
TX 11a 54 Mb/s 12 dBm	0.11	128	135
TX 11a 54 Mb/s 15 dBm	0.11	146	138
TX 11n (HT20) 72 Mb/s 10 dBm	0.11	122	134
TX 11n (HT20) 72 Mb/s 12 dBm	0.11	127	135
TX 11n (HT20) 72 Mb/s 15 dBm	0.11	144	140
TX 11n (HT20) 72 Mb/s 10 dBm, A-MPDU on	0.1	116	142
TX 11n (HT20) 72 Mb/s 12 dBm, A-MPDU on	0.1	120	142
TX 11n (HT20) 72 Mb/s 15 dBm, A-MPDU on	0.1	139	142

Table 9: Current consumption in 5 GHz Wi-Fi client mode

Operation Mode: 2.4 GHz IEEE Power Save, Bluetooth in deep sleep	Average current (mA)		
	VIO (1.8V)	3.3V	1.8V
Wi-Fi in deep sleep	0.006	0.012	0.032
Wi-Fi DTIM 1	0.006	0.012	1.175
Wi-Fi DTIM 3	0.006	0.012	0.413

Table 10: Current consumption in 2.4 GHz Wi-Fi IEEE power save

Operation Mode: 2.4 GHz AP mode, 802.11b/g/n, 20 MHz, long guard interval, A-MPDU on		Average current (mA)		
		VIO (1.8V)	3.3 V	1.8 V
No power save	Idle	0.06	0.08	134
	Active, Open, RX	2.12	0.08	150
	Active, Open, TX	0.013	102	134
	Active, WPA2, RX	1.98	0.08	158
	Active, WPA2, TX	0.017	97	139
Inactivity based power saving Beacon period = 100 ms DTIM = 1 Sleep period = 17 ms Inactivity timeout = 200 ms Awake period = 2 ms NULL data protection = enabled	Idle	0.08	0.08	25
	Active, Open, RX	2.11	12.5	151
	Active, Open, TX	0.02	102	134
	Active, WPA2, RX	1.9	0.08	158
	Active, WPA2, TX	0.012	104	139

Table 11: Current consumption in 2.4 GHz Wi-Fi AP mode

Operation Mode: 5 GHz AP mode, 802.11a/n, 20 MHz, long guard interval, A-MPDU on		Average current (mA)		
		VIO (1.8 V)	3.3 V	1.8 V
No power save	Idle	0.056	12	139
	Active, Open, RX	1.98	14	160
	Active, Open, TX	0.02	128	149
	Active, WPA2, RX	2.0	14	170
	Active, WPA2, TX	0.02	128	161
Inactivity based power saving Beacon period = 100 ms DTIM = 1 Sleep period = 17 ms Inactivity timeout = 200 ms Awake period = 2 ms NULL data protection = enabled	Idle	0.09	2	24
	Active, Open, RX	1.98	14	164
	Active, Open, TX	0.02	124	151
	Active, WPA2, RX	2.03	14	173
	Active, WPA2, TX	0.02	128	163

Table 12: Current consumption in 5 GHz Wi-Fi AP mode

4.6 Bluetooth power consumption

Operation Mode: Bluetooth, Wi-Fi in deep sleep	Current (mA)		
	VIO (1.8 V)	3.3 V	1.8 V
Page scan at 1.28 s	0.006	0.015	0.267
Inquiry scan at 1.28 s	0.006	0.015	0.267
Page & Inquiry scan at 1.28 s	0.006	0.015	0.498
HV3 SCO mode ACL sniff 0x800	0.41	0.08	11.5
eSCO mode EV3 ACL sniff 0x800	0.41	0.08	11.7
Chip deep sleep	0.06	0.015	0.035
Peak Bluetooth TX 4 dBm	0.006	0.015	30.8
Peak Bluetooth RX	0.006	0.015	28.0
Bluetooth idle (sleep mode)	0.006	0.08	5.06
1.28 s ACL sniff mode	0.012	0.015	0.107
ACL DM1	0.012	0.075	12.6
ACL 2-DH1	0.012	0.015	13.5
ACL 3-DH5	0.012	0.015	14.0
A2DP offload	0.47	0.08	20.4
A2DP, BDR 330 kb/s	0.14	0.08	15.7
A2DP, EDR 330 kb/s	0.14	0.08	13.5

Table 13: Current consumption for Bluetooth modes

4.7 Radio specifications

4.7.1 Wi-Fi

The ELLA-W1 series modules support dual-band Wi-Fi with 802.11b/g/n operation in the 2.4 GHz radio band. The 802.11a/n operation in the 5 GHz radio band is supported in ELLA-W161 and ELLA-W163 only. The module is designed to operate in only one frequency band at a time.

Parameter		Operation Mode			Specification
RF Frequency Range		802.11b/g/n			2.400 – 2.500 GHz
		802.11a/n			4.900 – 5.825 GHz
Modulation		802.11b			CCK and DSSS
		802.11a/g/n			OFDM
Supported Data Rates		802.11b			1, 2, 5.5, 11 Mbps
		802.11a/g			6, 9, 12, 18, 24, 36, 48, 54 Mbps
		802.11n			MCS0 - MCS7
Supported Bandwidth		802.11n			20, 40 MHz
Supported Guard Interval		802.11n			400, 800 ns
Maximum Transmit Power (calibrated)		802.11b			18 dBm ± 1 dB
		802.11a/g/n			15 dBm ± 1 dB
Receiver Sensitivity (typical)	2.4 GHz	802.11b		1 Mbps	-96 dBm
				11 Mbps	-87 dBm
		802.11g		6 Mbps	-89 dBm
				54 Mbps	-71 dBm
		802.11n	20 MHz	MCS0	-88 dBm
				MCS7	-69 dBm
			40 MHz	MCS0	-85 dBm
				MCS7	-66 dBm
	5 GHz	802.11a		6 Mbps	-92 dBm
				54 Mbps	-75 dBm
		802.11n	20 MHz	MCS0	-91 dBm
				MCS7	-72 dBm
			40 MHz	MCS0	-89 dBm
				MCS7	-69 dBm

Table 14: Wi-Fi radio specifications

Channel	Frequency, GHz
1	2.412
2	2.417
3	2.422
4	2.427
5	2.432
6	2.437
7	2.442
8	2.447
9	2.452
10	2.457
11	2.462
12	2.467
13	2.472

Table 15: 2.4 GHz Band supported channels, 20 MHz bandwidth

Channel	Frequency, GHz
1 – 5	2.422
2 – 6	2.427
3 – 7	2.432
4 – 8	2.437
5 – 9	2.442
6 – 10	2.447
7 – 11	2.452

Table 16: 2.4 GHz Band supported channels, 40 MHz bandwidth

Channel	Frequency, GHz
36	5.180
40	5.200
44	5.220
48	5.240
52	5.260
56	5.280
60	5.300
64	5.320
100	5.500
104	5.520
108	5.540
112	5.560
116	5.580
120	5.600
124	5.620
128	5.640
132	5.660
136	5.680
140	5.700
149	5.745
153	5.765
157	5.785
161	5.805
165	5.825

Table 17: 5 GHz Band supported channels, 20 MHz bandwidth

Channel	Frequency, GHz
36 – 40	5.190
44 – 48	5.230
52 – 56	5.270
60 – 64	5.310
100 – 104	5.510
108 – 112	5.550
116 – 120	5.590
124 – 128	5.630
132 – 136	5.670
149 – 153	5.755
157 – 161	5.795

Table 18: 5 GHz Band supported channels, 40 MHz bandwidth

4.7.2 Bluetooth

Parameter	Specifications
RF Frequency Range	2.400 – 2.4835 GHz
Supported Modes	Bluetooth v2.1+EDR, Bluetooth v3.0+HS
Number of channels	79
Modulation	1 Mbps: GFSK (BDR) 2 Mbps: π/4-DQPSK (EDR) 3 Mbps: 8-DPSK (EDR)
Transmit Power (typical)	ELLA-W131, ELLA-W161: +7 dBm ELLA-W133, ELLA-W163: +10 dBm
Receiver Sensitivity (typical)	BDR: -90 dBm EDR: -87 dBm

Table 19: Bluetooth radio specifications

5 Mechanical specifications

The ELLA-W1 series professional grade modules have an RF shield box while the automotive grade modules do not have the RF shield box.

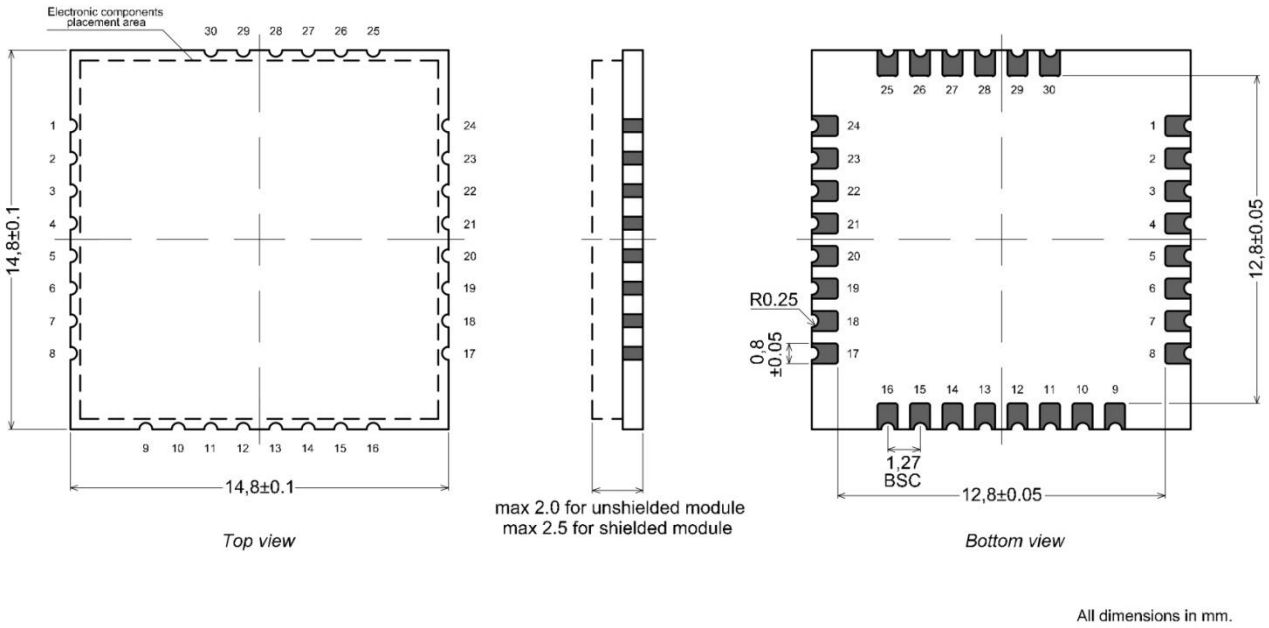

Figure 6: Physical dimensions

☞ The tolerances +/- 0.1 mm may be exceeded in the corners of the PCB due to the cutting process. In worst case, the outer dimensions could reach 15.1 mm.

5.1 Recommended footprint

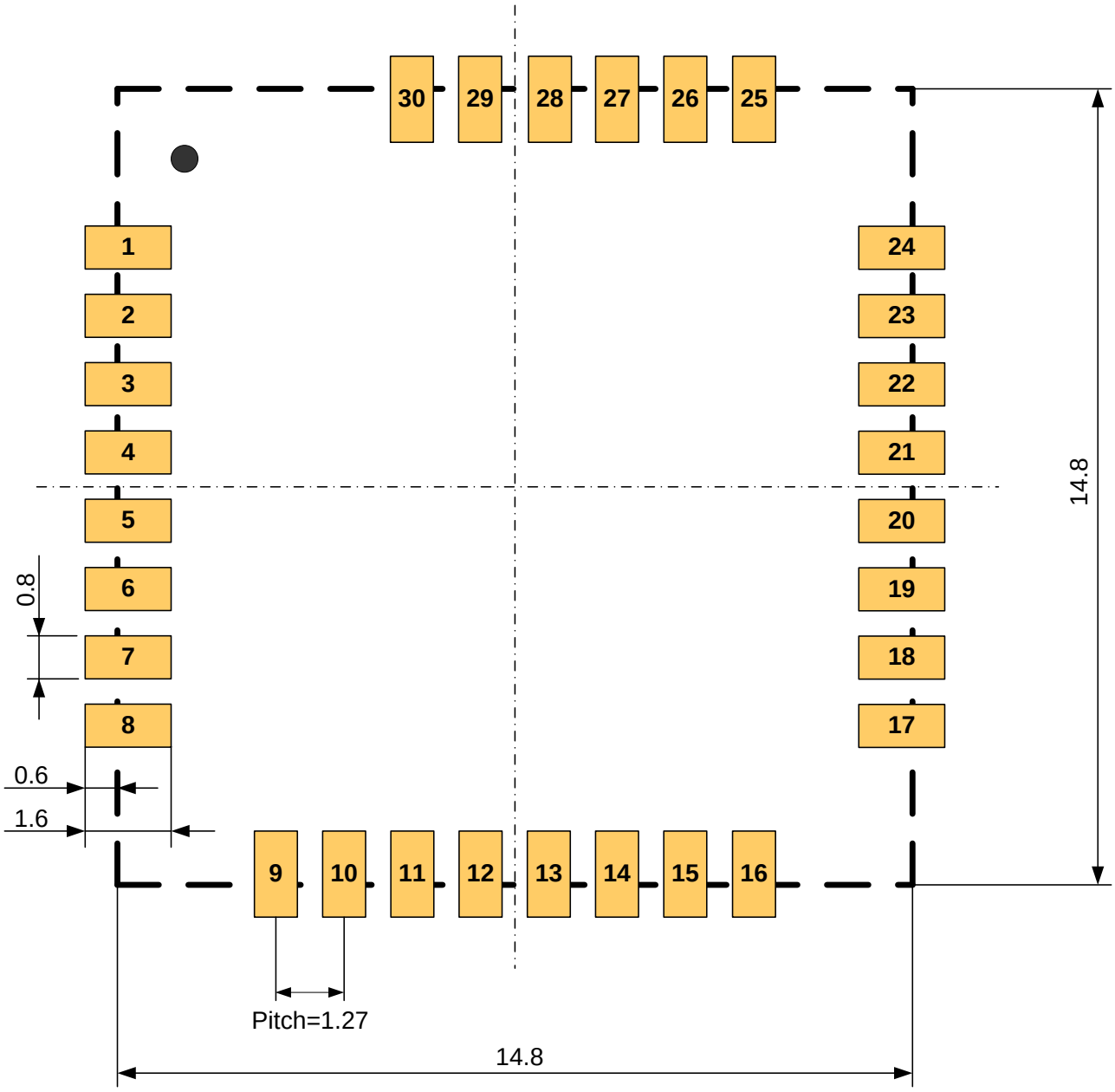

Figure 7: Recommended footprint (dimensions in mm)

6 Qualification and approvals

6.1 European Union regulatory compliance

Information about European Union regulatory compliance for the ELLA-W1 modules is available in the following documents:

- ELLA-W13 Declaration of Conformity [3]
- ELLA-W16 Declaration of Conformity [4]

6.1.1 Compliance with the RoHS directive

ELLA-W1 series modules are RoHS compliant (Directive of the European Parliament and the Council on the Restriction of Use of certain Hazardous Substances in Electrical and Electronic Equipment). See the ELLA-W1 declaration of conformity documents [3] [4] for further details.

6.1.2 Equipment classes

A multi-radio module is classified as class-1 or class-2 radio equipment depending on the frequency band in which it can operate. This equipment class is inherited by the end-product that integrates the module.

Class-1 radio equipment can be placed on the market and put into service without restrictions. (Article 1 of Commission Decision 2000/299/EC of April 6 2000)

This multi-radio module is defined as class-1 radio equipment when it is restricted to operate in the following frequency bands:

- Bluetooth, ISM band 2400 – 2483.5 MHz
- WLAN, ISM band 2400 – 2483.5 MHz
- WLAN, U-NII bands 5470 – 5725 MHz and 5725 – 5825 MHz

Class-2 radio equipment includes restrictions applied by Member States as indicated in Article 1(2) of the Commission Decision 2000/299/EC of April 6 2000. The class identifier as “information sign” or “alert sign”, required by the R&TTED, is not required by the RED and instead the manufacturer is required to provide information in accordance with Article 10.10 of the RED when restrictions on putting into service or of requirements for authorisation of use exist in one or more Member States.

If an end product allows the multiradio module to operate in the 5150-5350 MHz band (WLAN channel: 36-64), it is defined as class-2 radio equipment.

⚠ The usage of the ELLA-W1 series modules in a vehicular environment cannot be considered as “indoor” usage. The channels of the bands U-NII 1 and U-NII 2 are therefore not applicable.

The table below shows the restrictions when operating Wi-Fi at different bands within the European countries

Band	Channel number	Channel frequency [MHz]	Indoor use allowed	Outdoor use allowed	Radio Equipment Class	Max. EIRP
ISM	1 – 11	2412 – 2462	Yes	Yes	1	100 mW / 20 dBm
U-NII 1	36 – 48	5180 – 5240	Yes	No	2	200 mW / 23 dBm
U-NII 2	52 – 64	5260 – 5320	Yes	No	2	200 mW / 23 dBm
U-NII 2e	100 – 140	5500 – 5700	Yes	Yes	1	1 W / 30 dBm
U-NII 3	149 - 165	5750 - 5825	Yes	Yes	1	25 mW / 14 dBm

Table 20: Operating restrictions and radio equipment classification of ELLA-W1 series

⚠ Guidance on how the end product that utilizes this module is marked in accordance with the Radio Equipment Directive (RED) can be found at the webpage of the European commission.

IMPORTANT: The “CE” marking must be affixed to a visible location on the OEM product in which this module is installed and has to be labeled in accordance to RED 2014/53/EU.

6.2 FCC and IC compliance

6.2.1 FCC statement

This device complies with Part 15 of the FCC Rules. Operation is subject to the following two conditions:

1. This device may not cause harmful interference, and
2. This device must accept any interference received, including interference that may cause undesired operation.

Any changes or modifications not expressly approved by u-blox could void the user's authority to operate the equipment. The internal / external antenna(s) used for this module must provide a separation distance of at least 20 cm from all persons and must not be co-located or operating in conjunction with any other antenna or transmitter.

In accordance with 47 CFR § 15.19, the end product into which this module is integrated shall bear the following statement in a conspicuous location on the device:

> This device complies with Part 15 of the FCC Rules. Operation is subject to the following two conditions:
>
> 1. This device may not cause harmful interference, and
> 2. This device must accept any interference received, including interference that may cause undesired operation.

When the end-product is so small or for such use that it is not practical to place the above statement on it, the information shall be placed in a prominent location in the instruction manual or pamphlet supplied to the user or on the container in which the device is marketed. However, the FCC ID label must be displayed on the device.

If the end-product will be installed in locations where the end-user is not able to see the FCC ID and/or this statement, the FCC ID and the statement shall also be included in the end-product manual.

☞ The outside of final products containing the ELLA-W1 module must display in a user accessible area a label referring to the enclosed module. This exterior label can use wording such as the following[12]: “Contains Transmitter Module FCC ID: (XYZ)(UPN)” or “Contains FCC ID: (XYZ)(UPN)”, where (XYZ) represents the FCC “Grantee Code” and (UPN) is the Unique Product Number decided by the grant owner.

☞ The approval type for the ELLA-W1 series automotive grade variants is a limited modular approval due to the absence of a shielding. This requires any manufacturer of original equipment containing the ELLA-W1-A modules to ask for an approval of their design by the grantee.

6.2.2 IC compliance

This ELLA-W1 series module complies with Industry Canada license-exempt RSS standard(s). Operation is subject to the following two conditions:

(1) This device may not cause interference.
(2) This device must accept any interference, including interference that may cause undesired operation of the device.

[12] FCC and IC IDs for the ELLA-W1 module variants are shown in Table 21. Select the applicable ID.

☞ Any notification to the end user of installation or removal instructions about the integrated radio module is NOT allowed. Unauthorized modification could void authority to use this equipment.

This equipment complies with IC RSS-102 radiation exposure limits set forth for an uncontrolled environment. This equipment should be installed and operated with minimum distance 20 cm between the radiator and your body.

This radio transmitter IC: 7738A-WB11NSF1, 7738A-WB11NSF2, 7738A-WB11NDF1, 7738A-WB11NDF2 has been approved by Industry Canada to operate with the antenna types listed below with the maximum permissible gain indicated. Antenna types not included in this list, having a gain greater than the maximum gain indicated for that type, are strictly prohibited for use with this device.

☞ Operation in the band 5150–5250 MHz is only for indoor use to reduce the potential for harmful interference to co-channel mobile satellite systems;

☞ Operation in the 5600-5650 MHz band is not allowed in Canada. High-power radars are allocated as primary users (i.e. priority users) of the bands 5250-5350 MHz and 5650-5850 MHz and that these radars could cause interference and/or damage to LE-LAN devices.

The Industry Canada certification label of a module shall be clearly visible at all times when installed in the host device; otherwise, the host device must be labeled to display the Industry Canada certification number for the module, preceded by the words “Contains transmitter module”, or the word “Contains”, or similar wording expressing the same meaning, as follows: “Contains transmitter module IC: (CN)-(UPN)”, where (CN) is the Company Number registered at Industry Canada and (UPN) is the Unique Product Number decided by the grant owner.

6.2.3 Conformité aux normes d’IC

Le présent appareil est conforme aux CNR d'Industrie Canada applicables aux appareils radio exempts de licence. L'exploitation est autorisée aux deux conditions suivantes:

(1) l'appareil ne doit pas produire de brouillage, et

(2) l'utilisateur de l'appareil doit accepter tout brouillage radioélectrique subi, même si le brouillage est susceptible d'en compromettre le fonctionnement.

Cet équipement est conforme aux limites d'exposition de rayonnement d'IC RSS-102 déterminées pour un environnement non contrôlé. Cet équipement devrait être installé et actionné avec la distance minimum 20 cm entre le radiateur et votre corps.

Cet émetteur radio IC: 7738A-WB11NSF1, 7738A-WB11NSF2, 7738A-WB11NDF1, 7738A-WB11NDF2 été approuvé par Industry Canada pour fonctionner avec les types d’antenne énumérés ci-dessous avec le gain maximum autorisé et l’impédance nécessaire pour chaque type d’antenne indiqué. Les types d’antenne ne figurant pas dans cette liste et ayant un gain supérieur au gain maximum indiqué pour ce type-là sont strictement interdits d’utilisation avec cet appareil.

☞ Le dispositif de fonctionnement dans la bande 5150-5250 MHz est réservé à une utilisation en intérieur pour réduire le risque d'interférences nuisibles à la co-canal systèmes mobiles par satellite

☞ Opération dans la bande 5600-5650 MHz n'est pas autorisée au Canada. Haute puissance radars sont désignés comme utilisateurs principaux (c.-àutilisateurs prioritaires) des bandes 5250-5350 MHz et 5650-5850 MHz et que ces radars pourraient causer des interférences et / ou des dommages à dispositifs LAN-EL.

L'étiquette d'homologation d'Industrie Canada d'un module donné doit être posée sur l'appareil hôte à un endroit bien en vue en tout temps. En l'absence d'étiquette, l'appareil hôte doit porter une étiquette sur laquelle figure le numéro d'homologation du module d'Industrie Canada, précédé des mots « Contient un module d'émission », ou du mot « Contient », ou d'une formulation similaire allant dans le même sens et qui va comme suit : « Contient le module d'émission IC: (CN)-(UPN) », où (CN) représente le numéro de compagnie, attribué par Industrie Canada, et (UPN) représente le numéro de produit unique attribué par le requérant.

The internal / external antenna(s) used for this module must provide a separation distance of at least 20 cm from all persons and must not be co-located or operating in conjunction with any other antenna or transmitter.

☞ The approval type for the ELLA-W1 series automotive grade variants is a limited modular approval. Due to Industry Canada Modular Approval Requirements (Source: RSP-100 Issue 10), any application which includes the ELLA-W1 series module must be approved by the grantee.

6.2.4 FCC and IC IDs

Model[13]	FCC ID	IC ID
ELLA-W131	PV7-WIBEAR11N-SF1	7738A-WB11NSF1
ELLA-W133	PV7-WIBEAR11N-SF2	7738A-WB11NSF2
ELLA-W161	PV7-WIBEAR11N-DF1	7738A-WB11NDF1
ELLA-W163	PV7-WIBEAR11N-DF2	7738A-WB11NDF2

Table 21: FCC and IC IDs for different models of ELLA-W1 series

6.3 Japan radio equipment compliance

⚠ Only the automotive and professional grade product variants of ELLA-W131 are approved for integration into an end product in the Japanese market.

The ELLA-W131(-A) module complies with the Japanese Technical Regulation Conformity Certification of Specified Radio Equipment (ordinance of MPT N°. 37, 1981), Article 2, Paragraph 1:

- Item 19 "2.4 GHz band wide band low power data communication system"

☞ The ELLA-W131(-A) MIC certification number is 204-610005.

☞ When a product integrated with an ELLA-W131 module is placed on the Japanese market, it must have a label affixed on an exterior surface. The label must contain all the information presented in Figure 8. The English translation of the Japanese text displayed on Figure 9 is - "This equipment contains specified radio equipment that has been certified to the Technical Regulation Conformity Certification under the Radio Law." The marking must be visible for inspection.

[13] The FCC and IC IDs are the same for professional and automotive grade variants of each ELLA-W1 model.

204-610005

当該機器には電波法に基づく、技術基準適合証明等を受けた特定無線
設備を装着している。

Figure 8: Giteki mark, R, ELLA-W1 MIC certification number

The recommended size of the Giteki mark is Ø5.0 mm but the minimum size is Ø3.0 mm.
The end product holder should also include a copy of the Japan Radio Certificate to the end product technical documentation. To obtain a copy of the Radio Certificate, send an email to the support team email address for your area, as listed in the Contact section.

6.4 NCC Taiwan compliance

⚠ Only the professional grade product versions of ELLA-W131 and ELLA-W161 are NCC certified.

⚠ ELLA-W161 is not allowed to operate in Taiwan as a master device in the frequency range 5250–5725 MHz.

6.4.1 Taiwan NCC Warning Statement

- 經型式認證合格之低功率射頻電機，非經許可，公司、商號或使用者均不得擅自變更頻率、 加大功率或變更原設計之特性及功能。
- 低功率射頻電機之使用不得影響飛航安全及干擾合法通信；經發現有干擾現象時，應立即停用，並改善至無干擾時方得繼續使用。前項合法通信，指依電信法規定作業之無線電通信。低功率射頻電機須忍受合法通信或工業、科學及醫療用電波輻射性電機設備之干擾。

Statement translation:

- Without permission granted by the NCC, any company, enterprise, or user is not allowed to change frequency, enhance transmitting power or alter original characteristic as well as performance to a approved low power radio-frequency devices.
- The low power radio-frequency devices shall not influence aircraft security and interfere legal communications; If found, the user shall cease operating immediately until no interference is achieved. The said legal communications means radio communications is operated in compliance with the Telecommunications Act. The low power radio-frequency devices must be susceptible with the interference from legal communications or ISM radio wave radiated devices.

6.4.2 ELLA-W131 labeling requirements for end product

When a product integrated with an ELLA-W131 module is placed on the Taiwan market, the product must be affixed with a label marking as shown below. The label can use wording such as the following:

Contains Transmitter Module

內含發射器模組: CCAJ16LP2400T1

or any similar wording that expresses the same meaning. The marking must be visible for inspection.

6.4.3 ELLA-W161 labeling requirements for end product

When a product integrated with an ELLA-W161 module is placed on the Taiwan market, the product must be affixed with a label marking as shown below. The label can use wording such as the following:

Contains Transmitter Module

內含發射器模組:: CCAJ16LP2410T4

or any similar wording that expresses the same meaning. The marking must be visible for inspection.

6.5 Australia and New Zealand regulatory compliance

The ELLA-W131, ELLA-W131-A, ELLA-W161 and ELLA-W161-A modules are compliant with the standards made by the Australian Communications and Media Authority (ACMA).

The modules are compliant with AS/NZS 4268:2012 standard – Radio equipment and systems – Short range devices – Limits and methods of standard measurement.

For more information on Australia compliance, refer to the Australian Communications and Media Authority web site http://www.acma.gov.au/.

For more information on New Zealand compliance, refer to the New Zealand Radio Spectrum Management Group web site www.rsm.govt.nz.

6.6 Bluetooth qualification

The ELLA-W1 series is listed at the Bluetooth SIG (https://www.bluetooth.org/en-us) under QD ID 54755. The Product Type is "Controller Subsystem". Specification Name is "3.0+HS".
All four module variants are listed as product variants under the above mentioned QD ID.

⚠ The Bluetooth SIG has decided to withdraw the Bluetooth specification v3.0+HS on July 1, 2020. This means that from July 1, 2020 onwards, it is not possible to create new Bluetooth Declarations for end products based on that Bluetooth version (such as products using the ELLA-W1 series modules). End products with Bluetooth Declarations completed before July 1, 2020 are not affected, but after that date, it is not possible to make any changes to those Bluetooth Declarations. For more information see https://www.bluetooth.com/specifications/archived-specifications/

☞ The Bluetooth Declaration of the end product is mandatory for members of the Bluetooth SIG. It is mandatory to be a member of the Bluetooth SIG to be allowed to use the Bluetooth brand logo or brand name.

6.7 Approved antennas list

For each antenna listed in Table 22 and Table 23, the "Approvals" field defines the test reports in which the specific antenna is included. Definitions of the «Approvals» field are:

- FCC - The antenna is included in the FCC test reports and thus approved for use in countries that accept the FCC radio approvals, primarily US.

- IC - The antenna is included in the IC (Industrie Canada) test reports and thus approved for use in countries that accept the IC radio approvals, primarily Canada.
- RED - The antenna is included in the RED test reports and thus approved for use in countries that accept the RED radio approvals such as Australia, New Zealand, and primarily the European countries.
- MIC - The antenna is included in the Japanese government affiliated MIC test reports and thus approved for use in the Japanese market.
- NCC - The antenna is included in the Taiwan NCC test reports and thus approved for use in Taiwan.

For Bluetooth and Wi-Fi operation in the 2.4 GHz band, the module has been tested and approved for use with the antennas listed in Table 22.

Model name	Manufacturer and description	Gain [dBi] (peak)	Approvals
2450AT45A100	Johanson Technology, SMD chip antenna, 2.4 – 2.5 GHz	3.0	RED: ELLA-W131(-A) FCC, IC: ELLA-W131(-A), ELLA-W133(-A), ELLA-W161(-A), ELLA-W163(-A) MIC: ELLA-W131(-A)
ANT-2.4-CW-RCT-RP	Linx, dipole antenna, 2.390 – 2.510 GHz	2.2	FCC, IC: ELLA-W161(-A), ELLA-W131(-A) MIC: ELLA-W131(-A)
W5001, W5010, W5011	Pulse, dipole antenna, 2.4 – 2.5 GHz	1.5	MIC: ELLA-W131(-A)
GW.26.0151	Taoglas, dipole antenna, 2.4 – 2.5 GHz	1.8	MIC: ELLA-W131(-A)

Table 22: Approved antennas list, single-band operation

For Bluetooth and Wi-Fi operation in the 2.4 GHz band and Wi-Fi operation in the 5 GHz band, the module has been tested and approved for use with the antennas listed in Table 23.

Model name	Manufacturer and description	Gain [dBi] (peak)	Approvals
A10194	Antenova, dual-band SMD antenna, 2.4 – 2.5 GHz and 4.9 – 5.9 GHz	1.8 @ 2.4 GHz band 4.1 @ 5 GHz band	RED: ELLA-W161(-A) FCC, IC: ELLA-W161(-A), ELLA-W163(-A)[14]
ANT-DB1-RAF-RPS	Linx, dual-band dipole antenna, 2.400 – 2.483 GHz and 5.150 – 5.825 GHz	2.5 @ 2.4 GHz band 4.6 @ 5 GHz band	RED: ELLA-W161(-A) FCC, IC: ELLA-W161(-A) MIC: ELLA-W131(-A)
GW.40.2153	Taoglas, dual-band dipole antenna, 2.4 – 2.5 GHz and 5.150 – 5.850 GHz	3.74 @ 2.4 GHz band 2.5 @ 5 GHz band	FCC, IC: ELLA-W161(-A)
GW.59.3153	Taoglas, dual-band dipole antenna, 2.4 – 2.5 GHz and 5.150 – 5.850 GHz	2.37 @ 2.4 GHz band 2.93 @ 5 GHz band	FCC, IC: ELLA-W161(-A) MIC: ELLA-W131(-A)
GW.71.5153	Taoglas, dual-band dipole antenna, 2.4 – 2.5 GHz and 4.9 – 5.8 GHz	3.8 @ 2.4 GHz band 5.5 @ 5 GHz band	NCC: ELLA-W131, ELLA-W161

Table 23: Approved antennas list, dual-band operation

The module may be integrated with other antennas which the OEM installer must authorize with respective regulatory agencies and after approval of the module manufacturer.

[14] Antenna pad 1 only

7 Product handling

7.1 Packaging

The ELLA-W1 series modules are delivered as hermetically sealed, reeled tapes to enable efficient production, production lot set-up and tear-down. For more information about packaging, see the u-blox Package Information Guide [1].

7.1.1 Reels

The ELLA-W1 series modules are deliverable in quantities of 500 pieces on a reel. The ELLA-W1 series modules are shipped on reel Type A as specified in the u-blox Package Information Guide [1].

7.1.2 Tapes

Figure 9 shows the position and orientation of the ELLA-W1 modules as they are delivered on tape. The dimensions of the tapes are specified in Figure 10.

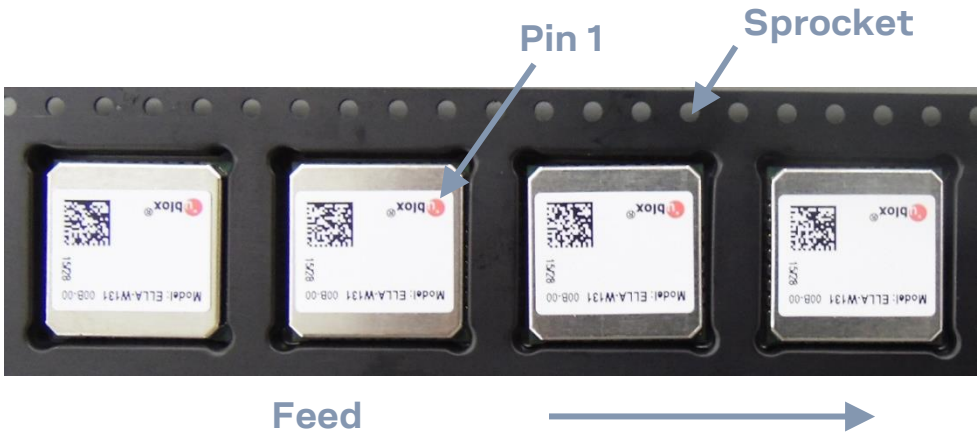

Figure 9: Orientation for ELLA-W1 modules on tape

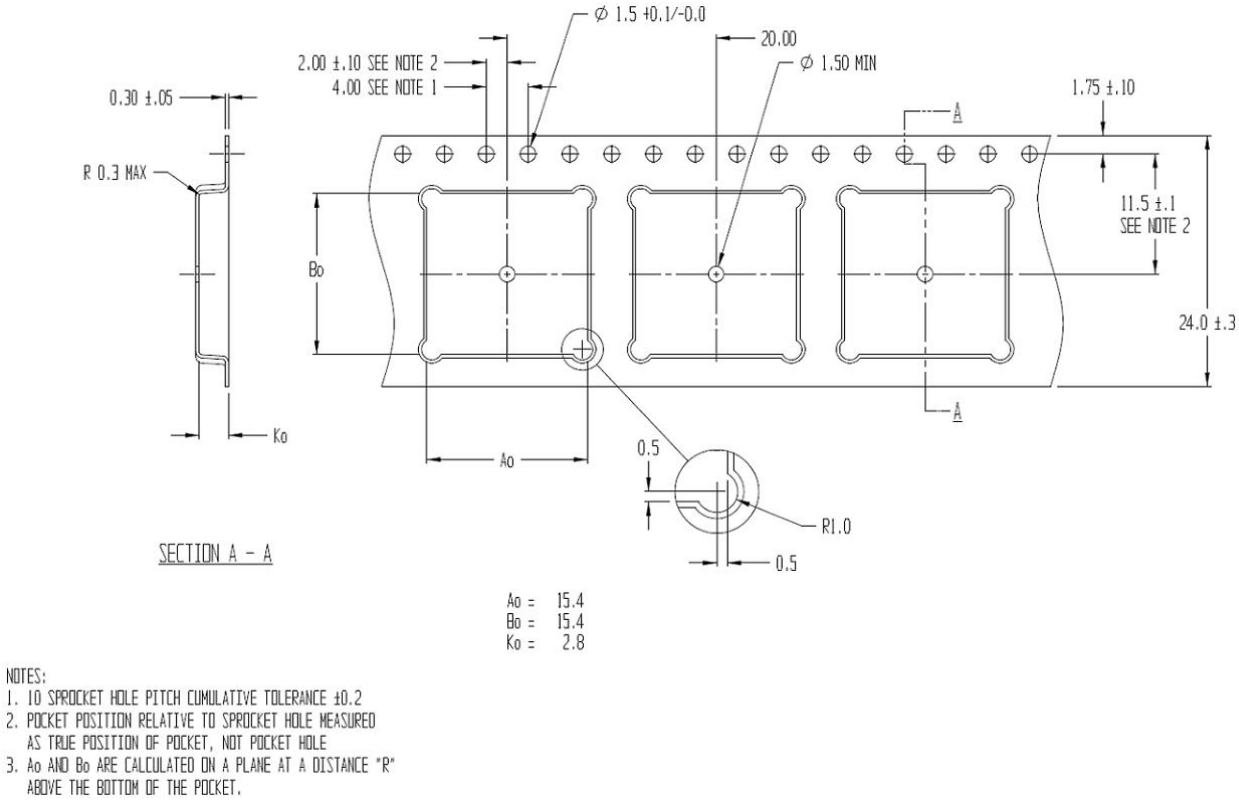

Figure 10: ELLA-W1 Tape dimensions

7.2 Shipment, storage and handling

For more information regarding shipment, storage and handling see the u-blox Package Information Guide [1].

7.2.1 Moisture sensitivity levels

The modules are rated at moisture sensitivity level 3. See moisture sensitive warning label on each shipping bag for detailed information. After opening the dry pack, the modules must be mounted within 168 hours in factory conditions of maximum 30 °C/60%RH or must be stored at less than 10%RH. The modules require baking if the humidity indicator card shows more than 10% when read at 23±5 °C or if the conditions mentioned above are not met. Refer to J-STD-033B standard for bake procedure.

7.3 Reflow soldering

Reflow profiles are to be selected according to u-blox recommendations in the ELLA-W1 System Integration Manual [2].

⚠ Failure to observe these recommendations can result in severe damage to the device!

7.4 ESD handling precautions

⚠ ELLA-W1 series modules are Electrostatic Sensitive Devices (ESD). Observe precautions for handling! Failure to observe these pecautions can result in severe damage to the module!

ELLA-W1 series modules are Electrostatic Sensitive Devices (ESD) and require special ESD precautions typically applied to ESD sensitive components. See the ELLA-W1 System Integration Manual [2].

⚠ Failure to observe these recommendations can result in severe damage to the device!

8 Labeling and ordering information

8.1 Product labeling

The labels of ELLA-W1 series include important product information as described in this section. The data matrix code for automotive and professional grade variants of ELLA-W1 series includes a serial number.

Figure 11 illustrates the label of automotive grade variant of ELLA-W1 series and includes: the u-blox logo, product name, type number, and data matrix code.

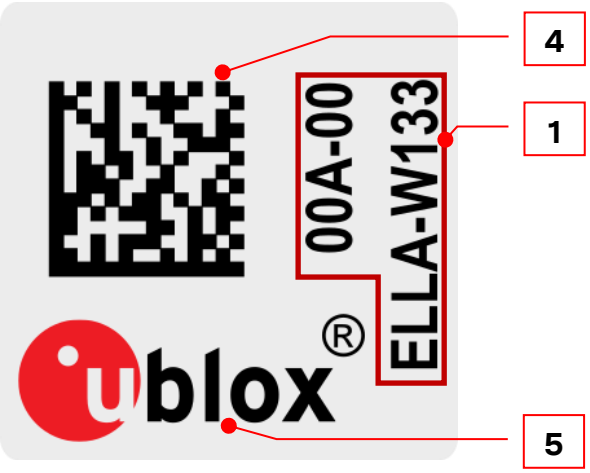

Figure 11: ELLA-W1 series – Automotive grade sample label

Figure 12 illustrates the label of professional grade variant of ELLA-W1 series and includes: the u-blox logo, product name (model), type number, FCC and IC certification numbers, GITEKI mark (certified product types only) and date of unit production encoded YY/WW (year/week).

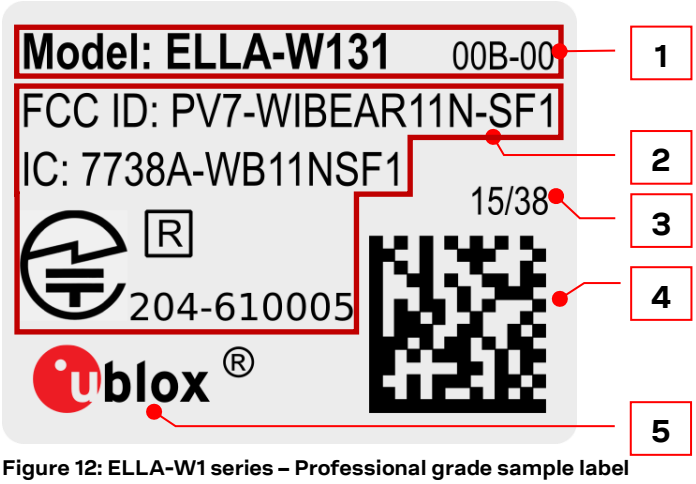

Figure 12: ELLA-W1 series – Professional grade sample label

A detailed description of the label components is provided in Table 24.

Reference	Description
1	Text box containing product name, version, and quality grade.
2	FCC and IC IDs of the module. Giteki marking and MIC certification number, if applicable.
3	Date of production encoded YY/WW (year/week).
4	Data Matrix with unique serial number of 19 alphanumeric symbols. The 3 first symbols represent the unique module type no: 622: ELLA-W131-00A-00 623: ELLA-W133-00A-00 624: ELLA-W161-00A-00 625: ELLA-W163-00A-00 626: ELLA-W133-00B-00 627: ELLA-W161-00B-00 628: ELLA-W163-00B-00 629: ELLA-W131-00B-00 The next 12 symbols represent the unique hexadecimal Bluetooth MAC address (see section 1.7 for more information about MAC addresses) of the module AABBCCDDEEFF, and the last 4 symbols represent the hardware and firmware version encoded HHFF.
5	u-blox logo, the red dot in the logo is also marking pin no 1.

Table 24: ELLA-W1 series label description

8.2 Explanation of codes

Three different product code formats are used. The **Product Name** is used in documentation such as this data sheet and identifies all u-blox products, independent of packaging and quality grade. The **Ordering Code** includes options and quality, while the **Type Number** includes the hardware and firmware versions. Table 25 below details these three different formats:

Format	Structure
Product Name	PPPP-TGVV
Ordering Code	PPPP-TGVV-TTQ
Type Number	PPPP-TGVV-TTQ-XX

Table 25: Product Code Formats

Table 26 explains the parts of the product code.

Code	Meaning	Example
PPPP	Form factor	ELLA
TG	Platform T – Dominant technology, For example, W: Wi-Fi, B: Bluetooth G - Generation	W1
VV	Variant based on the same platform; range [00…99]	31
TT	Major Product Version	00
Q	Quality grade A: Automotive B: Professional C: Standard	A
XX	Minor product version (not relevant for certification)	00

Table 26: Part identification code

8.3 Ordering codes

Ordering Code	Product name	Product
ELLA-W131-00B	ELLA-W131	ELLA-W131 professional grade module
ELLA-W131-00A	ELLA-W131-A	ELLA-W131 automotive grade module
ELLA-W133-00B	ELLA-W133	ELLA-W133 professional grade module
ELLA-W133-00A	ELLA-W133-A	ELLA-W133 automotive grade module
ELLA-W161-00B	ELLA-W161	ELLA-W161 professional grade module
ELLA-W161-00A	ELLA-W161-A	ELLA-W161 automotive grade module
ELLA-W163-00B	ELLA-W163	ELLA-W163 professional grade module
ELLA-W163-00A	ELLA-W163-A	ELLA-W163 automotive grade module
EVK-ELLA-W161-A	EVK-ELLA-W161	Evaluation kit for versions with 1 antenna pin (ELLA-W131, ELLA-W131-A, ELLA-W161 and ELLA-W161-A modules)
EVK-ELLA-W163-A	EVK-ELLA-W163	Evaluation kit for versions with 2 antenna pins (ELLA-W133, ELLA-W133-A, ELLA-W163 and ELLA-W163-A modules)

Table 27: Product ordering codes

☞ Product changes affecting form, fit or function are documented by u-blox. For a list of Product Change Notifications (PCNs) see our website. The IMDS number for ELLA-W1 series is 355902511.

Appendix

A Glossary

Abbreviation	Definition
AES	Advanced encryption standard
AP	Access point
BCA	Bluetooth coexistence arbiter
BDR	Basic data rate
BPF	Band-Pass Filter
CCMP	Counter-mode cipher block chaining message authentication code protocol
CMAC	Cipher-based message authentication code
dBm	Decibel-milliwatts
EDR	Enhanced data rate
EEPROM	Electrically erasable programmable read-only memory
EIRP	Effective isotropic radiated power
ESD	Electrostatic sensitive devices
GFSK	Gaussian frequency shift keying
HS	High speed
IMDS	International material data system
IMEI	International mobile equipment identity
LED	Light-emitting diode
MAC	Medium access control
MSL	Moisture sensitivity level
OEM	Original equipment manufacturer
PCB	Printed circuit board
PHY	Physical layer
QD ID	Qualified design ID
RF	Radio frequency
RoHS	Restriction of hazardous substances
RSS	Radio standards specification
SAR	Specific absorption rate
SDIO	Secure digital input output
SIG	Special interest group
SISO	Single in, single out
SMD	Surface-mount device
TKIP	Temporal key integrity protocol
VIO	Input offset voltage
WAPI	WLAN authentication and privacy infrastructure
WEP	Wired equivalent privacy
WLAN	Wireless local area network

Table 28: Explanation of the abbreviations and terms used

Related documents

[1] u-blox package information guide, doc. no. UBX-14001652
[2] ELLA-W1 system integration manual, doc. no. UBX-15017046
[3] ELLA-W13 declaration of conformity, doc. no. UBX-15012912
[4] ELLA-W16 declaration of conformity, doc. no. UBX-15012913

☞ For regular updates to u-blox documentation and to receive product change notifications, register on our homepage (www.u-blox.com).

Revision history

Revision	Date	Name	Comments
1.00	20-Jun-2012	ishe	Preliminary release.
1.02	16-Jul-2012	ishe	PCM interface description added. Supported channels in region independent form.
1.03	1-Oct-2012	ishe	Minor mistakes fixed. Evaluation Kit information added
1.04	5-Dec-2012	ddie	Updated order codes for latest hardware revision C
1.05	11-Jan-2013	ddie	Added installation and regulatory information
1.07	18-Jan-2013	ishe	Added label information and table with FCC/IC IDs. Added Wi-Fi Direct mode support
1.09	22-Jan-2013	ddie	Requirements (Note 2) for Sleep Mode updated. Added paragraph on IC compliance
1.11	22-Feb-2013	Ishe	Dimension drawing improved (tolerances added)
1.12	25-Feb-2013	ddie	FCC ID's and IC ID's with cross-reference to model numbers
1.13	28-Mar-2013	ddie	RoHS compliance; mounting process (warpage); custom tariff numbers; IMDS number
1.14	7-May-2013	ddie	Electrical specification updated: minimum supply voltage and ripple noise, digital pad ratings corrected. Physical dimensions: Contour tolerances in corners of the PCB added.
1.15	14-May-2013	ddie	Added order information for tape & reel packing
1.16	15-May-2013	ddie	Corrected ordering information for variants DF1 and SF2 (T&R)
1.18	19-Dec-2013	ddie	Approved antenna list extended
1.19	13-Mar-2014	ddie	Bluetooth QDID added, corrected several typos on page 3
1.20	10-Oct-2014	ddie	Approved antenna list extended
R01	3-Jun-2015	lalb, kfra, shoe	Document converted from lesswire WiBear 11n datasheet to u-blox ELLA-W1 datasheet and product name changed from WiBear 11n series to ELLA-W1 series. Professional grade variants added. FCC and IC ID's changed. Label contents changed. Delivery/shipment package and labels changed. Erroneous 2.6V for VIO Absolute Max Ratings removed.
R02	17-Jul-2015	lalb, mzes, kgom	Removed ANT-2.4-CW-RH and GW26.0151 from list of approved antennas. Added list of ELLA-W1 variants for each approved antenna. Added label specification for professional grade variant. Added notes that the approvals are pending. Changed reel type from reel type B to reel type A. Minor change in section 1.6. Updated the content in sections 4.4, 4.7.1, 6.1, 7.1.2, 7.2, and 7.3. Modified tables 2, 4, 8, and 22. Added sections 4.5 and 4.6. Included Figure 10.
R03	16-Oct-2015	lalb, ovik	Moved Reflow Soldering and ESD handling precautions sections and SDIO timing information to the ELLA-W1 System Integration Manual. Added relevant lesswire WiBear 11n revision history from before u-blox acquisition. Removed support for channel 14. Removed "Pending approvals" notification in section 1.1 and section 6.1.2. Added note stating IEEE 802.11k/r is not supported by the Marvell software in section 1.6 – Supported features. Modified the FCC and IC IDs for all the models in Table 21. Modified Figure 11 - Professional grade sample

Revision	Date	Name	Comments
			label to reflect the new FCC and IC ids. Modified the content in subsections 6.1.1, 6.1.2 and 6.1.3.
R04	25-Nov-2015	mzes, kgom	Included the image for automotive version (without RF shield box) on the title page. Minor change in section 1.1. Added "T" for ELLA-W131 in the Automotive grade column in Table 1. Included description for automotive grade modules also in section 1.5. In section 1.6, included footnote that IEEE 802.11k and r is not supported by the firmware currently. Changed the description of the automotive qualification tests in section Supported Features from VW 80000 / ISO 16750-4 to ISO 16750-4.
R05	18-Mar-2016	lalb, ishe	Document status changed to Production Information. Updated Table 14 and Table 19 to represent typical values for Wi-Fi and Bluetooth receiver sensitivity and Bluetooth transmit power.
R06	17-Oct-2016	mzes	Restructured chapter 6 - Qualification and approvals. Added certification for Japan in section 6.3, Taiwan in section 6.4 and Australia/New Zealand in section 6.5. Added certified antennas for Japan and Taiwan in Table 22 and Table 23. Added detailed label information in section 8.1. Removed the information in European Union regulatory compliance (section 6.1) and provided reference to the Declaration of Conformity for ELLA-W13 and ELLA-W16.
R07	14-Sep-2017	ddie, shoe, kgom	Added U-NII-3 frequency band in section 6.1. Included information about limited modular approval for automotive grade variants only in section 6.2. Updated section 6.1 with respect to Radio Equipment Directive (RED). Added a remark that indoor usage is not applicable in vehicular environments in section 6.1. Removed alert sign obligation information in section 6.1. Added EIRP to Table 20. Added information of approved antenna ANT-2.4-CW-RCT-RP for ELLA-W131 (-A) in Table 22. Replaced Document status with Disclosure restriction.
R08	30-Sept-2019	lalb	Added note about withdrawal of Bluetooth specification v3.0+HS (section 6.6).

Contact

For complete contact information, visit us at www.u-blox.com.

u-blox Offices

North, Central and South America

u-blox America, Inc.

Phone: +1 703 483 3180
E-mail: info_us@u-blox.com

Regional Office West Coast:

Phone: +1 408 573 3640
E-mail: info_us@u-blox.com

Technical Support:

Phone: +1 703 483 3185
E-mail: support@u-blox.com

Headquarters
Europe, Middle East, Africa

u-blox AG

Phone: +41 44 722 74 44
E-mail: info@u-blox.com
Support: support@u-blox.com

Asia, Australia, Pacific

u-blox Singapore Pte. Ltd.

Phone: +65 6734 3811
E-mail: info_ap@u-blox.com
Support: support_ap@u-blox.com

Regional Office Australia:

Phone: +61 2 8448 2016
E-mail: info_anz@u-blox.com
Support: support_ap@u-blox.com

Regional Office China (Beijing):

Phone: +86 10 68 133 545
E-mail: info_cn@u-blox.com
Support: support_cn@u-blox.com

Regional Office China (Chongqing):

Phone: +86 23 6815 1588
E-mail: info_cn@u-blox.com
Support: support_cn@u-blox.com

Regional Office China (Shanghai):

Phone: +86 21 6090 4832
E-mail: info_cn@u-blox.com
Support: support_cn@u-blox.com

Regional Office China (Shenzhen):

Phone: +86 755 8627 1083
E-mail: info_cn@u-blox.com
Support: support_cn@u-blox.com

Regional Office India:

Phone: +91 80 405 092 00
E-mail: info_in@u-blox.com
Support: support_in@u-blox.com

Regional Office Japan (Osaka):

Phone: +81 6 6941 3660
E-mail: info_jp@u-blox.com
Support: support_jp@u-blox.com

Regional Office Japan (Tokyo):

Phone: +81 3 5775 3850
E-mail: info_jp@u-blox.com
Support: support_jp@u-blox.com

Regional Office Korea:

Phone: +82 2 542 0861
E-mail: info_kr@u-blox.com
Support: support_kr@u-blox.com

Regional Office Taiwan:

Phone: +886 2 2657 1090
E-mail: info_tw@u-blox.com
Support: support_tw@u-blox.com