2inch Mobile thermal printer

User Manual

SynCrown Inc.

#704, E&C dream-tower 8th,

45 Gasan Digital 1st Rd.

GeumCheon, Seoul 153-793 Korea

TEL: +82-70-4814-0100

FAX: +82-2-6974-1533

Content

Precautions ····· 3
1. Safety Precautions ····· 3
2. Operation Precautions ····· 3
3. Storage Precautions ····· 4
4. Battery Safety Precautions ····· 4
Chapter 1 Brief Introduction ····· 6
1.1Appearance ····· 6
1.2 Accessories ····· 7
Chapter 2 Specifications ····· 8
Chapter 3 Operation Methods ····· 9
3.1 Preparation before using ····· 9
3.1.1 Li-ion battery installation ····· 9
3.1.2 Paper loading ····· 9
3.2 Basic Function ····· 10
3.2.1 Printer on ····· 10
3.2.2 Printer off ····· 10
3.2.3 Self-test ····· 10
3.2.4 Paper feeding ····· 10
3.2.5 Battery Charging ····· 10
3.3 Interface and printing ····· 11
3.3.1 Serial Interfaces ····· 11
3.3.2 Infrared ray (IR) & IrDA interface ····· 11
3.3.3 Bluetooth ····· 11
3.4 LED indicator and Buzzer definition ····· 12
3.5 The installation of printer driver ····· 13
Chapter 4 Other information ····· 14
4.1 Printer technical manual(control command) ····· 14
4.2 Preprinted black mark specification ····· 14

Precautions

1. Safety Precautions

- Be sure to use the specified battery and power source provided by our company. Connection to an improper power source may cause fire, explosion or damage to the printer.
- Don't put the battery into the fire or water, don't disassemble or modify the battery, don't be short circuit, otherwise may result in injury or fire even explosion.
- If the printer would not be used for a long time, be sure to take off the battery, otherwise the battery may leak liquid which is corrosive, if improper operation causes battery leak, and the liquid is spattered on the skin or clothes, please wash it with water, if spattered in the eyes, please rinse them with water thoroughly and see a doctor.
- Please do not open the paper case cover when it is printing or just when printing is over, do not touch the print head with hand or body, overheat may cause scald.

2. Operation Precautions

- Be sure not to print continuously over 1 meter, otherwise may cause damage to the print head.
- Water or other liquid should not spill into the printer, also the printer should not be appeared in the rain, or else may cause printer damage.
- Please do not open the paper case cover when it is printing, otherwise the printer may work improperly.
- If print with serial interface, should not unplug the interface cable in the course of printing, or else some printing data may be lost.
- When print in Ir or IrDA mode, be sure the Ir window of the host equipment face rightly the Ir window of the printer, the distance should be within the range of 50cm, and the angle should be within the range of 30°.
- When print with Bluetooth interface, the communication distance should be within 10 meters, otherwise the printer doesn't print or prints rubbish codes.
- Too high（50℃）or too low（-10℃） temperature and too high (85％)or too low (20％) relative humidity both effect the print quality.
- The print paper in poor quality or stored for too long time also may reduce the print quality even damage the printer.

- In the black mark detecting mode, the printer requires that the preprinted black mark is accordant with the black mark specifications (details please refer to 4.2), otherwise the black mark can not be detected correctly.
- Be sure to use up the power of the battery before charge it, as it can ensure the using life of the battery.

3. Storage Precautions

- The printer should be placed in such an environment that the temperature is between-20℃ and 70℃, and the relative humidity is between 5% and 95%.
- If the printer will be stored for a long time, please be sure to take out the battery, otherwise may damage the battery and printer.
- Normal thermal paper can't be kept too long, if you need to keep the receipt for a long period, please choose long term effective thermal paper.
- The print paper should be keep away from high temperature environment and point-blank sunshine.

4. Battery Safety Precautions

Be sure to carefully read the user manual before using the product.

Ignore the following instructions may cause battery overheating, fire, explosion, damage and / or performance, and reduced product life.

- Do not allow water, sea water from entering or leaking into the battery inside. If the batteries internal safety device burn, when charging it, it may produce any abnormal current and / or voltage, and cause any abnormal chemical reaction, then may cause the battery overheating, fire and / or explosion.
- Do not use or place the battery nearby the stove or other high temperature places. Excessive heat maybe damage the resin shell and / or the insulation materials, thereby cause short-circuit inside the battery, then the battery may be caused overheating, burning and / or explosion.
- When charging, use a specified charger. Other conditions (high temperature, high pressure / high current, using the modified battery charger, etc.) excluded here may result in over-charging the battery and abnormal current and / or voltage, cause abnormal chemical reaction, and may cause the battery overheat, light and / or explosion.
- Battery clearly marks with positive and negative. When connect the battery with the charger and / or printer, be sure to verify the correct battery orientation. Reverse insertion will cause the reverse charging and may cause abnormal

chemical reaction, and then may cause the battery overheat, ignite, and / or explosion.

- Do not make the battery contact with the power outlet and / or car cigarette lighter socket. This may cause high pressure and excessive current, and lead to the battery overheat, burning and / or explosion.
- Do not heat the battery or put the battery into fire. This may melt insulation material and/ or damage safety devices or safety equipment, then ignite electrolytic solution, and cause the battery overheat, burning and / or explosion.
- Do not use the battery with contrary (+) and (-) Location. In the charging process, this will cause the reverse charging and may cause abnormal chemical reaction. During use, may appear unpredictable current exception, and cause the battery overheat, ignite, and / or explosion.
- Do not make the battery (+) and (-) contact with any metal. Also, do not carry along or store batteries with metal objects, such as necklaces, hair clips and so on. Battery internal short circuit may cause excessive current, and lead to the battery overheat, ignite, and / or explosion and the adjacent metal objects (necklaces, hairpins, etc.) may be overheating.
- Do not throw or heavy attack the battery. If internal safety device of the batteries burn, the battery charging may cause any abnormal current and / or voltage, and abnormal chemical reaction, and lead to the battery overheat, ignite, and / or explosion.

Chapter 1 Brief Introduction

1.1Appearance

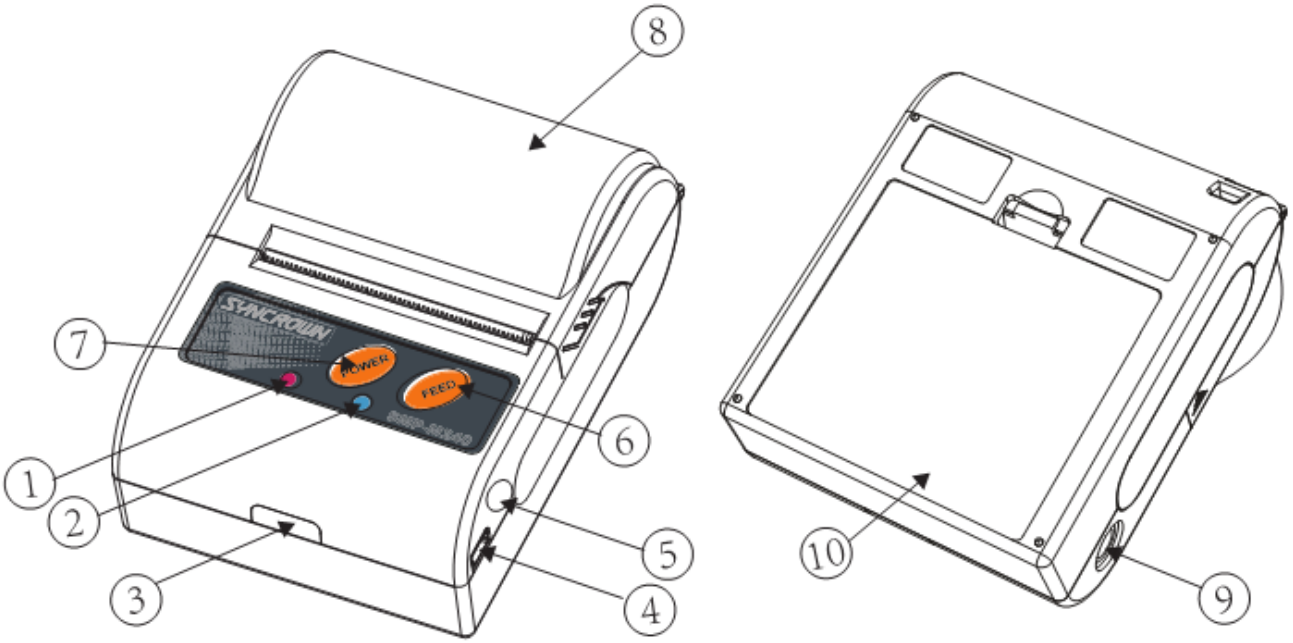

1.Power indicator(Red Light)
2.Status indicator(Blue Light)
3.Infrared ray (IR) interface
4.USB/RS232 interface
5.Power input
6.FEED button
7.Power on/off
8.Top cover
9.RS232 interface
10.Li-ion battery cover

1.2 Accessories

Standard accessories

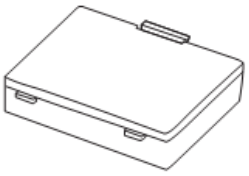

Li-ion battery

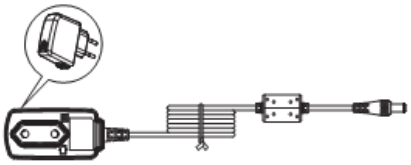

Power Adapter

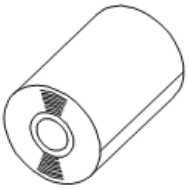

Paper

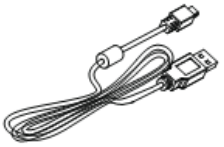

USB cable

Optional accessories

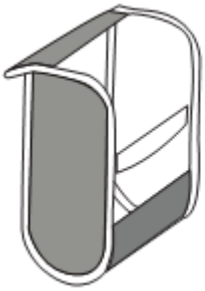

Leather case

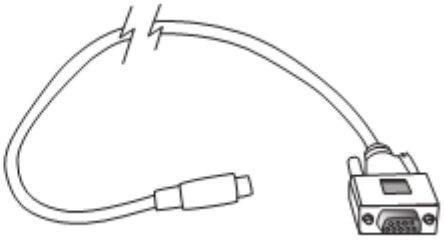

Serial interface cable

Chapter 2 Specifications

Item		Parameter
Printing	Printing method	Thermal line printing
	Resolution	203DPI, 8dots/mm
	Printing speed	50~70mm/s
	Valid printing width	48mm
	Interface	IrDA,Bluetooth,RS232,USB
Power saving	Sleep mode	YES
Character Set	Font	ASCII: 8×16 9×24 12×24;EUC:16×16;Multiple code pages support
Barcode Symbologies	1D	UPC-A, UPC-E, EAN8, EAN13, CODE39, ITF, CODEBAR, CODE128, CODE93
	2D	QR code
Graphics		Support bitmap printing with different density and user defined bitmap printing (Max. 40K for per bitmap, and Max. 76K for total)
Detection	Sensors	Paper out detection
LED indicator	Power indicator	Red
	Error indicator	Blue
Power supply	Power supply	12V/0.5A
	Battery	1500mAh 7.4V rechargeable Li-ion battery
Paper	Paper type	Thermal paper
	Paper width	58mm
	Paper thickness	≤0.12mm
	Paper roller diameter	≤40mm
	Paper loading	Easy loading mechanism
Physical characteristics	Working condition	-10°C~50°C , 25%~80%RH
	Storage condition	-40°C~70°C,≤93%RH（40°C）
	Dimension	102.5*75*45mm(for 40mm paper house)
	Weight	197g (without paper roll)
Optional kits		RS232 data cable or USB cable, leather case
Reliability	TPH	50km(not more than 12.5% printing density)/100 million pulses
Software	Emulation	ESC/POS
	Driver	Windows 2000/XP/Vista/7/8

Chapter 3 Operation Methods

3.1 Preparation before using

3.1.1 Li-ion battery installation

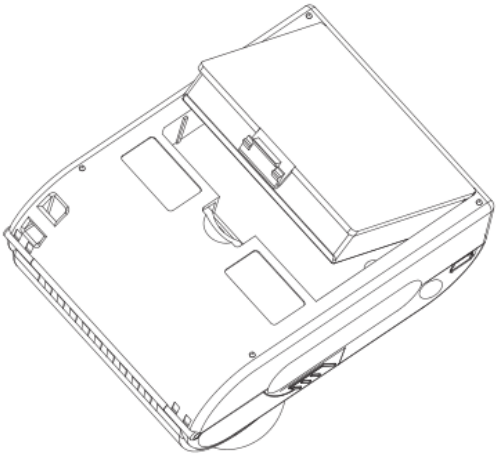

1) Refer to the picture, put the battery in the battery slot, please pay attention to the correct insert, (+) and (-).
2) Close the battery case.

3.1.2 Paper loading

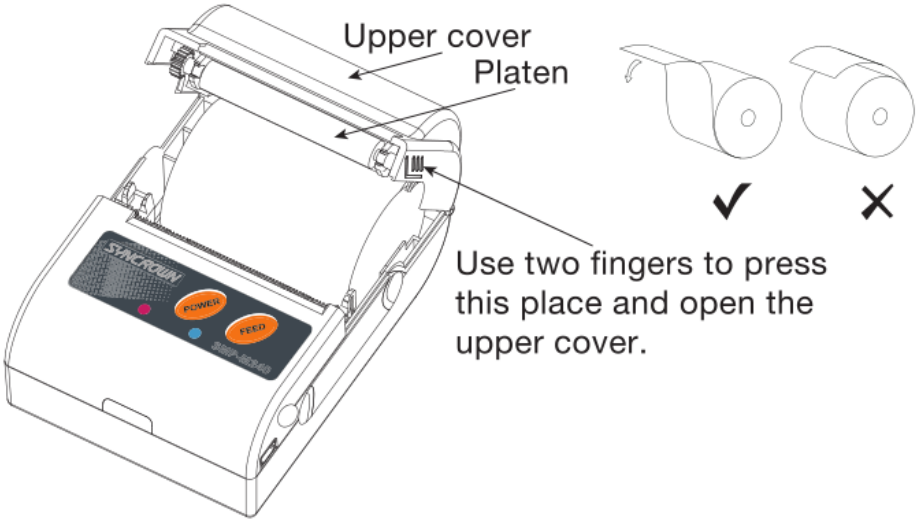

Operation methods:

1) Use two fingers to press the place showed in the picture and open the upper cover.
2) Put the paper into the paper case, pay attention to the direction of the paper. If loaded reversely, it won't print.
3) Pull paper out of paper case.
4) Make sure paper in the center then close upper cover.

3.2 Basic Function

3.2.1 Printer on

The printer is powered on by pressing the 【Power】 button for about 2 seconds; the power indicator is on with red color whenever the printer is on.

Notice: when the batter is almost exhausted, the power indicator blinks with blue color, in this case, you must charge the battery by using the adaptor. The method of charging the battery, please refer to 3.2.5.

3.2.2 Printer off

The printer is off after hold down the 【Power】 button for about 2 seconds. All the indicators are off whenever the printer is off.

3.2.3 Self-test

The self-test checks the printer's current settings, status and whether the printer has any problems. Hold down the 【FEED】 button while press 【Power】 button about 2 seconds, the self-test begins.

The printer is ready to receive data as soon as it completes the self-test.

3.2.4 Paper feeding

When printer works under non-black mark mode, user could use 【FEED】 button to feed paper manually. Printer will stop feeding when reaching max feeding distance. Max feeding distance could be set by the PC software "MPTTools", please refer to your distributor for more technical information of "MPTTools".

3.2.5 Battery Charging

When li-ion battery runs out of power, blue LED indicator flash slowly and buzzer will give out warning. It will power off automatically when continues printing. If you want to go on, please charge it.

Charging method: Plug in socket (220V,50Hz) with power adapter.

Power-off charging：LED light will always indicate blue color and goes off when fully charged.

Power-on charging： LED light will keep blinking in blue color, and stop blinking when fully changed.

When charging, printing is available.

3.3 Interface and printing

3.3.1 Serial Interfaces

This model of printer uses DB-9 serial interface cable (one end is D model standard serial interface socket, connected to host computer, the other end is PS/2 socket, connected to printer)

3.3.2 Infrared ray (IR) & IrDA interface

SMP-M240 can be connected to your main device through IR, RAW-IR and IrDA can not be available at the same time. Reset the printer if it is not the model you want.

When printing through RAW-IR and IrDA, make infrared ray of main device right towards to infrared ray window of printer, distance should be less than 50mm (varies with main device), angel should be less than 30° .

3.3.3 Bluetooth

PDA with Bluetooth interface, laptop and other information terminals can drive the mobile thermal printer SMP-M240. Instructions as follows:

1. Power on printer
2. Main device search for outer Bluetooth devices.
3. If there are some outer Bluetooth devices, choose “Syncrown”.
4. Enter password”0000”
5. Finish matching

In pairing, mobile thermal printer SMP-M240 must be turn on.

Note: when pairing, do not set many printers on, otherwise it can‘t figure out which one succeeds in pairing.

Having finished pairing, other main devices (main devices) still can pair with mobile thermal printer. The max main devices of each printer are 8. If more than 8, the earliest ones will be deleted from printer paring list automatically. If these earliest main devices want to drive printer to print and need pairing again.

After pairing, main devices with virtual Bluetooth interface （ smart phone , pocket PC, palm, notebook ） can drive mobile thermal printer SMP-M240 to printer through such virtual Bluetooth interface.

3.4 LED indicator and Buzzer definition

There are one buzzer and two LED indicators to indicate the printer status. LED indicators indicate current status and buzzer indicates the changes of status.

Status indicator（blue）	Power indicator (red）	Status
Flash quickly	OFF	Power-on charging
ON	OFF	Power-off charging
Flash slowly	OFF	Battery low
ON	OFF	Power-on charging , Battery full
OFF	OFF	Power-off charging , Battery full
OFF	ON	Power on
Flash slowly	Flash slowly	Paper end
OFF	Flash slowly	Standby

Buzzer	Status
Once	Power on
Twice	Power off
Once	Connect USB
Twice	USB disconnected
Once	Press 【FEED 】 button
Once	Connect to power adapter
Three times	Power-on charging ,Battery full
Three times	Enter to the parameter setting mode
Four times	Download the Font library
Twice	Battery low (the printer will shut down automatically after buzzing)

3.5 The installation of printer driver

1) Double click“SynCrownSMPMPrinterDriver-v-1.0.0.2.exe”， Click “Install ”.

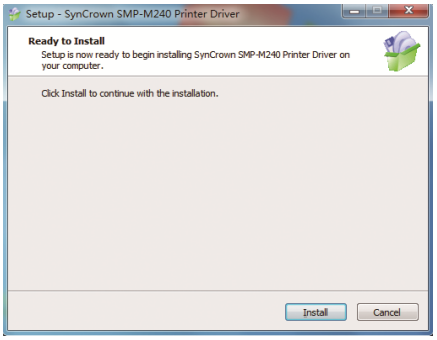

2) Choose the printer port and printer type you need and click “OK” to next step.

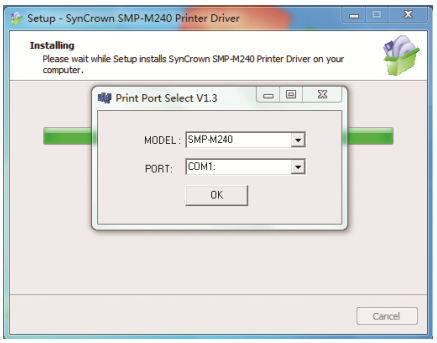

3) Click “Finish” . A successful installation

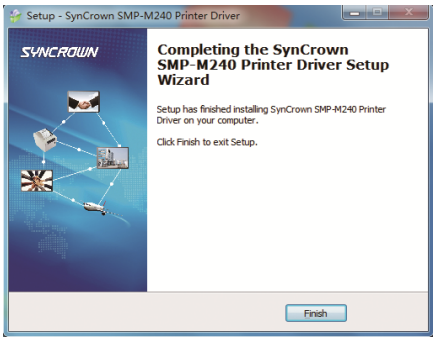

Chapter 4 Other information

4.1 Printer technical manual(control command)

Please refer to SMP-M240 technical manual.

4.2 Preprinted black mark specification

If user wants to locate receipt by detecting preprinted black mark, shall accord to the following specification for the black mark. Otherwise it may cause printer can't recognize the black mark.

Printing position: black mark shall preprint at the left side of receipt.

Width rang：≥7mm

Height：4mm≤height≤6mm

Reflection rate to IR：<10% （reflection rate to the black mark on paper >65% ）

Hps：Hps indicates the distance from down edge of detecting mark from beginning line(0mm≤Hps≤1mm)

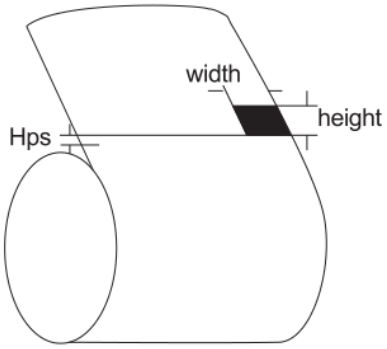

FCC Caution.

§ 15.19 Labelling requirements.
This device complies with part 15 of the FCC Rules. Operation is subject to the following two conditions: (1) This device may not cause harmful interference, and (2) this device must accept any interference received, including interference that may cause undesired operation.

§ 15.21 Information to user.
Any Changes or modifications not expressly approved by the party responsible for compliance could void the user's authority to operate the equipment.

§ 15.105 Information to the user.
Note: This equipment has been tested and found to comply with the limits for a Class B digital device, pursuant to part 15 of the FCC Rules. These limits are designed to provide reasonable protection against harmful interference in a residential installation. This equipment generates uses and can radiate radio frequency energy and, if not installed and used in accordance with the instructions, may cause harmful interference to radio communications. However, there is no guarantee that interference will not occur in a particular installation. If this equipment does cause harmful interference to radio or television reception, which can be determined by turning the equipment off and on, the user is encouraged to try to correct the interference by one or more of the following measures:
-Reorient or relocate the receiving antenna.
-Increase the separation between theequipment and receiver.
-Connect the equipment into an outlet on a circuit different from that to which the receiver is connected.
-Consult the dealer or an experienced radio/TV technician for help.

*RF warning for Mobile device:
This equipment complies with FCC radiation exposure limits set forth for an uncontrolled environment.
This equipment should be installed and operated with minimum distance 20cm between the radiator & your body.