HHC Changzhou Corp.
No. 61, Xinggang Road, Zhonglou District,
Changzhou, Jiangsu, China, 213023

WG01 Instruction

1. Product Overview

Product Name： Wireless Charger

Product Model No.： WG01

2. Environment requirement

Operation temperature: -10℃~ +45℃.

Storage temperature: －10℃~55℃.

Operating Humidity：10%~80%RH， non-condensing.

Storage Humidity：10%~ 85%RH， non-condensing.

3. Directions for Operation

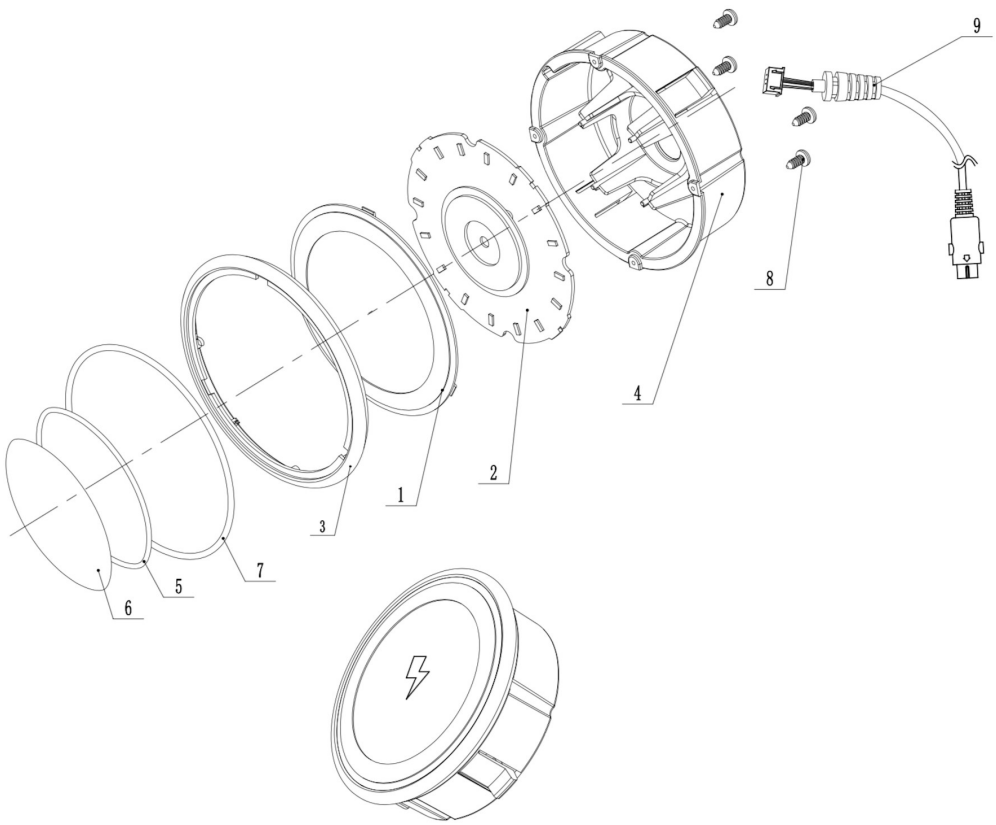

NO.	TYPE	NAME	PCS
9	ST2.5*4-F	Type F Screw	4
8	WG01-20000	Cable	1
7	WG01-00006	Big Ring Mat	1
6	WG01-00005	Round non-slip Mat	1
5	WG01-00004	Small Ring Mat	1
4	WG01-00002	Bottom Shell	1
3	WG01-00003	Panel Cover	1
2	WG01-10000	PCBA	1
1	WG01-00001	Top Shell	1

HHC Changzhou Corp.
No. 61, Xinggang Road, Zhonglou District,
Changzhou, Jiangsu, China, 213023

Install the MotoMotion APP

- Open APP Store on your iOS device
- Tap the Magnify Glass Icon and search with the keyword motomotion.
- Tap on GET and INSTALL to install the APP
- Wait for the download/installation to be complete.
- According to step 1,2,3,4, change the LED light color.

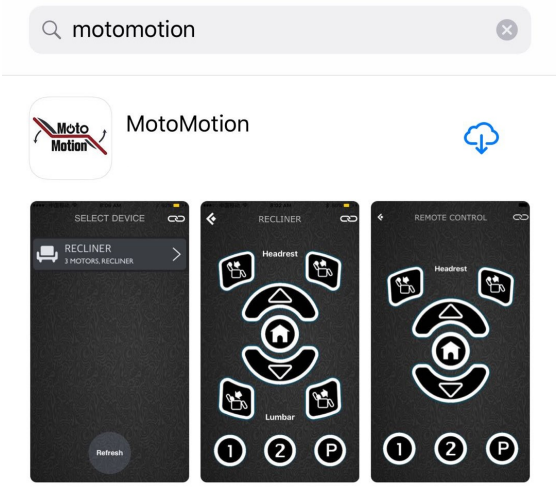

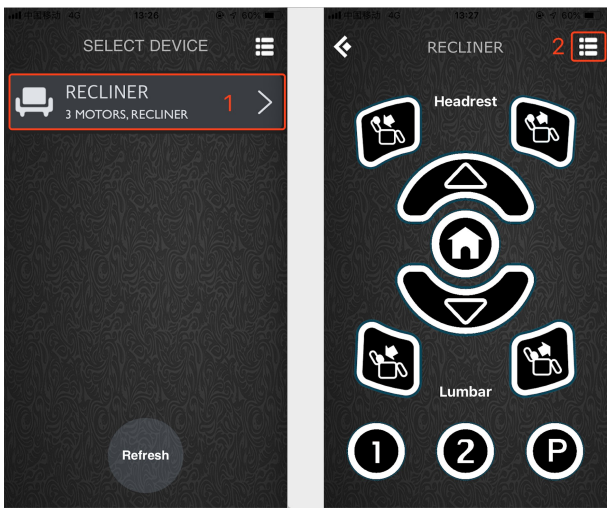

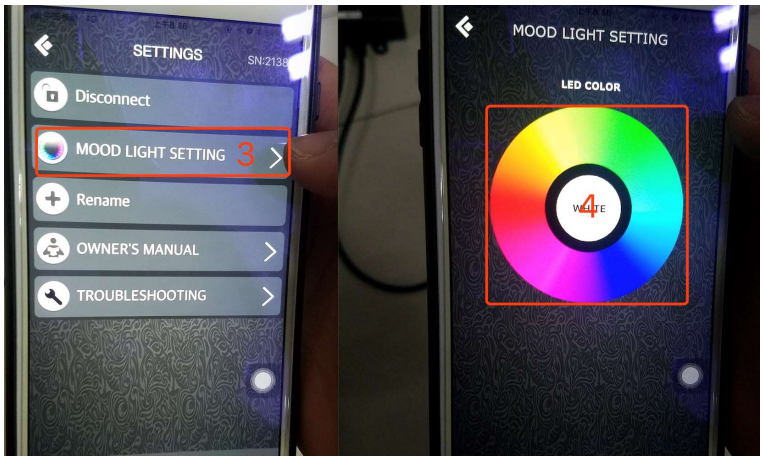

4. Matters needing attention:

4.1 The function will only work normally in proper working power conditions.

4.2 If problems are identified, they must be treated by professional personnel.

5. Additional attention for user：

FCC Statement

Any Changes or modifications not expressly approved by the party responsible for compliance could void the user's authority to operate the equipment.

This device complies with part 15 of the FCC Rules. Operation is subject to the following two conditions: (1) This device may not cause harmful interference, and

(2) This device must accept any interference received, including interference that may cause undesired operation.

FCC Radiation Exposure Statement:

This equipment complies with FCC radiation exposure limits set forth for an uncontrolled environment .This equipment should be installed and operated with minimum distance 20cm between the radiator& your body.

Note: This equipment has been tested and found to comply with the limits for a Class B digital device, pursuant to part 15 of the FCC Rules. These limits are designed to provide reasonable protection against harmful interference in a residential installation. This equipment generates, uses and can radiate radio frequency energy and, if not installed and used in accordance with the instructions, may cause harmful interference to radio communications. However, there is no guarantee that interference will not occur in a particular installation. If this equipment does cause harmful interference to radio or television reception, which can be determined by turning the equipment off and on, the user is encouraged to try to correct the interference by one or more of the following measures:

—Reorient or relocate the receiving antenna.

—Increase the separation between the equipment and receiver.

—Connect the equipment into an outlet on a circuit different from that to which the receiver is connected.

—Consult the dealer or an experienced radio/TV technician for help.