User Manual

i-CANVAS T

(82inch / IR Pen Type)

i-KAIST

Index

1. Summary

1-1. What is i-CANVAS T?

1-2. What is in the box?

1-3. Safety Precautions

2. How to Use i-CANVAS T

2-1. Physical Description

2-2. How to set i-CANVAS T

2-3. How to use Touch Pen

3. Customer Support

3-1. Trouble Shooting

3-2. Warranty

1. Summary

1-1. What is i-CANVAS T?

1-2. What is in the box?

1-3. Safety Precautions

i-KAIST

1-1. What is i-CANVAS T?

i-CANVAS T is interactive whiteboard using the technology for infrared camera sensor.

Feature |

- Good resistance to extraneous lights(Sunlight, Direct light, Visible light).
- Good adapt to the surrounding environment.
- Can use the IR pen through rechargeable without exchanging battery .
- Can use i-CANVAS T through the wireless dongle without obstruction effect.

Specifications |

Section	Item	Description
i-CANVAS T	Sensor	Infrared camera sensor
	Speed of response	Under 13ms
	Accuracy	Under ±5mm
	Active area	80"
	Communication	2.4GHz wireless (USB Dongle)
	Distance	Under 5M
	Power	DC 5V, 2A
	Size	1824(W) x 1222(H) x 26.3(D)
	Weight	23.5Kg
i-CANVAS PEN	Continuous use of time	32hours
	Charging time	3.5hours
	Power	Li-poly Battery
	Charging Port	Micro USB
i-CANVAS DONGLE	Communication	2.4Ghz wireless / USB 2.0 / HID
	Power	PC USB

1-2. What is in the box?

Recommend Specification |

Section	Description
OS	Windows7 / Windows8
RAM	Over 4GB
Space of Hard Disk	Over 300MB

Items |

Section	Contents		
Main items	ⓐ	Model/Version : iKC-T-82/Ver 1.0.0	1EA
	ⓑ	Touch Pen : i-CANVAS Pen	1EA
	ⓒ	USB Dongle : i-CANVAS Dongle	1EA
Accessory	ⓓ	USB Cable	1EA
	ⓔ	AC Adapter	1EA
	ⓕ	Manual	1EA

Image of contents

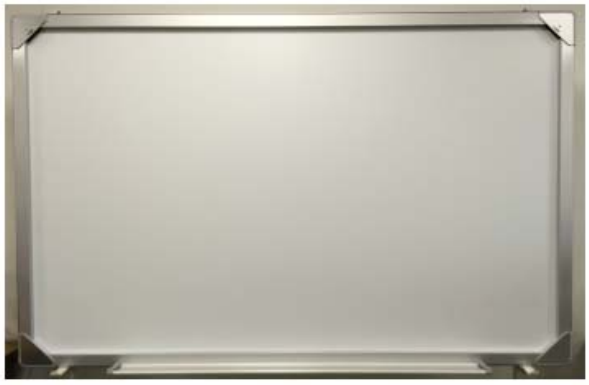

ⓐ i-CANVAS T (iKC-T-82)

ⓑ Touch Pen

ⓒ USB Dongle

ⓓ USB Cable

ⓔ AC Adapter

ⓕ Manual

1-3. Safety Precautions

Protect yourself and i-CANVAS T by observing the following precautions.

Do not plug the AC adapter into a faulty electrical outlet. Doing so may cause electrical shock or fire.

Do not touch the AC adapter with wet hands.

Only use the AC adapter provided with **i-CANVAS T**. Using another AC adapter may damage the device.

Do not use the **i-CANVAS T** in a moisture-rich environment such as a bathroom or shower. This is to prevent damage caused by moisture getting in to the device.

Do not attempt to disassemble or repair the **i-CANVAS T** yourself. Serious damage may occur to the device and the warranty will be voided.

The battery is consumable and its life may be reduced after 6 months of use.

Do not use **i-CANVAS T** under direct sunlight or in a very hot or cold environment. Do not use this device below 0°C or above 40°C.

Risk of explosion of battery is replace by an incorrect type.
Dispose of used batteries according to the instruction.

2. How to Use i-CANVAS T

2-1. Physical Description

2-2. How to set i-CANVAS T

2-3. How to use Touch Pen

i-KAIST

2-1. Physical Description

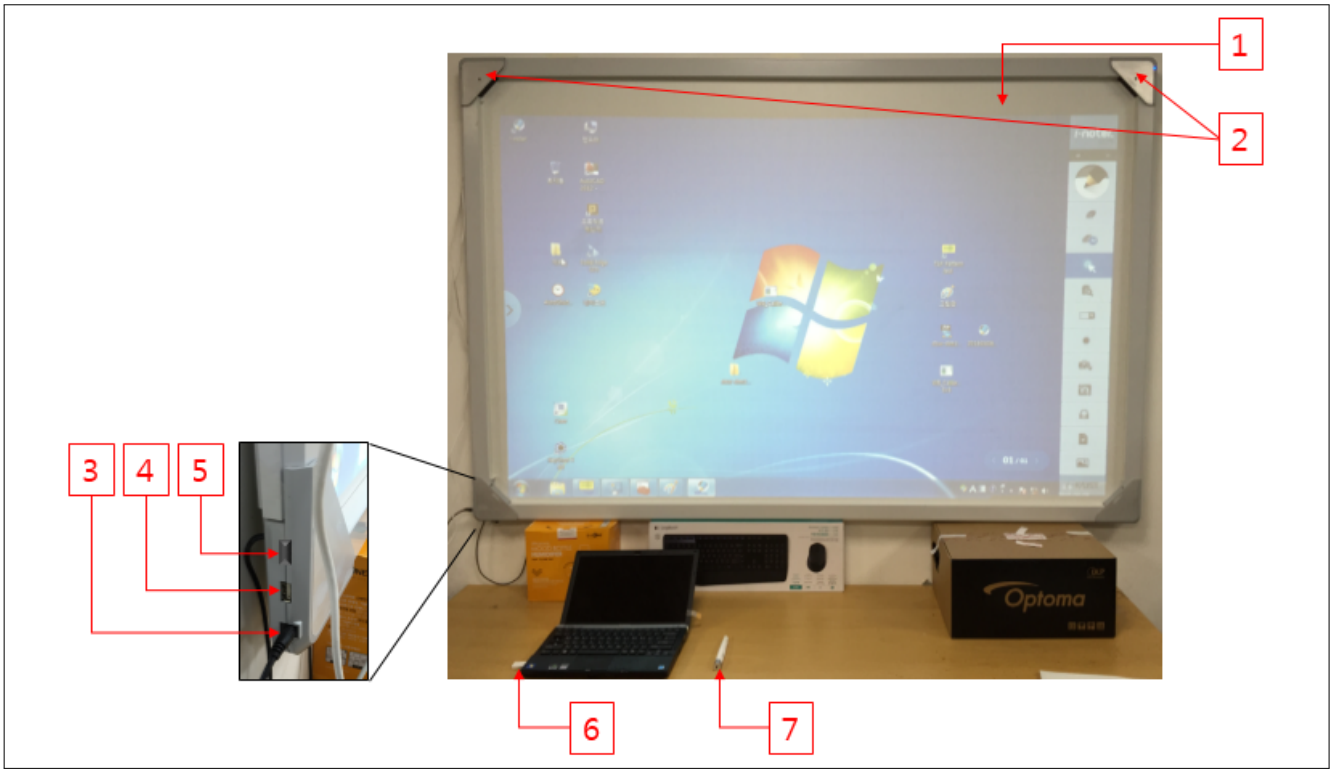

1	White Board	2	Touch Sensor In
3	DC Power In	4	USB Power Out
5	Power Switch	6	USB Dongle
7	IR Touch Pen		

i-KAIST

2-2. How to set i-CANVAS T

Proceed to levels of six following.

Level 1	**Connect the power plug and set the sensor** 1) Connect the DC plug. 2) Push the IR pen as shown in the picture right. 3) While the IR pen pushing, Push the button at the right sensor. 4) Similarly, push the button at the left sensor.
Level 2	**Set the size and location** 1) Set the display size and location of the projector as shown in the picture right.
Level 3	**Connect the USB dongle** 1) Connect the USB dongle to USB port of user PC. 2) Install the driver for touch. ※ The driver installation is automatically in Windows7, Windows8.x (Reference level4 - Check the driver installation.) **(i-CAVAS T ← i-CANVAS Dongle → [USB] PC)**

(Continue next page.)

i-KAIST

(Before : Level3 - Connect the USB dongle)

▼

Level 4	**Check the driver installation.** After the setting of i-CANVAS T is completed, connect the USB dongle to the PC. Therefore, the driver installation is automatically. Because sometimes the installation is occurred, check the driver installation. 1) Check the window of program to the [Picture 3-1]. 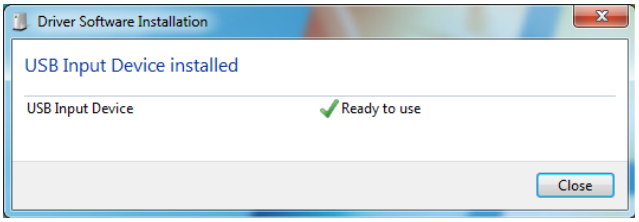 **[Picture 3-1] The installation window of "Touch" driver** 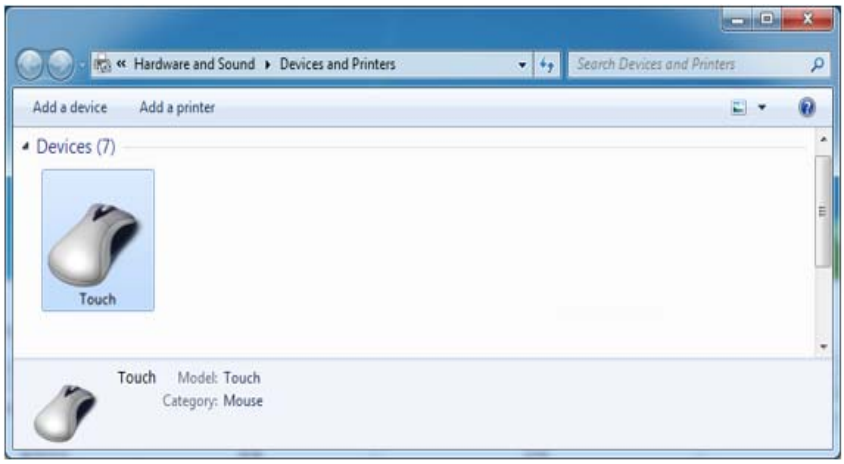 **[Picture 3-2] The icon of "Touch" device**

▼

(Continue next page.)

(Before : Level4 - Check the driver installation.)

▼

Level 5	**How to correct the coordinates.**

1) Run [Control panel] - [Tablet PC settings]

※ After driver installation be completed, the icon is appeared.

2) Select your display device, and clock the button of "Calibrate...".

※ if "Calibrate..." has already be applied, you must click the "Calibrate..." after click the "reset...".

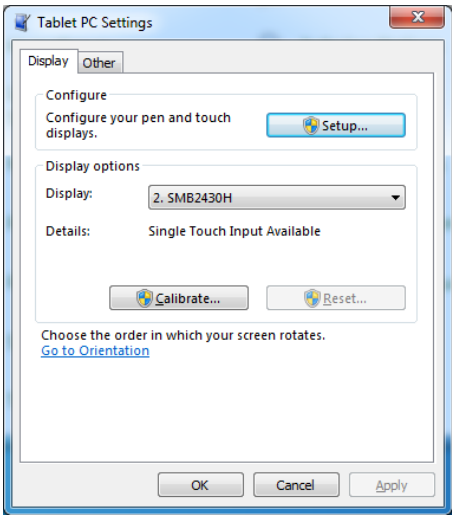

3) Make correction of coordinates according to the instruction.

※ If 16points are entered, the correction is completed.

▼

(Continue next page.)

i-KAIST

(Before : Level5 - How to correct the coordinates.)

▼

Level 6	**Completing the setting and test**
	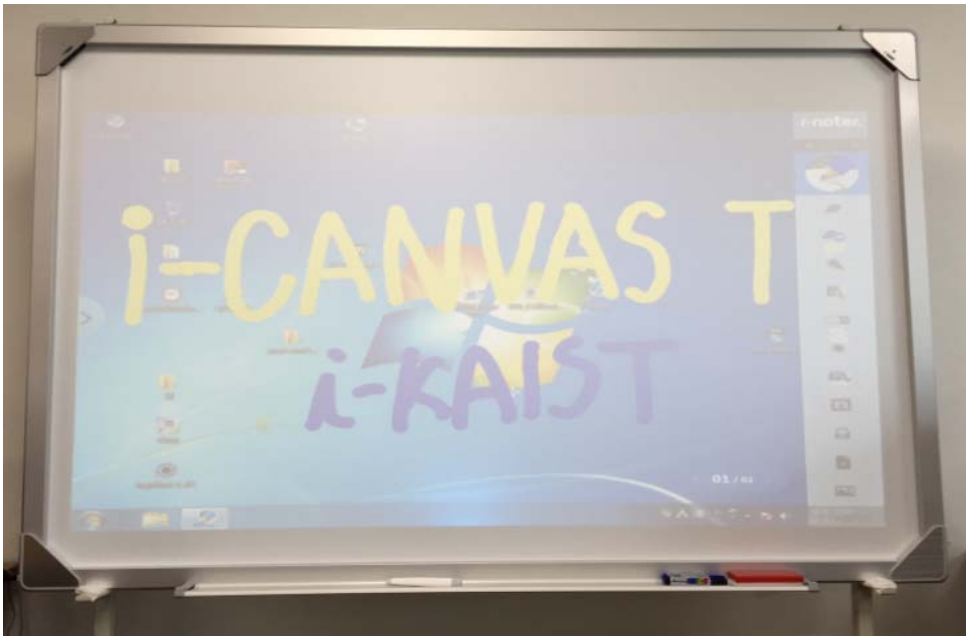 1) If settings are completed until the level5, check the operation in all areas.

i-KAIST

2-3. How to use Touch Pen

How to charging |

you can charging the IR pen through USB port of **i-CANVAS T** and USB cable.

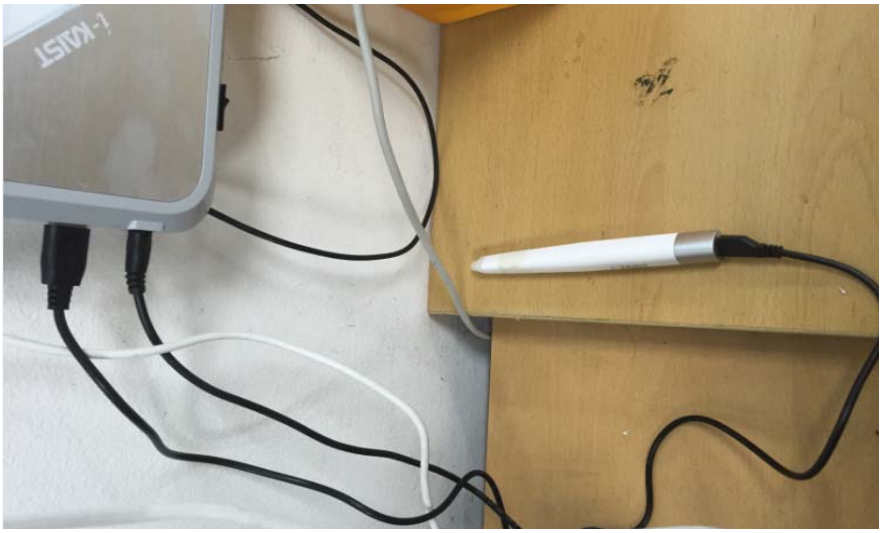

Alarm of charging |

Battery state	LED operation
Being charged	Red LED is operated.
Charging complete	LED isn't operated.
Charging needed	Red LED is operated when IR pen touched.
Normal	Blue LED is operate when IR pen touched.

3. Support

3-1. Trouble Shooting

3-2. Warranty

i-KAIST

3-1. Trouble Shooting

Problem	Check
While writing the IR pen, the line of letters is disconnected.	IR components that affect the touch sensor is exists around. - Eliminates the IR components.
Can't detect the USB dongle.	- Using other USB port. - If PC is the type if desktop, connect the USB port in front.
Can't recharging the IR pen.	- Check the USB cable is genuine. - If charging is good in other USB device (PC or USB adapter), call the A/S center.

3-2. Warranty

i-CANVAS T is eligible for free repair service for One years from the date of purchase to correct any manufacturer defects. Damage caused by the user, including damage caused by dropping the unit, placing heavy objects on the unit or damage caused by introducing liquid in to the unit, is not covered under the warranty and will be repaired at the cost of the user.

※Note: the warranty may differ by country.

i-KAIST

I-CANVAS T

Model No. IKC-T-82

Installation manual

VER 1.0

JUNE. 2015

i-KAIST

[Step 1] Assemble the bracket to the product

- Assemble the 4EA brackets to the hole on the back of the product as shown below picture.

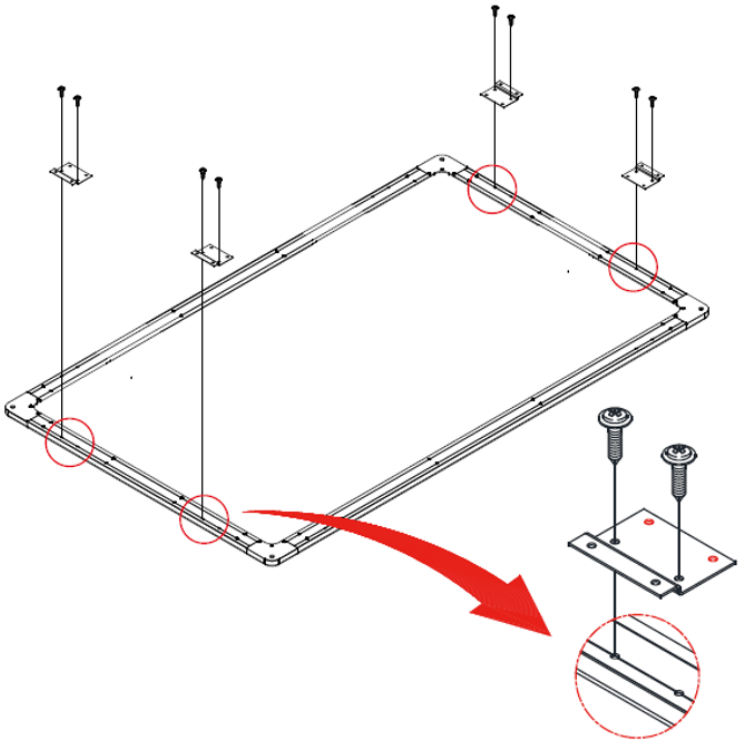

[Step 2] Fixed the product to the wall.

- Fixed the 4EA brackets to the wall as shown below picture.

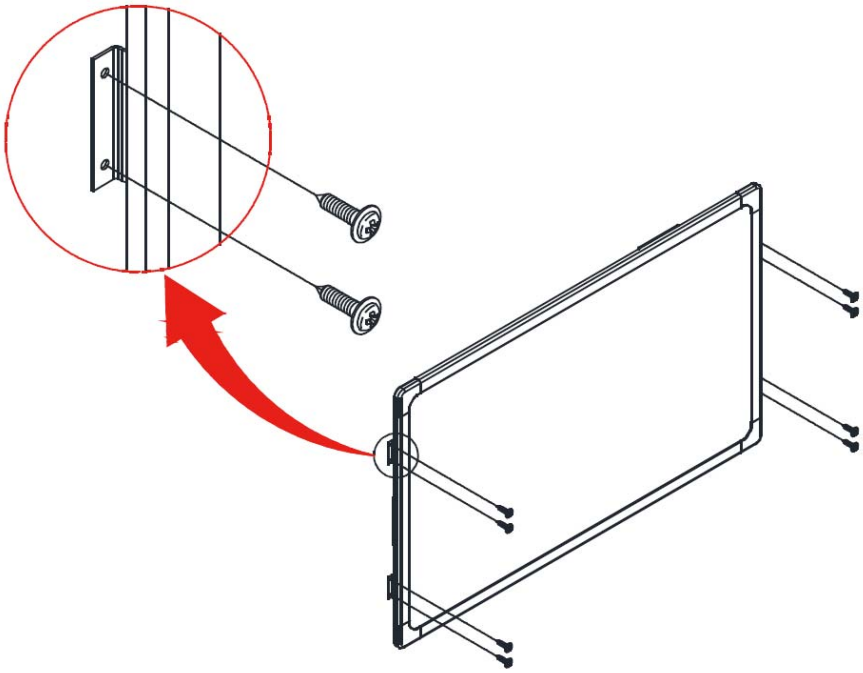

FCC Information to User

This equipment has been tested and found to comply with the limits for a Class B digital device, pursuant to Part 15 of the FCC Rules. These limits are designed to provide reasonable protection against harmful interference in a residential installation. This equipment generates, uses and can radiate radio frequency energy and, if not installed and used in accordance with the instructions, may cause harmful interference to radio communications. However, there is no guarantee that interference will not occur in a particular installation. If this equipment does cause harmful interference to radio or television reception, which can be determined by turning the equipment off and on, the user is encouraged to try to correct the interference by one of the following measures:

• Reorient or relocate the receiving antenna.

• Increase the separation between the equipment and receiver.

• Connect the equipment into an outlet on a circuit different from that to which the receiver is con-nected.

• Consult the dealer or an experienced radio/TV technician for help.

Caution

Modifications not expressly approved by the party responsible for compliance could void the user's authority to operate the equipment.

FCC Compliance Information : This device complies with Part 15 of the FCC Rules. Operation is subject to the following two conditions: (1) This device may not cause harmful interference, and (2) this device must accept any interference received, including interference that may cause undesired operation

IMPORTANT NOTE:

FCC RF Radiation Exposure Statement:

This equipment complies with FCC RF radiation exposure limits set forth for an uncontrolled environment. This equipment should be installed and operated with a minimum distance of 20 centimeters between the radiator and your body. This transmitter must not be co-located or operating in conjunction with any other antenna or transmitter.

CAUTION

To reduce the risk of electric shock, do not remove the top cover (or the rear section).
No user serviceable parts inside, refer servicing to qualified personnel.

This symbol, wherever it appears, alerts you to the presence of uninsulated dangerous voltage inside the enclosure-voltage that may be sufficient to constitute a risk of sock.

This symbol, wherever it appears, alerts you to the important operating and maintenance instructions in the accompanying literature. Please read the manual.

1) Read these instructions.

2) Keep these instructions.

3) Heed all warnings.

4) Follow all instructions.

5) Do not use this equipment near water.

6) Do not using near any heat sources such as radiators, heat resisters, stove, or other equipment that produce heat.

CAUTION
RISK OF EXPLOSION IF BATTERY IS REPLACED BY AN INCORRECT TYPE.
DISPOSE OF USED BATTERIES ACCORDING TO THE INSTRUCTIONS

European CE notice to users and product statements

This product is CE marked according to the provisions of the R&TTE Directive(99/5/EC). Hereby, i-KAIST declares that this product is in compliance with the essential requirements and other relevant provisions of Directive 1999/5/EC.

For further information, please contact http:// www. i-kaist.com

CE1177

i-KAIST
KAIST ICC Campus i-KAIST Building (Busok 1dong) 193 Munji-ro, Yuseong-gu, Daejeon-si, KOREA
Tel: 82-42-350-0847
Fax: 82-42-350-0848
Web: http:// www. i-kaist.com

CONTACT INFORMATION

Manufacturer Address : KAIST ICC Campus i-KAIST Building (Busok 1dong) 193 Munji-ro, Yuseong-gu, Daejeon-si, KOREA

To locate in-country I-KAIST, distributors of the I-CANVAS T please refer to the I-KAIST Website http:// www.i-kaist.com

These distributor(s) represent local contacts for this product.

CORPORATE HEADQUARTERS:

I-KAIST

KAIST ICC Campus i-KAIST Building (Busok 1dong) 193 Munji-ro, Yuseong-gu, Daejeon-si, KOREA

Tel: 82-42-350-0847

Fax: 82-42-350-0848

Web: http:// www.i-kaist.com

This device complies with Industry Canada license-exempt RSS standard(s).

Operation is Subject to the following two condition: (1) this device may not cause interference ,and (2) this device must accept any interference, including interference that may cause undesired operation of the device.

EUROPEAN UNION "DECLARATION OF CONFORMITY"

DECLARATION OF CONFORMITY

I-KAIST

KAIST ICC Campus i-KAIST Building (Busok 1dong) 193 Munji-ro, Yuseong-gu, Daejeon-si, KOREA

declare under our sole responsibility that the product(s)

I-CANVAS T – IKC-T-82

to which this declaration relate(s) is in conformance with the following standards:

EN 301 489-1 V1.9.2:2011
EN 301 489-17 V2.2.1:2012
EN 60950-1:2006/A2:2013
EN 300 328 V1.8.1:2012

following the provisions of the 1999/5/EC Directives.