User's Guide

3-in -1 HD Car/Sports Camera Recorder

with built-in Wi-Fi

Model: A07B Dashcam

Caution: Please charge unit completely with car charger and not USB for first charge. Doing so may cause battery damage

Table of Contents

Introduction 1
Features 1
Important 1
Restrictions 2
Disclaimer 3
Conditions 3
Contents 4
Product Basics 5
Getting Started 6
- Mounting The Camera 6
- Inserting the SD card 7
- Connecting the power cable 8
- Turning the camera on 9
- Light functions 9
- Use as Action camera 10

Basic Operations 11
- Set Date & Time 11
- Format SD Card 11
- Change to Default Settings 11

Buttons & Settings 12
- Buttons 12
  - UP / Zoom In 12
  - Menu / Return 12
  - Down / Zoom Out 12
  - Rec / OK 12
  - Playback 12
  - Mic / Lock 13
  - Power / Mode 13
- Settings 13
  - Car Mode settings 13
    - Resolution 14
    - Video Quality 14
    - Loop Recording 14
    - Exposure 14
    - Motion Detection 15
    - G-Sensor 15
    - Parking Mode 15
    - Date Stamp 15
  - Setup settings 16

Sound 16
LED Sensor 16
Auto Power Off 17
Screensaver 17
Date / Time 17
Flip Screen 17
Language 17
TV Mode 18
Frequency 18
TV Mode 18
White Balance 18
Wi-Fi Password 18
Format 19
Photo Mode settings 19
Resolution 19
Quality 19
Capture Mode 20
Burst Mode 20
Date Stamp 21
Sharpness 21
Exposure 21
Sports Mode settings 21
Resolution 22
Exposure 22
Video Quality 22
Anti-Shack 22
Date Stamp 22
Playback settings 23
Delete 23
Protect 23
Playing Back Videos 23
A07B Dashcam 23
Computer 24
Wi-Fi Control 25
Specifications 27

Introduction

The 3-in-1 **A07B Dashcam** is an easy-to-use high-definition (1080P Full HD) car cam recorder with a 1.5" LCD display and built-in Wi-Fi antenna. It records both audio and video with time & date stamp which can be used to pinpoint exactly when an event occurred. The events are recorded to a Micro SD card which can be used as evidence for auto insurance company if there are any legal complications during an insurance claim. The **A07B Dashcam** is perfect for all motorists and it is budget-friendly. One button switch to Car mode, photo mode and Sports mode ,makes it perfect device for your driving and entertainment, you can download the video to your smartphone via W-Fi, and share to your friends, no need to use Card reader and connect to your computer anymore.

Features

- HD video quality and real time recording (30fps/60fps)
- One button switch to Car Video / Photo / Sports Video mode.
- 20 meters waterproof (use waterproof case).
- Auto recording, video motion detection recording and manual recording (video or snapshot) modes
- Smart impact sensing recording (non-over writable video) and locks up current and post impact sensing video clips
- Records up to 474/237 total minutes (at 720P/1080FHD) on a 32GB micro SD (not included)
- Auto overwrite when SD is full (for regular recording in Car Mode)
- Built-in microphone and speaker
- 170 degree wide angle lens
- Records 1-min, 3-min or 5-min of continuous video clips
- Built-in rechargeable battery for up 90-mins of usage (recording without Wi-Fi on)
- Download free Wi-Fi viewer app for live preview, playback, archive, setup and sharing.

Important

This guide provides important information on the use and operation of your A07B Dashcam and the images/features shown throughout the manual are subject to change without notice due to system and firmware upgrades. Please read all the information carefully prior to using the product for the best performance and to prevent any damage/injuries or misuse of the device(s). Customers are entitled to have read through this complete user's manual before using the A07B Dashcam. Any unapproved changes or modifications will void your warranty. Please ensure to have a complete understanding of the following restrictions.

NOTE: Please check the state laws and regulations to determine if windshield mounting is legal in your Country and state.

Restrictions

When using this product, the safety precautions below must be taken to avoid possible legal liabilities and damages. Retain and follow all product safety and operating instructions. Observe all warnings in the product operating instructions. To reduce the risk of bodily injury, electric shock, fire and damage to the equipment, observe the following precautions.

PLEASE NOTE that under certain circumstances, audio/video recording may be PROHIBITED by law.

- DO NOT use this product near water, for example, near a bathtub, washbowl, kitchen sink, or laundry tub, in a wet basement, or near a swimming pool .

- DO NOT place this product on an unstable cart, stand, or table. The product may fall, causing serious damage to the product.

- DO NOT disassemble this product. Opening or removing covers may expose you to dangerous voltages or other risks. Incorrect reassembly can cause electric shock during subsequent use.

- DO NOT use this product to infringe on one's privacy, spying intercepting and related activities are illegal and punishable by law. Monitoring one's private activities without consent is illegal and this product is not designed or manufactured for these purposes.

- DO NOT use this product to carry out any illegal activities such as sneak preview, etc.
  The Seller and Manufacturer of the product shall not be responsible for any consequences of illegal conducts made by users.

- DO NOT put the plastic packaging bags in reach of children or babies. Plastic bags can create a suffocation hazard when placed over the nose and mouth.

- DO NOT plug the AC adapter into the outlet in improper situations.
  - Plugging in an AC adapter with wet hands might cause electric shock.
  - Plugging in the AC adapter unsteadily might cause fire or electric shock.

- DO NOT cover the AC adapter when it is connected to an outlet, place the adapter near heaters, or put it on the floor which is equipped with a heater. The above mentioned operation might cause fire or incidents.

Disclaimers

- Please make sure that you are following the regulations and laws set by your Country and State DMV(Department of Motor Vehicles) prior to mounting your camera. This manual does not intent to provide any specific legal advice.
- Please check the A07B Dashcam‘s features periodically to ensure that it is operating as required.
- During a car accident, the impact of the collision must be hard enough to trigger the G-Sensor In order for the A07B Dashcam’s to begin recording (G-Sensor sets to be off in Sports Mode).
- Please use the A07B Dashcam as a tool while driving and use driver’s safety while driving.
- The Seller and Manufacturer of A07B Dashcam shall not be held responsible for any traffic violations related to the positioning or improper use of our product.
- Avoid mounting the camera outside of an airbag deployment zone.
- Knowing most vehicles runs off 12VDC power supply from the battery, please double check our cigarette power adapter’s output rating before attempting to run power directly from the car battery.

Conditions

Please read the following messages to make sure your working environment is suitable.

- If your vehicle does not cut off power to your cigarette lighter port, then you may have to manually turn off or unplug the charger to prevent it from overheating.
- The temperature should be kept between –10˚C and 50˚C (14˚F to 122˚F). The relative humidity should be kept between 20% and 80%.
- Avoid putting the product in places where temperature or humidity may change rapidly.
- Keep it dry, dustless and avoid lens exposure in direct sunlight.
- Keep product away from heat sources such as electric heaters.
- Do not use the camera near harmful chemicals.
- Do not place product near any strong magnetic objects
- It might influence the normal operation of the product if used at the fringe range of normal temperature. Please turn off the power when not in use.
- Do not disassemble the product.
- Do not shake or strike the product.
- Please obey the local government’s environment protection policy.

Package Contents

1 x CarCam A07B

1 x Suction Cup

1 x Car Charger

1 x USB cable

Micro SD card
not included ,
(Supports up to 32GB)

User’s Manual

Waterproof case

1 x Bicycle Stand

Mount adaptor

Bandage

2 x Helmet Base &Wire Rope
2 x 3M Adhesive Tape

Helmet Mount

Product Basics

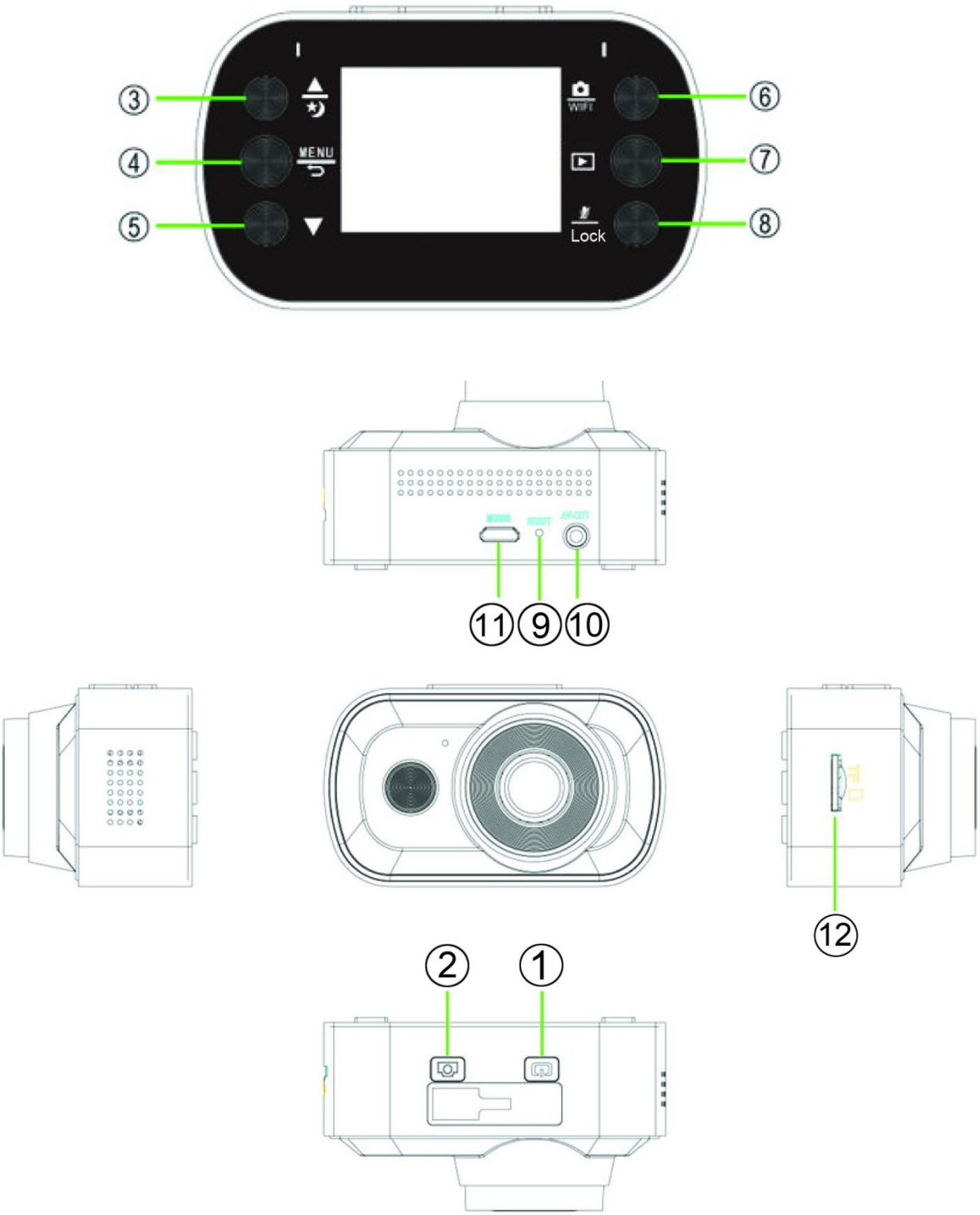

01. ON / OFF / Mode switch
02. REC / OK / Wi-Fi
03. Up (Zoom in) / IR Light
04. Menu / Back
05. Down (Zoom out)
06. REC / OK / Wi-Fi
07. Playback
08. Microphone / Video Lock
09. Reset
10. AV Out
11. Power
12. Micro SD card slot

Quick Start

MOUNTING THE CAMERA

Please make sure that you are following the regulations and laws set by your Country or states DMV (Department of Motor Vehicles) prior to mounting your camera. This will avoid any accidents and traffic violations that can occur if the camera is mounted in a location that is prohibited by law.

NOTE: The Seller or Manufacturer of **A07B Dashcam** shall not be held responsible for any traffic violations related to the positioning or improper use of our product.

Determine where you will be mounting the camera. The following diagram depicts mounting locations on a vehicle based in the state of California (U.S.) and its restrictions.

NOTE: According to CA VC Section 26708 (13) (A) "A video event recorder with the capability of monitoring driver performance to improve driver safety, which may be mounted in **a seven-inch square** in the lower corner of the windshield farthest removed from the driver, in a **five-inch square** in the lower corner of the windshield nearest to the driver and outside of an airbag deployment zone, or in a **five-inch square** mounted to the center uppermost portion of the interior of the windshield. As used in this section, "video event recorder" means a video recorder that continuously records in a digital loop, recording audio, video, and G-force levels, but saves video only when triggered by an unusual motion or crash or when operated by the driver to monitor driver performance."

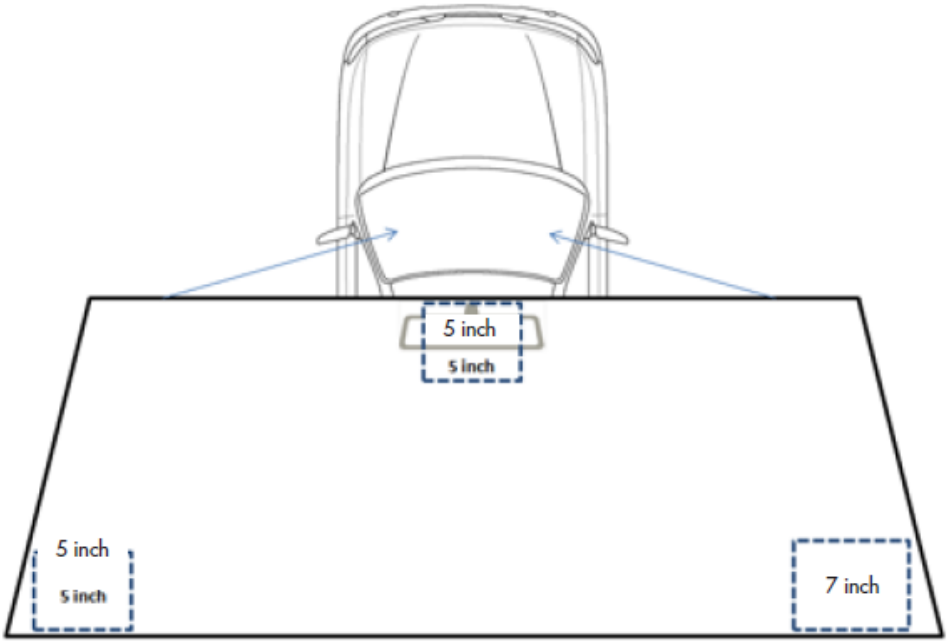

INTERIOR VIEW OF THE WINDSHIELD
(Based on California's vehicle code restriction & requirement)

2. Using the suction cup and rotating bracket, mount the **A07B Dashcam** to the inside of your vehicles windshield (use the adjustment knob to loosen and tighten the **A07B Dashcam** as needed).

NOTE: The A07B Dashcam can also be used to record both exterior and interior (front and rear) of your vehicle. For interior recording, simply follow the steps above and rotate the camera so that the lens is facing the inside of your vehicle.

INSERT THE SD CARD

Insert your micro SD card into the A07B Dashcam's micro SD slot. Make sure that you insert the in the correct direction as shown. The SD card will make a clicking sound, indicating it has been locked into the Carcam.

CONNECT THE POWER CABLE

1. Connect the car chargers cable into the **A07B Dashcam**'s power socket located on the bottom side of the Carcam.

NOTE: Use the brackets adjustment knob to make adjustments as needed.

2. Depending on where you've chosen to mount the **A07B Dashcam,** run the power cable around the trim of your vehicle so that it will not obstruct your view while driving.

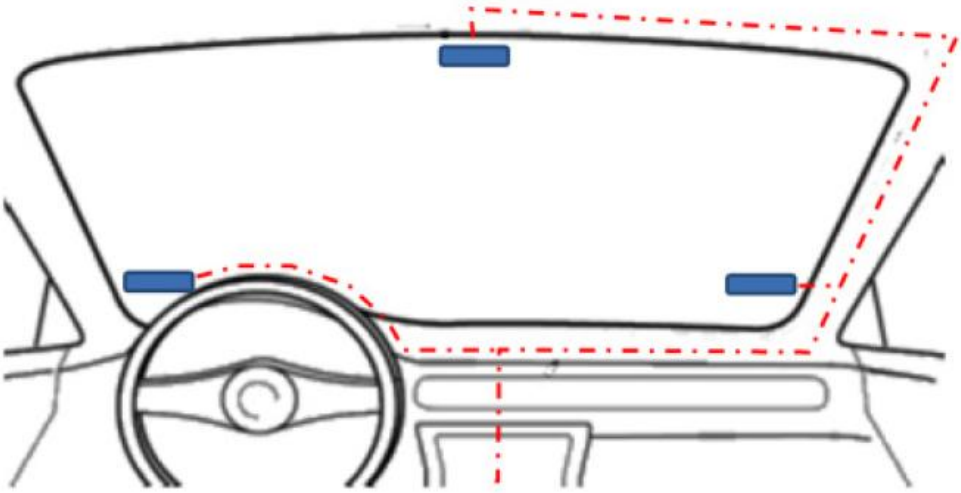

3. Insert the car charger into your vehicles cigarette lighter port as shown. A red light on the car charger will light up, indicating it is connected

TURNING THE CAMERA ON

The two ways in turning on your **A07B Dashcam**
1) Start your vehicle and the **A07B Dashcam** will automatically turn on and **begin recording.**
2) Long press the power button manually to turn on the **A07B Dashcam**

NOTE: The A07B Dashcam will automatically turn on/off whenever your vehicle turns on/ off, respectively.

.

LIGHT INDICATORS

Battery Charging Light (Red) Power Light (Blue)

On	Battery is currently charging (Red).	On	Carcam battery is currently charging (Red).	Off	Battery is fully charged (No Red light).
On	Power is on (Blue).	Off	Power is off (No Blue Light).	On	Power is on (Blue).

USED AS ACTION CAMERA

A Quick Introduction of how to attach your camera to helmets, gear and equipment.

Note : Please switch to Sports Mode by pressing On/Off/Switch button before put into the waterproof case .

BASIC OPERATIONS

SET DATE & TIME

1. Turn on your Carcam
   - Press and hold the Power button until the “Welcome” screen appears
2. Press the Menu button twice to get to “Setup” menu
3. Select the **Date&Time**
   - Press the “Down” button until **Date&Time** option is highlighted
   - Press the “OK” button
4. Change the Date&Time
   - Use the “**Up**” and “**Down**” buttons to change the date and the time
   - Use the “**ON/OFF/MODE SWITCH**” button to go to next , and use the “**OK**” to confirm the change .

FORMAT YOUR SD CARD

1. Turn on your Carcam
   - Press and hold the Power button until the “Welcome” screen appears
2. Press the Menu button twice until the “Setup” settings appears on the screen
3. Select the Format option
   - Press the “Down” button until **“Format”** option is highlighted
4. Confirm Formatting
   - Press “OK” to confirm your SD Card to be formatted

CHANGE TO DEFAULT SETTINGS

1. Turn on your Carcam
   - Press and hold the Power button until the “Welcome” screen appears
2. Press the Menu button twice until the “Setup” settings appears on the screen
3. Select the “System” option
   - Press the “Down” button until **“System”** option is highlighted ,and press OK .
4. Select the “Default Settings” option
   - Press the “Down” button until **“Default Settings”** option is highlighted
5. Confirm “Default Setting”
   - Press “OK” to confirm your Carcam will switch back to its default settings

BUTTONS & SETTINGS

BUTTONS

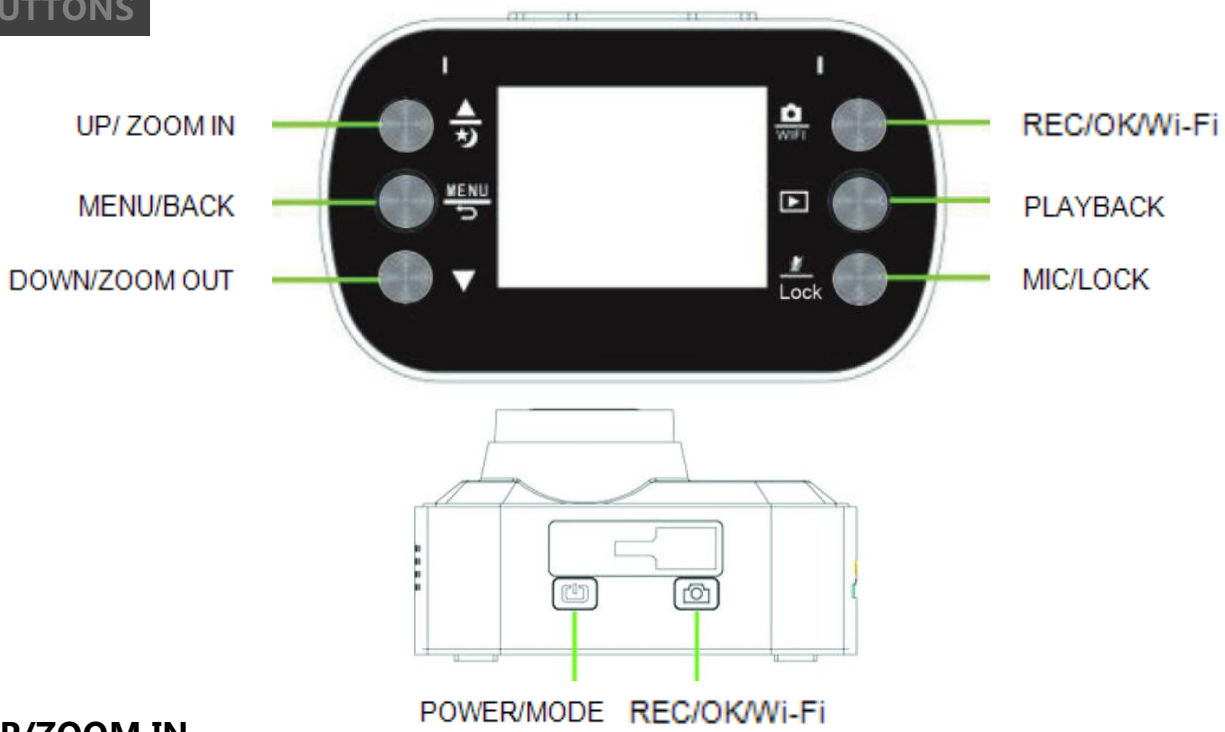

UP/ZOOM IN

The UP/ZOOM IN button is used to navigate through out the menu and make setting selections. It can also Zoom-In up to 2x its original distance while in video or photo mode.

（**Note**：Long press this button can enable/ disable the LED sensor when recording.　）

MENU/BACK

The MENU button allows access your Carcam menu settings. Pressing the Menu button again will access to Setup settings. While in the Car / Sports Video mode, you may access the Car / Sports Video and Setup settings. While in Photo mode, you may access the Photo and Setup settings. While in Playback mode, you may access the Playback and System settings.

DOWN/ZOOM OUT

The DOWN/ZOOM OUT button is used to navigate through out the menu and make setting selections. It is also used to Zoom-out while in video or photo mode.

REC/OK/ Wi-Fi

The REC/OK/Wi-Fi button is used to start and stop manual recording while in Video mode. It is also used to take pictures while in Photo mode. It can be used to make setting changes and select which event to view during playback. Long press this button to activate the Wi-Fi connection, Short press this button (when Wi-Fi is connected) to switch off Wi-Fi.

PLAYBACK

The PLAYBACK button is used to switch to Playback and view the video and photos been recorded. In Car/Sports/Photo Mode settings, press this button to enter Setup Settings.

MIC/LOCK

The MIC/LOCK button is used to switch on/off the audio record (long press). This function also locks the current video recording on your Carcam. By locking the video file, it will prevent the file from being manually deleted.

POWER / MODE

The POWER/MODE button is used to switch between Car mode, Photo and Sports mode , it also used to manually turn the **A07B Dashcam** on or off when needed(long press), but in most cases the **A07B Dashcam** will automatically turn itself on and off whenever the vehicle does.

SETTINGS

The **A07B Dashcam**'s settings are divided into 5 categories: Car Mode, Photo Mode, Sports Mode, Playback settings, and Setup settings.

NOTE: The "Setup" settings can be accessed from The Car Video, Photo and Sports Video settings .

CAR MODE SETTINGS

The Video configuration menu consists of settings and options that are used to configure the **A07B Dashcam**'s video recording settings. In the Car Video mode, press the "Menu" button to open up the Video configuration menu.

CAR MODE SETTINGS

The Video settings consist of the following configuration options.

- **Resolution** – Video resolution configuration.
- **Video Quality** – Video quality configuration .
- **Loop Recording** – Overwrite configuration.
- **Exposure** – Adjust the amount of light that will affect your image sensor.
- **Motion Detection** – Enables/Disables motion detection recording.
- **G-Sensor** – G-force sensor configuration
- **Parking Mode** – Enable captures Hit and Run even when vehicle turns off .
- **Date Stamp** – Enables/Disables date stamp on recorded events.

RESOLUTION

The A07B Dashcam supports various video resolutions that you can select from. The higher the resolution, the better your video quality and the bigger the video size will be.
Use the UP/DOWN keys to scroll through the options. Press the REC/OK button to select your desired settings. The available options include:

- **1080HD** @30fps (default)
- **720P** @30fps
- **720P** @60fps

VIDEO QUALITY

The A07B Dashcam supports various video quality that you can select from. The higher the quality, the better your video quality will be.
Use the UP/DOWN keys to scroll through the options. Press the REC/OK button to select your desired settings. The available options include:

- **Super Fine** (default)
- **Fine**
- **Normal**

LOOP RECORDING

The loop recording option serves as two features: "Overwrite"&"Segment Length". The **overwrite** feature allows the DVR to delete previously recorded events in increments when the SD card becomes full. The **segment length** feature is the length each recorded event can be before generating a new file. Use the UP/DOWN keys to scroll through the options. Press the REC/OK button to select your desired settings. The available options include:

- **Off** – Disables overwrite and enables the default 24 hour segment recording.

NOTE: Setting this feature to off will create on long video which will stop recording as soon as the file exceeds the memory cards capacity.

- **1 Minutes**– Enables the DVR to record/overwrite in 1 minute increments
- **3 Minutes** (default)– Enables the DVR to record/overwrite in 3 minute increments
- **5 Minutes** – Enables the DVR to record/overwrite in 5 minute increments

EXPOSURE

The exposure option lets you select the numeric exposure value for your video recording. The exposure feature consists of the following options:

- +2.0
- +5/3
- +4/3
- +1.0
- +2/3
- +1/3
- +0.0 (default)
- -1/3
- -2/3
- -1.0
- -4/3
- -5/3
- -2.0

MOTION DETECTION

The motion detection option is used to enable/disable motion detection recording. While the Carcam is on, and the Carcam is on standby, any movement in front of it will trigger a recording. The Motion Detection feature consists of the following options:

- **Off/Disable(**default)
- **On/Enable**

NOTE: Make sure the "Auto Power Off" function is set to "Off" to let the Carcam stay on during standby mode. When motion detection is active or turned ON, the G sensing will be deactivated. Please make sure motion detection is turned OFF for 2G and 4G sensor to function properly.

DATE STAMP

The date stamp option is used to enable/disable the date & time stamp from being displayed on playback videos. The date stamp feature consists of the following options:

- **Off/Disable**
- **On/Enable** (default)

G-SENSOR

The G-Sensor option is used to enable/disable the Carcam's G-force/impact sensor which will lock the previous and current file from being deleted by the overwrite feature. The G-force acts as a sensor for the Carcam to secure any video files recorded in the event that the vehicle gets hit. Any force that is acted upon the vehicle will result in locking the current recording video file.

NOTE: Formatting the SD card will result in erasing all files, including the locked video files. The G-Sensor feature consists of the following options:

- **Off/Disable**
- **2G** (default)- Represents 9.8m/s2 of force (passenger car turning on a corner)
- **4G**- Represents 19.62m/s2 of force (bump on the road)
- **8G**- Represents 39.2m/s2 of force (car collision)

PARKING MODE

Parking protection functionality offers peace-of-mind while you're away from your vehicle. From collisions with other drivers who may bump into your vehicle and leave the scene. Any force that is acted upon the vehicle will activate the Carcam to switch on, record and lock the segment. Parking Mode feature consists of the following options:

- **On**
- **Off** (default)

SETUP SETTINGS

The Setup menu configures the **A07B Dashcam**'s system settings such as date and time, language, default settings, etc. It can be accessed from the Car Mode, Photo and Sports Mode. Press the Menu button twice to access the Setup menu.

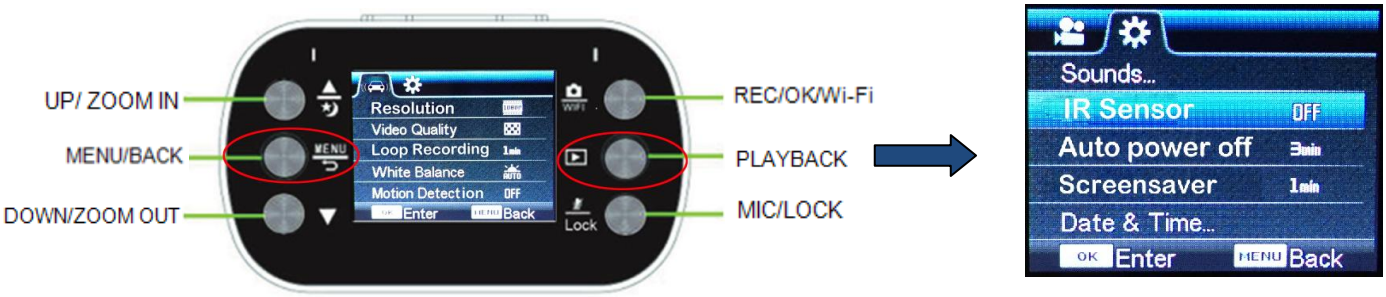

SETUP SETTINGS

The Setup settings consist of the following configuration options. Press the Menu Button twice.

- **Sound** – Beep / Volume / Audio Recording configuration.
- **LED Sensor** – Enables/Disables the infrared night vision (LED light).
- **Auto Power Off** – Auto System Shut Off configuration.
- **Screensaver** – Backlight/screensaver duration configuration.
- **Date/Time** – Date and Time configuration.
- **Flip Screen**– Flips your screen upside-down.
- **Language** – Language settings.
- **TV Mode** – TV mode configuration
- **Frequency** – Light frequency configuration.
- **White Balance**– White balance configuration.
- **Wi-Fi Password**– Change Device Wi-Fi password .
- **System** – Include Firm Version / Default Setting / Card info configuration .
- **Format**– Formats your SD card.

SOUND

The Sound option include Beep sound / Volume adjust / Audio Recording configuration. The Sound feature consists of the following options:

- **Beep Sound** – Enables/Disables button sound , press "OK" to switch .
- **Volume** – Volume up or down of the button beep sound , press "OK" to switch .
- **Audio Recording** – Enable / disable the audio recording along with video recording.

NOTE: Some states prohibit the use of audio recording. Please make sure you contact your local law enforcement agency if you are unclear on your Country or state laws and guidelines.

LED SENSOR

The LED Sensor enables/disables the LED night vision sensor, to control the LED light on/off.

- **On**
- **Off**(default)

AUTO POWER OFF

The auto power off option is an auto shut-down feature which, after a set time frame of inactivity (not recording) or standby, the Carcam shuts off. The auto power off feature consists of the following options:

- **Off** (default)
- **1 Minute**
- **3 Minutes**
- **5 Minutes**

SCREENSAVER

The backlight option controls the time you want your screen to stay on before the screen turns off during video recording. For safety purposes, it is recommended for the screen on the Carcam to not stay on while the vehicle is in motion. The backlight feature consists of the following option:

- **Off**
- **1 Minute** (default)
- **3 Minute**
- **5 Minutes**

DATE/TIME

The Date&Time option is used to set and configure the **A07B Dashcam**'s current date and time format. The button configurations are listed and described below:

- **UP/DOWN** – Use these to scroll through each selection
- **POWER/MODE** – This button scrolls through the date and time (i.e. Month to Day to Year, etc.)
- **REC/OK** – Press this button to accept and save your date/time.

FLIP SCREEN

The image rotation flips the screen, vertically. This provides the option of having the Carcam mounted upside down. The image rotation setting feature consists of the following options:

- **Off** (default)
- **On** – Selecting this option flips the screen

LANGUAGE

The language option lets you change the language of the Carcam. The language feature consists of the following options:

- **English** (default)
- **French**
- **Spanish**
- **Italian**
- **Chinese**
- **Russian**
- **Japanese**

FREQUENCY

The frequency option switches between the two most commonly used refresh rates “60Hz” and “50Hz”. By default the **A07B Dashcam**is set to 60Hz which is standard for United Sates and Japan. The frequency feature consists of the following options:

•**50Hz** – Standard for Europe and China.
•**60Hz** (default) – Standard for United Sates and Japan.

WHITE BALANCE

The white balance option lets you remove unrealistic color casts, so that objects which appear white in person are rendered white in your photo. The white balance feature consists of the following options:

- **Auto** (default)
- **Daylight**
- **Cloudy**
- **Tungsten**
- **Fluorescent**

Wi-Fi Password

The Wi-Fi Password option is used to set and configure the **A07B Dashcam**’s current Wi-Fi password.

- **UP/DOWN** – Use these to scroll through from “1” to “10” or “a” to “z” .
- **POWER/MODE** – This button scrolls through from the previous to next .
- **REC/OK** – Press this button to accept and save your new Wi-Fi password.

SYSTEM

This option Include Firm Version / Default Setting / Card info configuration.

- **Default Settings -** The default setting option is used apply the **A07B Dashcam**’s manufacturer default settings.
- **Firm Version** - The version option is used to view the **A07B Dashcam**’s firmware.
- **Card info -** The Card info option is used to view the information of the Memory card .

NOTE:

Update firmware:

1) To update your Carcam's firmware, make sure you have the firmware file downloaded and pasted it into the root of the micro SD card on your PC.
2) Insert the micro SD card into your Carcam device.
3) Turn on the Carcam. The power light will turn on and the screen will remain black.
4) Wait for the firmware to install into the Carcam
5) Once complete, the Carcam screen will display its welcome screen
6) To check if the firmware has been updated, go into the Setup Settings menu and check the "Version"

NOTE: Please remember to remove the firmware file from your micro SD card to prevent the firmware from flashing every time you restart your Carcam device.

FORMAT

The format setting option is used to erase all files inside your SD card, including protected files. The format feature consists of the following options:

- **Cancel**
- **Ok**

PHOTO MODE SETTINGS

The Camera configures the **A07B Dashcam**'s photo snapshot settings. In the Photo mode, press the "Menu" button to open up the Camera configuration menu.

PHOTO MODE SETTINGS

The Camera settings consist of the following configuration options.

- **Resolution** – Photo resolution configuration.
- **Quality** – Picture quality configuration .
- **Capture Mode** – Used to configure single or timed snapshots.
- **Burst Mode** – Burst mode option.

- **Date Stamp** - Enables/Disables date stamp on recorded events.
- **Sharpness** – Image sharpness configuration.
- **Exposure** – Image exposure adjustment.

RESOLUTION

The **A07B Dashcam** supports various “Mega Pixel” resolutions that you can select from. The resolution feature consists of the following options:

- **10MP**
- **8MP**
- **6MP**
- **3MP** (default)

QUALITY

The A07B Dashcam supports various picture quality that you can select from. The higher the quality, the better your video quality will be.
Use the UP/DOWN keys to scroll through the options. Press the REC/OK button to select your desired settings. The available options include:

- **Super Fine** (default)
- **Fine**
- **Normal**

CAPTURE MODE

The capture mode option lets you configure how the A07B Dashcam will operate every time the snap shot button is pressed. For example, you can set it to take an instant snap shot every time or you can implement a timer delay which will automatically take a snap shot when the set time has expired. The capture mode feature consists of the following options:

- **Single** (default)
- **2S Timer**
- **5 S Timer**
- **10 S Timer**

BURST MODE

The burst mode option lets you enable the “multiple shot” option. When you take a snapshot, it will take multiple shots in a single take, up to 5 pictures. The burst mode feature consists of the following options:

- **Off** (default)
- **5 pictures**

DATE STAMP

The date stamp option lets you enable or disable the time stamp from being displayed on all the photos. The date stamp feature consists of the following options:

- **Off**
- **On** (default)

SHARPNESS

The sharpness option lets you select the image sharpness of the photos being taken. They make edges appear more defined by darkening the darker pixels and brightening the brighter pixels. The sharpness feature consists of the following options:

- **Strong**
- **Normal** (default)
- **Soft**

EXPOSURE

The exposure option lets you select the numeric exposure value for your snap shots. The exposure feature consists of the following options:

- +2.0
- +5/3
- +4/3
- +1.0
- +2/3
- +1/3
- +0.0 (default)
- -1/3
- -2/3
- -1.0
- -4/3
- -5/3
- -2.0

SPORTS MODE SETTINGS

SPORTS MODE SETTINGS

The Video settings consist of the following configuration options.

- **Resolution** – Video resolution configuration.
- **Video Quality** – Video quality configuration .
- **Exposure** – Adjust the amount of light that will affect your image sensor.

- **Anti-Shaking** – Enables/Disables anti-shaking configuration.
- **Date Stamp** – Enables/Disables date stamp on recorded events.

RESOLUTION

The A07B Dashcam supports various video resolutions that you can select from. The higher the resolution, the better your video quality and the bigger the video size will be.
Use the UP/DOWN keys to scroll through the options. Press the REC/OK button to select your desired settings. The available options include:

- **1080HD** @30 fps (default)
- **720P** @30 fps
- **720P** @60 fps

VIDEO QUALITY

The A07B Dashcam supports various video quality that you can select from. The higher the quality, the better your video quality will be.
Use the UP/DOWN keys to scroll through the options. Press the REC/OK button to select your desired settings. The available options include:

- **Super Fine** (default)
- **Fine**
- **Normal**

EXPOSURE

The exposure option lets you select the numeric exposure value for your video recording. The exposure feature consists of the following options:

- +2.0
- +5/3
- +4/3
- +1.0
- +2/3
- +1/3
- +0.0 (default)
- -1/3
- -2/3
- -1.0
- -4/3
- -5/3
- -2.0

Anti-shaking

The Anti-shake enables/disables the anti-shake function in Sports mode.

- **On** (default)
- **Off**

DATE STAMP

The date stamp option is used to enable/disable the date & time stamp from being displayed on playback videos. The date stamp feature consists of the following options:

- **Off/Disable**
- **On/Enable** (default)

PLAYBACK SETTINGS

The Playback settings menu provides actions for video clips or photos that have been recorded in the Carcam. In the Playback mode, you can press “OK” button to play/pause and press the “Menu” button twice to open up the Playback configuration menu.

PLAYBACK SETTINGS

The Playback settings consist of the following configuration options.

- **Delete** – Delete video/photo files
- **Protect** – Protect video/photo files

DELETE

This option allows you to delete video or photo files in your SD card. You may choose to delete one file at a time or delete all simultaneously. The available options include:

- **Delete Current** – Delete selected video/photo
- **Delete All** – Delete all videos and photos in the Carcam

NOTE: Any protected files will not be deleted if “Delete All” is selected

PROTECT

The Protect option helps prevent any video files or photo files from being deleted. When selecting “Delete All”, the protected file will not be erased.

NOTE: When “Formatting” the SD card, protected files will also be erased.
The available options include:
- **Lock / Unlock Current** – Protects the selected file. If the file is already protected, selecting this option will unprotect the file.
- **Lock All** – Locks all files on the SD card.
- **Unlock All** – Unlocks all files on the SD card.

PLAYING BACK VIDEOS

You can play back recorded events using two methods; directly from the A07B Dashcam or on a computer.

A07B Dashcam

To play back events directly from the **A07B Dashcam** navigate to the playback screen using the Playback button. You can use the following buttons to play back and delete the recorded events:

NOTE: Traffic lights may flash during playback.

BUTTON	ACTION	DESCRIPTION
REC/OK	Press once (when not playing back video)	- Selects the highlighted event to play back/view - Confirm an option when prompted
	Press once (during video play back)	- Pause the video.
Playback	Press once	- Switches to "Video" mode
Up	Press once (during multiple file view)	- Used to navigate through the recorded events.
	Press once (during video play back)	- Fast forward the video
Down	Press once (during multiple file view)	- Used to navigate through the recorded events.
	Press once (during video play back)	- Rewind the video.

COMPUTER

To playback recorded video on a PC or Mac:

1. Remove the Micro-SD card from the camera by gently pushing on the SD card allowing it to pop out from its slot.
2. Insert the Micro-SD card into a Micro-SD card reader (not included) connected to your PC (your PC should load the SD card as a new Removable Drive).
3. When prompted, select the "Open folder to view files" option to view its contents (you should see folders labeled "LOCK" ,"JPG","VIDEO","SPORT").
4. Open the LOCK folder to view a list of all the recorded video locked by G-force .
5. Open the JPG folder to view a list of all the Pictures.
6. Open the VIDEO folder to view a list of all the recorded video in Car mode.
7. Open the SPORT folder to view a list of all the recorded video in Sports mode.
8. Once inside the folder you can double-click any of the recorded MOV or JPG files to open them up in your default media player.

Wi-Fi Control

Download App

Download the free Wi-Fi viewer app from IOS App Store or Android Apps on Google Play

- Download the App named “ ismart DV “ from App store or Google Play

Turn on the Wi-Fi on device

1. Turn on your Carcam
   - Press and hold the Power button until the “Welcome” screen appears
2. Turn on your Wi-Fi
   - Press and hold the REC/OK button until the “ Waiting for Wi-Fi connection..” screen appears.

Connect the device Wi-Fi

1. Enter the Settings of your smartphone
   - Turns the Wi-Fi on
   - Find the Wi-Fi named “view-0001” and select .
2. Connect the Wi-Fi
   - Type in the initial password “12345678” and get connected
   - “ Wi-Fi connection is ready..” screen appears on A07B Dashcam .

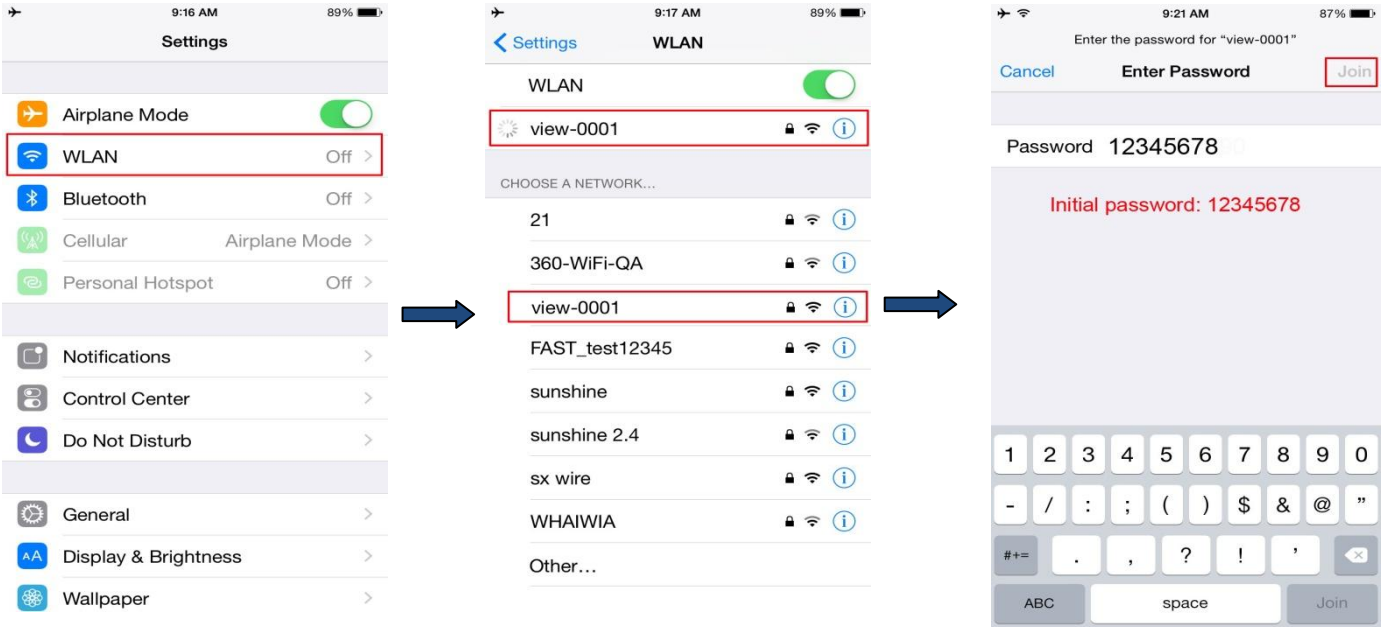

Application

1. Record
   - Choose the Camcorder icon at lower right corner to switch to Video Recording mode .
   - Choose the Camera icon at lower right corner to switch to Photo Capturing mode .
   - Press the small red spot in the middle of the screen bottom to REC .

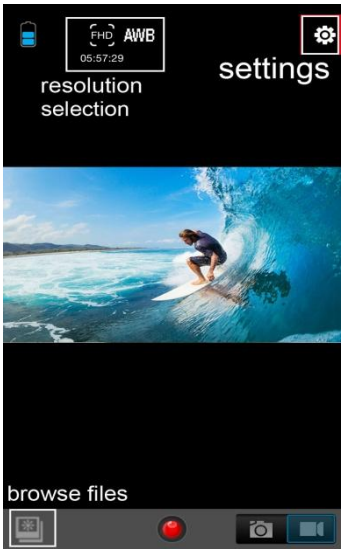

2. Download / Delete files
   - Press the icon at lower left corner to enter files browser and download / delete the files .

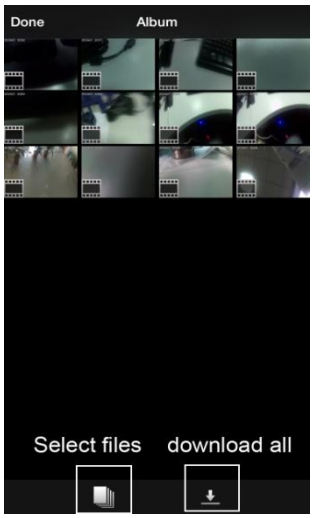

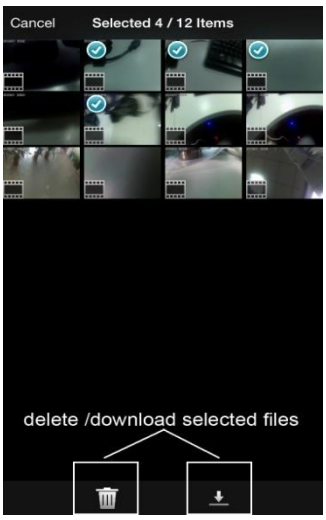

3. Change Settings
   - Press the Settings icon at upper right corner to enter device settings .
   - Press the Resolution / AWB / Timer icon in the middle of the screen to change the settings.

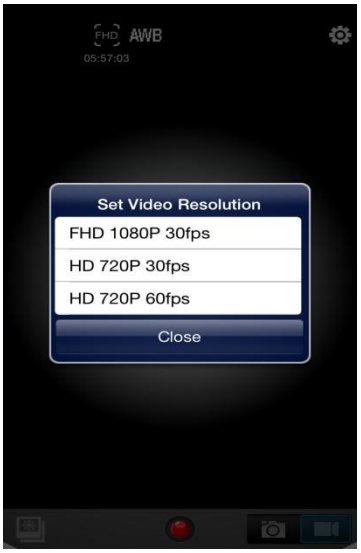

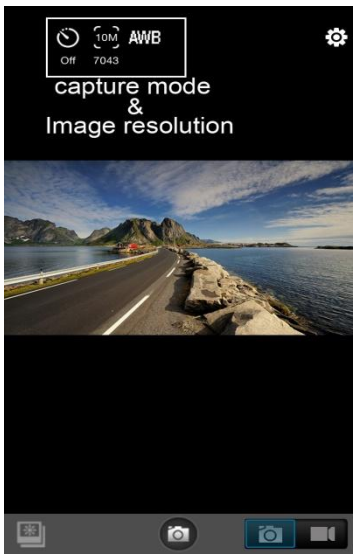

Specifications

LCD Size	1.5” TFT LCD
Image Sensor	Digital HD color CMOS
Viewing angle	170°A+ grade high-resolution ultra wide-angle
Language for options	English/French/Spanish/Italian/Traditional Chinese/ Simplified Chinese/Japanese/Russian
Video resolution	1080P 1920*1080 @ 30fps , 720P 1280*720 @ 30fps , 720P 1280*720 @ 60fps
Video/Photo formats	MOV / JPEG
Recording video format	M-JPEG
Photo pixels	3M /6M/8M/10M Pixels
SD slot	Micro SD card (supports up to 32GB, class 4 or above)
Overwrite	Yes
Wi-Fi	Yes,Built-in
Microphone	Built-in (Menu: On/Off)
Speaker	Built-in
Recording frame rate	30fps/60fps
Video recording mode	*Auto record when the ignition is turned on and stop when engine is turned off (with car cigarette lighter cable connected) *Manual record by pressing REC button *Video Motion Detection record
Shooting mode (photo)	Single, 2s timer, 5s timer, 10s timer,
Frequency	60Hz/50Hz
TV standard	NTSC/PAL
USB port	USB 2.0
PC mode (via USB)	Mass Storage or PC Camera
Power supply	Input: DC12V-24V, Output: 5VDC / 1.0A
Rechargeable battery	3.7V / 700 mAh (Charging time: 120-Minutes. Recording time: 90-Minutes. Standby Time: 120-Minutes)
Camera size (L*W*H)	2.80”x1.2”x1.5”(without bracket and waterproof case)
Operating temperature	-10°C to 50°C (14°F~122°F)
Non-Operating temperature	-20°C to 65°C (-4°F~149°F)
Operating humidity	≤85% RH

If you encounter any difficulty in the operation of this product after reading the manual, please feel free to contact the reseller. We will be happy to answer your questions and help you in any way we can.

FCC Statement

This equipment has been tested and found to comply with the limits for a Class B digital device, pursuant to part 15 of the FCC rules. These limits are designed to provide reasonable protection against harmful interference in a residential installation. This equipment generates, uses and can radiate radio frequency energy and, if not installed and used in accordance with the instructions, may cause harmful interference to radio communications. However, there is no guarantee that interference will not occur in a particular installation. If this equipment does cause harmful interference to radio or television reception, which can be determined by turning the equipment off and on, the user is encouraged to try to correct the interference by one or more of the following measures:

-Reorient or relocate the receiving antenna.

-Increase the separation between the equipment and receiver.

-Connect the equipment into an outlet on a circuit different from that to which the receiver is connected.

-Consult the dealer or an experienced radio/TV technician for help.

To assure continued compliance, any changes or modifications not expressly approved by the party.

Responsible for compliance could void the user’s authority to operate this equipment. (Example- use only shielded interface cables when connecting to computer or peripheral devices).

This equipment complies with Part 15 of the FCC Rules. Operation is subject to the following two conditions:

(1) This device may not cause harmful interference, and

(2) This device must accept any interference received, including interference that may cause undesired operation.

RF warning statement:

The device has been evaluated to meet general RF exposure requirement. The device can be used in portable exposure condition without restriction.