C53 4.3-inch Back-Up Camera

Quick Start Guide

Contents

SAFETY PRECAUTIONS ----------2

BACK-UP CAMERA SAFETY ----------2

INTRODUCTION ----------3

FEATURES ----------4

WHAT'S IN THE BOX ----------4

INSTALLATION ----------5

OVERVIEW ----------10

SETTINGS ----------11

SPECIFICATIONS ----------13

SAFETY PRECAUTIONS

⚠ WARNING

This product contains a chemical known to the State of California to cause cancer or birth defects or other reproductive harm.

This safety alert symbol indicates that a potential personal injury hazard is present. The symbol is usually used with a signal word (e.g., WARNING) Which designates the degree or level of hazard seriousness.
The signal word WARNING indicates a hazardous situation which, if not avoided, would result in death or serious injury.
The signal word NOTICE indicates a situation which can cause damage to the product, other personal property and/or to the environment, or cause the product to operate improperly.
The combination of the safety alert symbol and signal word is used in safety messages throughout this manual and on safety labels on this product.

⚠ WARNING

All safety messages that follow have WARNING level hazards. Failure to comply could result in death or serious injury.

Back-Up Camera Safety

- Please check with your local and state authorities to confirm what is legal regarding the mounting of the Back-Up Camera to your vehicle. It is the responsibility of the vehicle owner to understand state and municipal

regulations and ensure compliance.

- When installing the Back-Up Camera, the vehicle must be turned off with the vehicle in park and the park brake applied.
- Do not attempt to install the Back-Up Camera while the engine is operating.
- Do not modify the wiring in any way.
- Only install the Back-Up Camera to a 12-volt vehicle wiring, have the Back-Up Camera professionally installed.
- This device as well as other wireless devices may be subject to interference. Interference may be caused by cellphones, Bluetooth headsets, Wi-Fi routers, power lines and other various electrical equipment.
- Keep all power cords and wires away from the vehicle' s mechanical controls.
- Do not mount the monitor where it will interfere with your view of the road.
- Do not adjust monitor settings while operating the vehicle.
- Do not install the Back-Up Camera to the front of your vehicle.
- Do not use in a vehicle which sounds an alarm or horn when driving in reverse.
- Do not paint or spray the camera.

INTRODUCTION

The Back-Up Camera displays images behind the vehicle, and is used when backing up a vehicle. When the vehicle is driven in reverse, the camera is activated, which sends a signal to the transmitter. The transmitter sends a video signal to the monitor, which then display what the camera is capturing.

FEATURES

- Color monitor display image gotten from the rear of the vehicle.
- Wireless monitor can be mounted to windshield or dash for easy visibility
- Adjustable vertical camera angle
- Infrared LED lights for nighttime vision
- Weatherproof camera With 100° viewing angle.
- Parking Asist activates automatically when car is shifted to reverse

What's in the Box

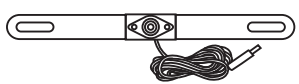

Back-Up Camera
with Cable X 1

Extended Cable
with Transmitter X 1

Monitor X 1

Car Charger
with Power Cable X 1

Quick Start Guide

Installation

NOTICE

Some states or local governments may have regulations or laws that restrict the use of anything that might impair the clear view of a license plate. Check local laws for compliance.

NOTICE

For the Back–Up Camera to be properly installed, It must be wired into the vehicle’s taillight harness. If you are not comfortable or knowledgeable with 12–Volt or 24–Volt DC wiring, have the system professionally installed.

NOTICE

These instructions are only meant as a general guide due to the number of different makes and models of vehicles. For vehicle–specific questions, contact your vehicle’s manufacturer.

(1).Remove the screws that hold the license plate to the vehicle and install the Back-Up camera as the picture shown. The side with 2 screws should face down to the ground.

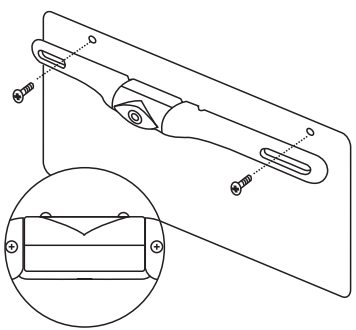

NOTICE

The camera should be mounted to a horizontal position relative to the ground.

(2).Lose the screws on the camera’s bottom, so as to pitch the camera to a desired angle.

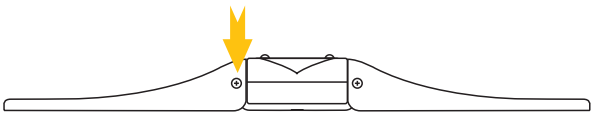

(3).Install the license plate screws to secure the camera to the vehicle.
(4).There’s a notch on the mount of the Back-Up Camera. When you mount the Back-Up Camera on the vehicle, please run the cable through the notch.

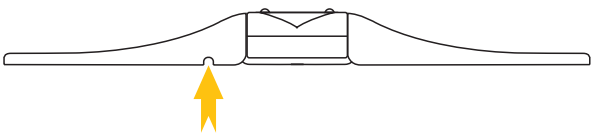

(5).Connect two 4 pin cables and the two arrow on its connector should point at each other.

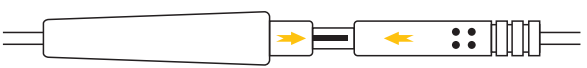

(6).Make sure the vehicle engine is off before you check the vehicle wires and splice the camera wires into the reverse light’s.
(7).Determine which are the positive (+) and negative (-) wires for the reverse lights on the vehicle. You can use either the right-or-left-side reverse light wires. For help locating the vehicle’s reverse light circuit, contact your vehicle’s manufacturer for vehicle-specific wiring diagrams.

(8).Remove the vehicle' s negative (-) battery cable.

(9).Once the proper wires for the reverse lights have been determined, the camera wires must be spliced into the vehicle wires. To wire the camera, you must be knowledgeable in 12-volt or 24-volt DC electrical practices.

(10).The red positive (+) wire from the camera splice into the positive (+) wire from the reverse lights and the black negative (-) wire from the camera splices into the negative (-) wire from the reverse lights.

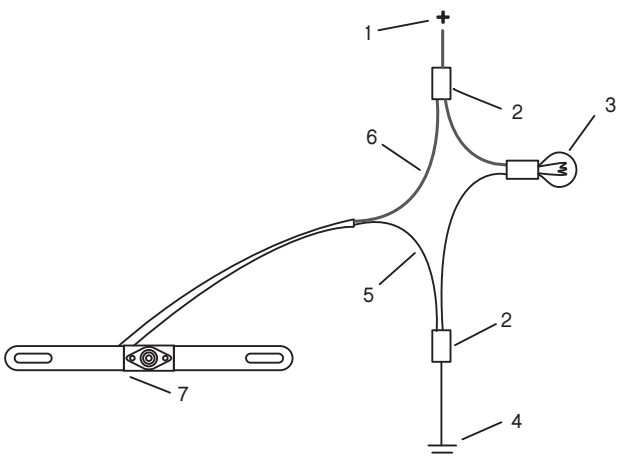

1. Positive (+) Wire from Reverse light
2. Wire Connector
3. Reverse light
4. Negative wire (-) from Reverse Light
5. Negative (-) Camera Power Wire (Black)
6. Positive Camera Power Wire (Red)
7. Back-Up Camera

(11).Using the electrical tape to fix the wire you are splicing into the vehicle.

(12).Run the Back-Up Camera's cables as the picture shown below.

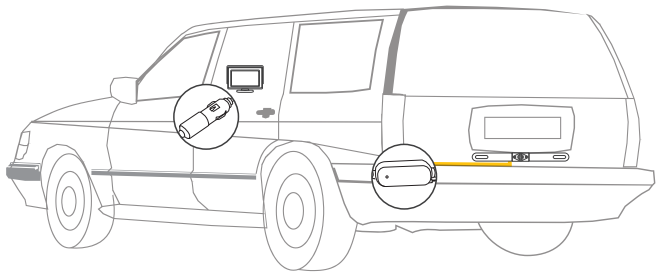

(13).Remove the protector coverage on the adhesive mount of the monitor and mount the monitor on a proper position that will not interfere with a driver's view of the road.

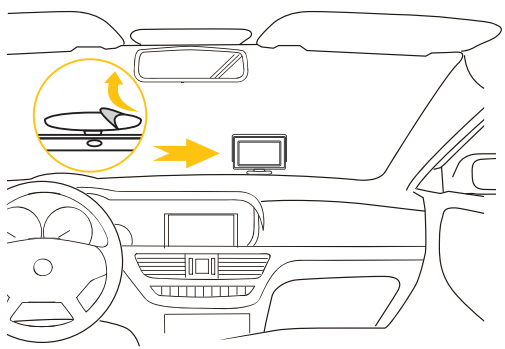

(14).The monitor can be adjusted to a desired angle.

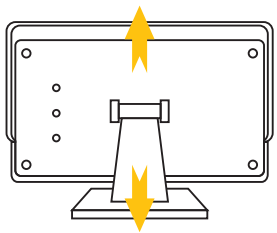

(15).Connect the monitor's power cables and insert the car charger into the cigarette lighter's socket.

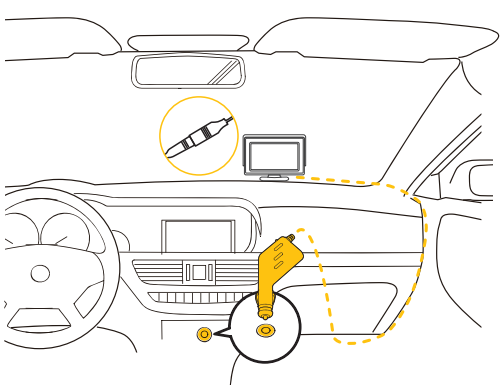

(16).When you reverse your vehicle, it will activate the monitor automatically and offer a rear view for parking as assist.

NOTE: The monitor will remined off until the reverse light is triggered.

Overview

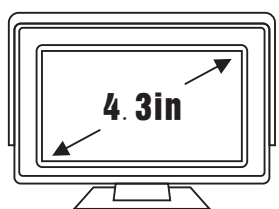

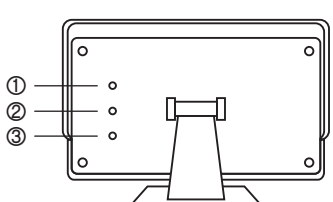

① Up ② Menu ③ Down

Settings

Language Setting

The language by default is English. Press the menu button 6 times then the language setting will pop up. Press Up or Down button to select a preferred language.

△English ✓	△Portuguese
△Turkish	△Spanish
△Polish	△Italian
△Japanese	△French
△Chinese	△German
△Russian	

Brightness

Press the “Up” button to increase the value and press “down” button to decrease the value.

Contrast

Press the “Up” button to increase the value and press “down” button to decrease the value.

Staturation

Press the “Up” button to increase the value and press “down” button to decrease the value.

Tint

Press the “Up” button to increase the value and press “down” button to decrease the value.

Mode

To select a screen ratio, 16:9.

Specifications

Screen Size	4.3in
Resolution	640*480
TV Mode	NTSC/PAL
Operating Temp.	-10°C-65°C
Input voltage	DC 12V
Transmitter	2.4GHz
Transmission Range	10m
Transmitter Operating Temp	14°F-131°F
Back–Up Camera Horizontal Viewing Angle	110°
Operating Temp of Back–Up Camera	14°F-158°F

FCC Statement

This equipment has been tested and found to comply with the limits for a Class B digital device, pursuant to part 15 of the FCC rules. These limits are designed to provide reasonable protection against harmful interference in a residential installation. This equipment generates, uses and can radiate radio frequency energy and, if not installed and used in accordance with the instructions, may cause harmful interference to radio communications. However, there is no guarantee that interference will not occur in a particular installation. If this equipment does cause harmful interference to radio or television reception, which can be determined by turning the equipment off and on, the user is encouraged to try to correct the interference by one or more of the following measures:

-Reorient or relocate the receiving antenna.

-Increase the separation between the equipment and receiver.

-Connect the equipment into an outlet on a circuit different from that to which the receiver is connected.

-Consult the dealer or an experienced radio/TV technician for help.

To assure continued compliance, any changes or modifications not expressly approved by the party.

Responsible for compliance could void the user's authority to operate this equipment. (Example- use only shielded interface cables when connecting to computer or peripheral devices).

This equipment complies with Part 15 of the FCC Rules. Operation is subject to the following two conditions:

(1) This device may not cause harmful interference, and

(2) This device must accept any interference received, including interference that may cause undesired operation.

FCC Radiation Exposure Statement:

The equipment complies with FCC Radiation exposure limits set forth for uncontrolled enviroment. This equipment should be installed and operated with minimum distance 20cm between the radiator and your body.