Scanner User's Guide
eScan A450

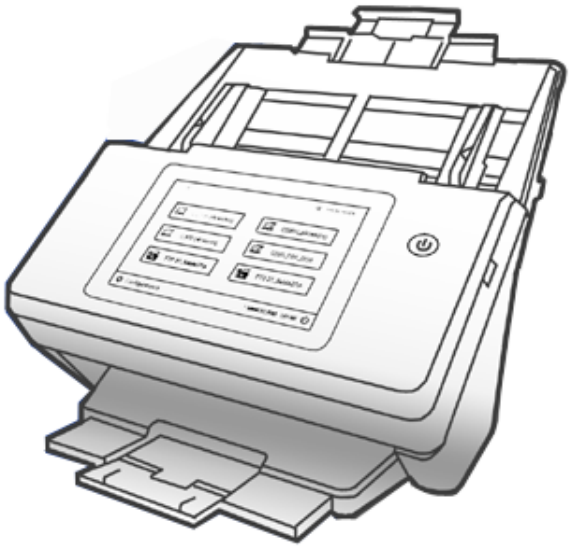

Trademarks

© 2023 Plustek Inc. All rights are reserved. No portion of this document may be reproduced without permission.

All trademarks and brand names mentioned in this publication are property of their respective owners.

Liability

While all efforts have been made to ensure the accuracy of all contents in this manual, we assume no liability for errors or omissions or by statements of any kind in this manual, whether such errors are omissions or statements resulting from negligence, accidents, or any other cause. The contents of this manual are subject to change without notice. We will not shoulder any legal liability, if users failed to follow the operation instructions in this manual.

Copyright

The scanning of certain documents, for example checks, bank notes, I.D. cards, government bonds, or public documents, may be prohibited by law and/or subject to criminal prosecution. We recommend you to be responsible and respectful of the copyrights laws when you are scanning books, magazines, journals and other materials.

Environmental Information

Recycle or disposal at end-of-life information, please ask local distributors or suppliers for recycle and disposal information. The product is designed and produced to achieve sustainable environmental improvement. We strive to produce products in compliance with global environmental standards. Please consult your local authorities for proper disposal.

The product packaging is recyclable.

Attention for recycling (For EU country only)
Protect your environment! This product should not be thrown into the household waste container. Please give it to the free collecting center in your community.

Table of Contents

INTRODUCTION **1**
How to Use This Guide 1
Conventions of This Guide 1
A Note about Icons *1*
Safety Precautions 2
Box Contents 3
Network Environment 4

CHAPTER I. INSTALLING THE SCANNER **5**
Installing and Setting up the Scanner 5
Step 1. Installing the Paper Chute *6*
Step 2. Connecting the Scanner *7*
Configuring the System 8
Job Button Scan 8

CHAPTER II. CARE AND MAINTENANCE **9**
Cleaning the Scanner 9
Cleaning Materials *9*

APPENDIX A: SPECIFICATIONS **10**

APPENDIX B: CUSTOMER SERVICE AND WARRANTY **12**
Service & Support Information 12
Statement of Limited Warranty 12
FCC Interference Statement 14
Simplified EU Declaration of Conformity 15
Manufacturer Information 15

INTRODUCTION

Thank you for choosing us as your scanner supplier.

Like all of our products, your new scanner is thoroughly tested and backed by our reputation for unsurpassed dependability and customer satisfaction. We hope you will continue to turn to us for additional quality products as your computing needs and interests grow.

HOW TO USE THIS GUIDE

This User's Guide provides instructions and illustrations on how to install and operate your scanner.

The Introduction section of this manual describes the box contents. Before you start installing your scanner, check the box contents to make sure all parts are included. If any items are damaged or missing, please contact the vendor where you purchased your scanner or our customer service directly.

Chapter I describes how to install and configure the scanner.

Chapter II describes how to maintain and clean your scanner.

Appendix A contains the specifications of the scanner you purchased.

Appendix B contains our customer service, the limited warranty agreement and FCC statement concerning the product.

CONVENTIONS OF THIS GUIDE

Bold —Represents commands or contents on your computer screen.

ALL CAPS —Important note or first use of an important term in a chapter.

Italic —Represents buttons on your scanner OR important notes.

A Note about Icons

This guide uses the following icons to point out information that deserves special attention.

Warning

A procedure that must be followed carefully to prevent injury, or accidents.

Attention

Instructions that are important to remember and may prevent mistakes.

Information	Optional tips for your reference.

SAFETY PRECAUTIONS

Warning	Before using this device, please read the following important information to eliminate or reduce any possibility of causing damage and personal injury.

1. Usage, the product is for indoor use in dry locations. Moisture condensation may occur inside this device and cause malfunction at these conditions:
   - when this device is moved directly from a cold to a warm location;
   - after a cold room is heated;
   - when this device is placed in a damp room.

   To avoid the moisture condensation, you are recommended to follow the procedure:

   i. Seal this device in a plastic bag for it to adapt to room conditions.

   ii. Wait for 1-2 hours before removing this device from the bag.
2. Do use the AC adapter provided with the scanner. Use of other AC adapter may lead to malfunction.
3. Keep the space around the AC adapter clear in case you need to quickly unplug the AC adapter during emergencies.
4. Damaged wire could cause fire or electrical shock. Keep the power cord straight and without being twisted, bended, or scraped.
5. Unplug this device if you don't need to use for a certain period of time, such as, during night or long weekend, to avoid any risks of causing fire.
6. Do not attempt to disassemble the scanner. There is danger of an electrical shock and opening your scanner will void your warranty.
7. Be sure not to bump or knock the scanner glass as it is fragile and could break.
8. Do not subject the scanner to excessive vibration. It may damage the internal components.

BOX CONTENTS[1]

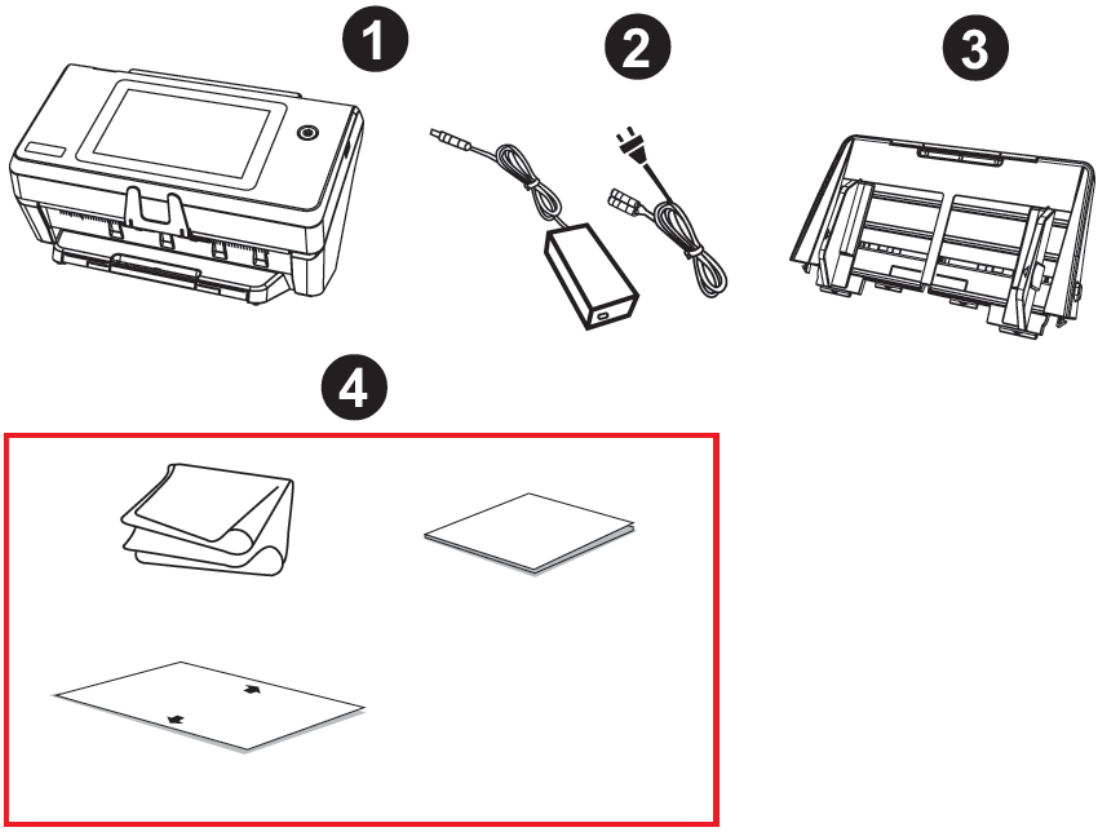

1. Scanner
2. AC Adapter
3. Paper Chute
4. Quick Guide, Calibration Sheet, Cleansing Cloth

[1] Save the box and packing materials in case you need to transport this scanner in the future.

NETWORK ENVIRONMENT

- Basic knowledge of network setup and configuration will be helpful for you to operate this scanner. When you are using this scanner in a corporate environment, you may need to consult your network administrator or ISP.
- The scanner requires a DHCP server. A DHCP server automatically provides all devices within a network environment with IP addresses, so there is no need to manually set an IP address for the scanner.
- Please make sure there is an active Internet connection while using the scanner. The scanner requires access to the Internet to retrieve the date and time.
- When saving scanned documents to a computer or mobile device, the scanner and the target device must be on the same segment of the network.
- The actual wireless data transmission speed varies depending on the wireless LAN environment in which you use this device. Other electrical devices (e.g. microwave oven), a large distance, obstruction, or interferences between the participating devices and the wireless access point/router can cause the data transmission to slow down or not be possible at all.

CHAPTER I. INSTALLING THE SCANNER

Before installing your scanner, please verify that you have all of the proper components. A list of the package contents is provided in the “Box Contents” section of this guide.

INSTALLING AND SETTING UP THE SCANNER

Please follow the step-by-step procedures described below to install the Plustek scanner.

Attention	**Choose a Proper Site First!** ● Always place your scanner on a level, smooth and strong surface before proceeding the scanner setup or any scanning task. Tilted or uneven surface may cause paper-feeding errors, scanner damage or personal injury. ● Avoid using the scanner in a dusty environment. Dust particles and other foreign objects may damage the unit.

Step 1. Installing the Paper Chute

1. Open the panel unit by pulling the lever, and get the paper chute ready.
2. Install the paper chute by aligning and inserting the tabs of the paper chute into their slots on the scanner.

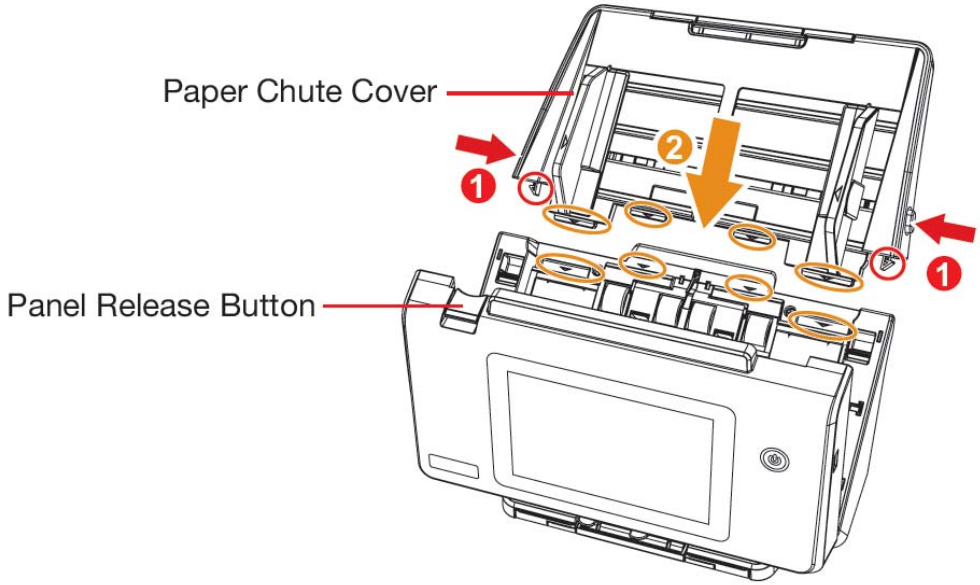

3. Close the panel unit by pushing it back down until it snaps back into place.

Step 2. Connecting the Scanner

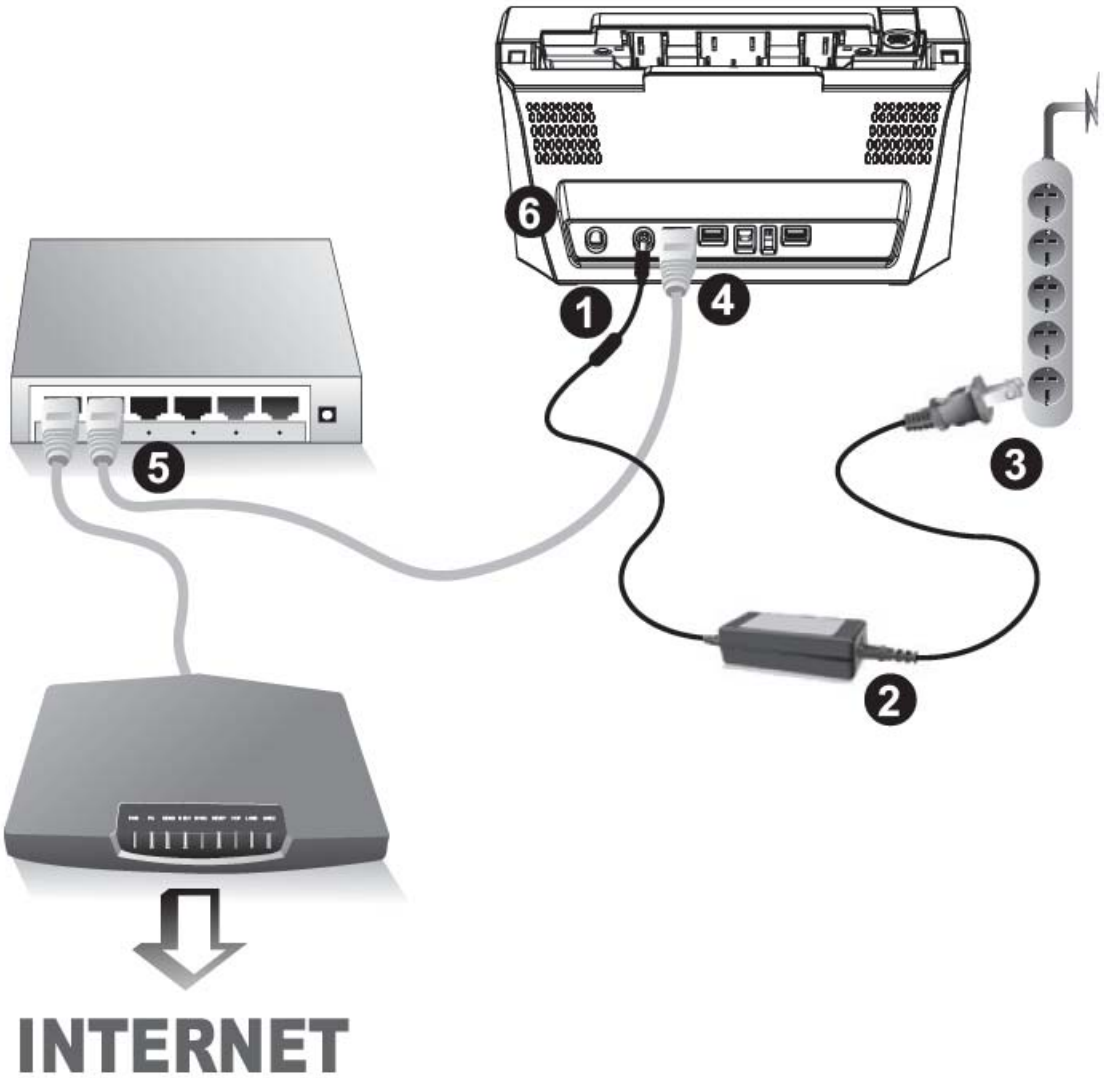

Attention	Please make sure the scanner is turned OFF before you plug or unplug the scanner power adapter.

1. Plug the AC adapter into the scanner's power receptor ⊖-⊙-⊕.
2. Attach the power cable to the AC adapter.
3. Plug the other end of the AC adapter into a standard AC power outlet.
4. (Optional) Plug the end of the Ethernet cable[2] to the Ethernet port at the rear of the scanner.
5. (Optional) Plug the other end of the Ethernet cable[3] to an available port on the Ethernet hub[4].
6. Switch on the scanner power.

[2] Can also connect without the Ethernet, by going wireless.
[3] Can also connect without the Ethernet, by going wireless.
[4] Accessories [e.g. hub / router / RJ45 cables] are not included.

CONFIGURING THE SYSTEM

After powering on the system, you can tap on **Configurations** > **System Settings** from the Main Menu to enter the System Settings interface.

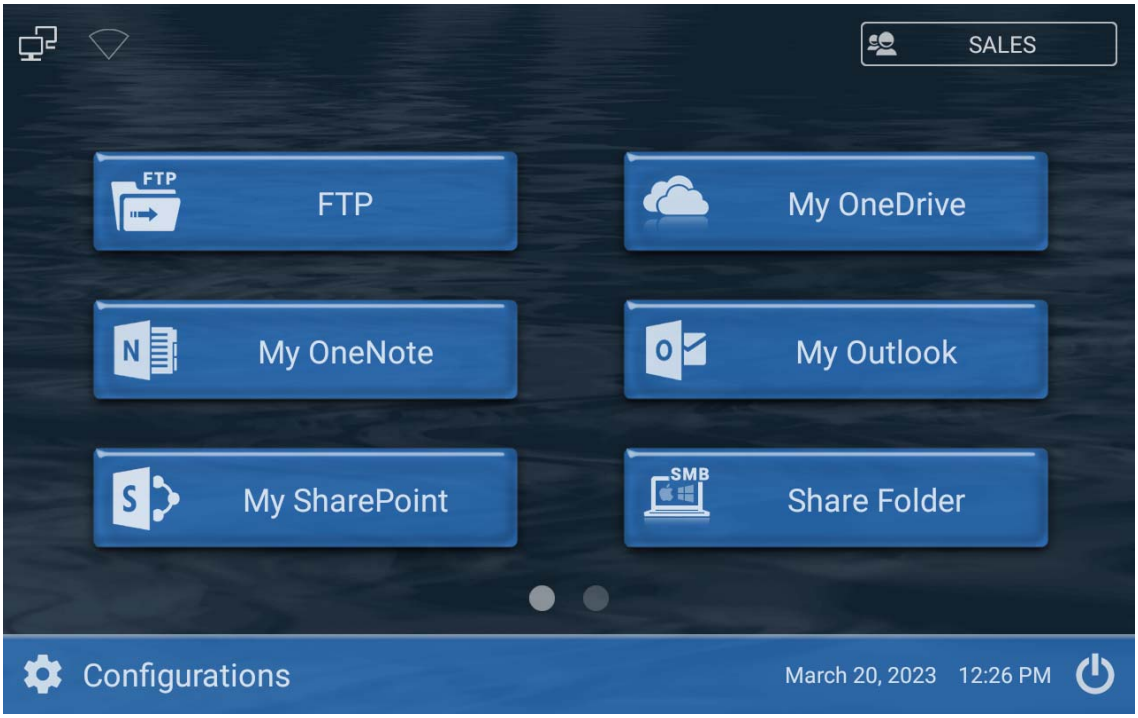

JOB BUTTON SCAN

Tap on the desired button to scan document with the preset scan settings then save the scan file to the specific destination.

CHAPTER II. CARE AND MAINTENANCE

Your scanner is designed to be maintenance-free. However, constant care and maintenance can keep your scanner working smoothly.

CLEANING THE SCANNER

Paper powder, dust, ink and toner from paper being scanned may make the inner ADF dirty, which leads to poor image quality or document-feeding errors. How often to clean your scanner depends on the type of paper and number of pages being scanned.

Perform the following procedures to clean the scanner surface and the ADF unit. Gently wipe locations described herein. Do not rub too hard.

Warning

- Before cleaning the scanner, turn off the scanner and disconnect the scanner's power cable and Ethernet cable, and then wait a few minutes for the glass and/or the inner ADF to cool to ambient temperature.
- Wash your hands with soap and water after cleaning the scanner.

Cleaning Materials

Have the following cleaning materials ready to clean the scanner:

- **soft, dry, lint-free cloth (or a cotton swab)**
- **non-abrasive cleaner**—Isopropyl alcohol (95%). DO NOT use water.

Attention

- Alternatively you can use glass cleaner or neutral detergent for windows cleaning to clean the scanner glass.
- However, DO NOT use either of them to clean the ADF feed roller or pad module.
- Use of other cleaning materials could damage your scanner.

APPENDIX A: SPECIFICATIONS[5]

Image Sensor	CIS x 2
Light Source	LED
Optical Resolution	600 dpi
Hardware Resolution	600 x 600 dpi
Scan Modes	Color: 48-bit input, 24-bit output Grayscale: 16-bit input, 8-bit output B/W: 1-bit
ADF Capacity	1. 100 sheets (A4/ Letter, 70 g/㎡ or 18 Lbs) 2. 30 sheets (Business Cards, landscape feeding) 3. Plastic Card, Max. thickness under 1.2 mm landscape feeding 4. Passport: Less 4.0 mm (0.15 in.) thickness (including carrier sheet) Note: To prevent passport damage, please scan with carrier sheet when scanning a passport. Maximum ADF capacity varies, depending upon paper weight.
Scanning Speed	60 ppm/ 120 ipm (Color/ Gray/ B/W, 300 dpi, A4 Portrait)
Scanning Area (W x L)	Max: 216 x 5080 mm (8.5” x 200”) Min: 13.2 x 13.2 mm (0.52” x 0.52”)
Acceptable Paper Sizes (W x L)	Max: 244 x 5080 mm (9.65” x 200”) Min: 50.8 x 50.8 mm (2” x 2”)
Acceptable Paper Weight (Thickness)	27 to 413 g/㎡ (7.2 to 110 Lbs)
Multi-feed Detection	With ultrasonic technology
Daily Duty Scan (Sheets)	8,000
Separate Roller Lifetime (Scans)	300,000
Pick Roller Lifetime (Scans)	300,000
Friction Roller Lifetime (Scans)	100,000
Action Button	Power
Power Supply	24Vdc/2.7 A

[5] Hardware specifications may change at any time without prior notice.

Network Functions	Scan to USB Scan to FTP/SFTP/FTPS Scan to Network (SMB 2.0/3.0) Scan to SMTP Scan to SharePoint 2010/2013/2016/2019 Scan to SharePoint Microsoft 365 Scan to OneDrive for Business Scan to Outlook Scan to OneNote Online Scan to Microsoft Exchange Scan to Azure File Storage
Interface	USB 2.0 x 2
Net Weight	4.1 Kgs (9.04 Lbs)
Dimensions (W x D x H)	319.9 x 298.2 x 236.6 mm (12.59" x 11.74" x 9.32")
Operation Panel	Display: 7" 1280x800 pixels with IPS wide view multi-touch screen
Protocol	Network TWAIN Compliant TWAIN Compliant
Built-in OCR	Built-in OCR
Operating Temperature	+ 5 °C to +35°C
WiFi	WiFi 2.4GHz : 2,412 ~ 2,462 MHz (Antenna Gain : Min.:3.6 ~ Max.:3.99 dbi) WiFi 5GHz : 5,180 ~ 5,700 MHz (Antenna Gain : Min.:1.69 ~ Max.:5.89 dbi)

APPENDIX B: CUSTOMER SERVICE AND WARRANTY

Please visit our website www.plustek.com for more customer service information. For further assistance, visit our website or call our customer support phone number listed on the website. One of our representatives will be happy to assist you from Monday through Friday in office working hours.

To avoid delays, please have the following information available before calling:

- Scanner name and model number
- Scanner serial number (Located at the bottom of the scanner)
- A detailed description of the problem

SERVICE & SUPPORT INFORMATION

Where appropriate, the period of availability of spare parts and the possibilities of upgrading products information. Please ask local distributors and suppliers for spare parts information and product upgrade information.

Information requested by relevant Implementing Measure. Please ask local distributors and suppliers for the related information of Implementing Measure test report.

Do not dispose anything of products before you ask local distributors and suppliers to get correct information for decreases of environmental impact with right methods and procedures.

If you want to disposals the product and/or an accessory, please ask local distributors and suppliers to get the contact information of nearest disposal manufactures.

If you have any maintenance inquiry, please ask local distributors and suppliers to get the contact information of nearest maintenance center in order to extend the product usage life time.

If you want to maintain and clearance the product, please ask local distributors and suppliers to get the right information of nearest stores.

STATEMENT OF LIMITED WARRANTY

This Statement of Limited Warranty applies only to the options you originally purchase for your use, and not for resale, from an authorized reseller.

The manufacturer warranty includes all parts and labor, and is not valid without the receipt of original purchase. To obtain warranty service, you may contact the authorized dealer or distributor, or visit our website to check out the available service information, or send a request via E-mail for further help.

If you transfer this product to another user, warranty service is available to that user for the remainder of the warranty period. You should give your proof of purchase and this statement to that user.

We warrant that this machine will be in good working order and will conform to its functional descriptions in the documentation provided. Upon provision of proof of purchase, replacement parts assume the remaining warranty of the parts they replace.

Before presenting this product for warranty service, you must remove all programs, data and removable storage media. Products returned without guides and software will be replaced without guides and software.

This Limited Warranty service does not provide for carry-in exchange when the problem results from accident, disaster, vandalism, misuse, abuse, unsuitable environment, program modification, another machine or non-vendor modification for this product.

If this product is an optional feature, this Limited Warranty applies only when the feature is used in a machine for which it was designed.

If you have any questions about your Limited Warranty, contact the approved retailer from whom you bought the product or the manufacturer.

THIS LIMITED WARRANTY REPLACES ALL OTHER WARRANTIES, EXPRESS OR IMPLIED, INCLUDING, BUT NOT LIMITED TO, THE IMPLIED WARRANTIES OF MERCHANTABILITY AND FITNESS FOR A PARTICULAR PURPOSE. HOWEVER, SOME LAWS DO NOT ALLOW THE EXCLUSION OF IMPLIED WARRANTIES. IF THESE LAWS APPLY, THEN ALL EXPRESS AND IMPLIED WARRANTIES ARE LIMITED IN DURATION TO THE WARRANTY PERIOD. NO OTHER WARRANTIES APPLY AFTER THAT PERIOD.

Some jurisdictions do not allow limitations on how long an implied warranty lasts, so the above limitation may not apply.

Under no circumstances are we liable for any of the following:

1. Third party claims against you for losses or damages.
2. Loss of, or damage to, your records or data; or
3. Economic consequential damages (including lost profits or savings) or incidental damages, even if we are informed of their possibility.

Some jurisdictions do not allow the exclusion or limitations of incidental or consequential damages, so the above limitation or exclusion may not apply to you.

This Limited Warranty gives you specific legal rights, and you may also have other rights that vary from jurisdiction to jurisdiction.

FCC INTERFERENCE STATEMENT

Note: This equipment has been tested and found to comply with the limits for a Class B digital device, pursuant to part 15 of the FCC Rules. These limits are designed to provide reasonable protection against harmful interference in a residential installation. This equipment generates, uses and can radiate radio frequency energy and, if not installed and used in accordance with the instructions, may cause harmful interference to radio communications. However, there is no guarantee that interference will not occur in a particular installation. If this equipment does cause harmful interference to radio or television reception, which can be determined by turning the equipment off and on, the user is encouraged to try to correct the interference by one or more of the following measures:

—Reorient or relocate the receiving antenna.

—Increase the separation between the equipment and receiver.

—Connect the equipment into an outlet on a circuit different from that to which the receiver is connected.

—Consult the dealer or an experienced radio/TV technician for help.

FCC Caution: Any changes or modifications not expressly approved by the party responsible for compliance could void the user's authority to operate this equipment.

This device complies with Part 15 of the FCC Rules. Operation is subject to the following two conditions: (1) This device may not cause harmful interference, and (2) this device must accept any interference received, including interference that may cause undesired operation.

This device and its antenna(s) must not be co-located or operating in conjunction with any other antenna or transmitter.

IMPORTANT NOTE:

FCC Radiation Exposure Statement:

This equipment complies with FCC radiation exposure limits set forth for an uncontrolled environment. This equipment should be installed and operated with minimum distance 20cm between the radiator & your body.

SIMPLIFIED EU DECLARATION OF CONFORMITY

We declares that this device is in compliance with the essential requirements and other relevant provisions of Directive 2014/53/EU.

The adapter shall be installed near the equipment and shall be easily accessible.

MANUFACTURER INFORMATION

Plustek Inc.
13F-1, No. 3, Yuan Qu Street (Building F) Taipei 115, Taiwan, R.O.C.

Accessory Manufacturer:
Adapter:
ENG Electric co., Ltd.
5F, No.536, Sec.1, Min Sheng N. Rd., Gueishan Dis., Taoyuan City 33393, Taiwan