Scanner User's Guide

plustek

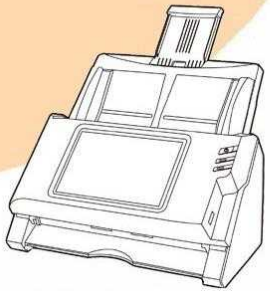

plustek eScan
A150

Trademarks

© 2016 Plustek Inc. All rights are reserved. No portion of this document may be reproduced without permission.

All trademarks and brand names mentioned in this publication are property of their respective owners.

Liability

While all efforts have been made to ensure the accuracy of all contents in this manual, we assume no liability for errors or omissions or by statements of any kind in this manual, whether such errors are omissions or statements resulting from negligence, accidents, or any other cause. The contents of this manual are subject to change without notice. We will not shoulder any legal liability, if users failed to follow the operation instructions in this manual.

Copyright

The scanning of certain documents, for example checks, bank notes, I.D. cards, government bonds, or public documents, may be prohibited by law and/or subject to criminal prosecution. We recommend you to be responsible and respectful of the copyrights laws when you are scanning books, magazines, journals and other materials.

Environmental Information

Recycle or disposal at end-of-life information, please ask local distributors or suppliers for recycle and disposal information. The product is designed and produced to achieve sustainable environmental improvement. We strive to produce products in compliance with global environmental standards. Please consult your local authorities for proper disposal.

The product packaging is recyclable.

Attention for recycling (For EU country only)
Protect your environment! This product should not be thrown into the household waste container. Please give it to the free collecting center in your community.

Table of Contents

INTRODUCTION 1
How to Use This Guide 1
Conventions of This Guide 2
A Note about Icons 2
Safety Precautions 2
Box Contents 4
Scanner Overview 5
Network Environment 6

CHAPTER I. INSTALLING THE SCANNER 7
Installing and Setting up the Scanner 7
Step 1. Installing the Paper Chute 8
Step 2. Connecting the Scanner 9
Configuring the System 10
Downloads 11
eScan Client 11
Applications 13
General 14
About 14
Wi-Fi 18
Calibration 19
Power Saving 20
History (Autofill) 21
Scan Settings 23
File Name 23
Initial Settings 25
Sending 39
Sending Settings 39
Clear All Settings 57

CHAPTER II. SCANNING 58
Preparing Documents 58
Checking Document Conditions 58
Loosening Documents 59
Placing Documents 60
Placing Business Cards 61
Placing Plastic Cards 62
Scanning Documents 64
Editing the Scanned Documents 72
Saving the Scanned Documents 77
Save to USB 78
Save to PC 79
Save to Mobile 83
Save to Mail 86
Save to FTP 90
Save to Clouds 94
Selecting Dropbox as the cloud server 98
Selecting Google Drive as the cloud server 104
For Advance Users 111
Save2Share 111
Save2FTP 114
Job Button Scan 116

CHAPTER III. CARE AND MAINTENANCE 118
Cleaning the Scanner 118
Cleaning Materials 118
Cleaning the ADF 119
Replacing Consumables 121
Replacing the Pad Module 121
Replacing the Feed Roller 122

CHAPTER IV. TROUBLESHOOTING 126
Clearing Paper Jams 126

APPENDIX A: SPECIFICATIONS 128

APPENDIX B: CUSTOMER SERVICE AND WARRANTY 130
Service & Support Information 130
Statement of Limited Warranty 130
Federal Communication Commission Interference Statement ...錯誤! 尚未定義書籤。

INTRODUCTION

Thank you for choosing us as your scanner supplier.

Like all of our products, your new scanner is thoroughly tested and backed by our reputation for unsurpassed dependability and customer satisfaction. We hope you will continue to turn to us for additional quality products as your computing needs and interests grow.

HOW TO USE THIS GUIDE

This User's Guide provides instructions and illustrations on how to install and operate your scanner.

The Introduction section of this manual describes the box contents. Before you start installing your scanner, check the box contents to make sure all parts are included. If any items are damaged or missing, please contact the vendor where you purchased your scanner or our customer service directly.

Chapter I describes how to install and configure the scanner.

Chapter II describes how to use your scanner.

Chapter III describes how to maintain and clean your scanner.

Chapter IV contains technical support information that can help you solve simple problems.

Appendix A contains the specifications of the scanner you purchased.

Appendix B contains our customer service, the limited warranty agreement and FCC statement concerning the product.

CONVENTIONS OF THIS GUIDE

Bold —Represents commands or contents on your computer screen.

ALL CAPS —Important note or first use of an important term in a chapter.

Italic —Represents buttons on your scanner OR important notes.

A Note about Icons

This guide uses the following icons to point out information that deserves special attention.

Warning	A procedure that must be followed carefully to prevent injury, or accidents.
Attention	Instructions that are important to remember and may prevent mistakes.
Information	Optional tips for your reference.

SAFETY PRECAUTIONS

Warning	Before using this device, please read the following important information to eliminate or reduce any possibility of causing damage and personal injury.

1. Usage, the product is for indoor use in dry locations. Moisture condensation may occur inside this device and cause malfunction at these conditions:

   - when this device is moved directly from a cold to a warm location;
   - after a cold room is heated;
   - when this device is placed in a damp room.

   To avoid the moisture condensation, you are recommended to follow the procedure:

   i. Seal this device in a plastic bag for it to adapt to room conditions.

   ii. Wait for 1-2 hours before removing this device from the bag.

2. Do use the AC adapter provided with the scanner. Use of other AC adapter may lead to malfunction.

3. Keep the space around the AC adapter clear in case you need to quickly unplug the AC adapter during emergencies.

4. Damaged wire could cause fire or electrical shock. Keep the power cord straight and without being twisted, bended, or scraped.
5. Unplug this device if you don't need to use for a certain period of time, such as, during night or long weekend, to avoid any risks of causing fire.
6. Do not attempt to disassemble the scanner. There is danger of an electrical shock and opening your scanner will void your warranty.
7. Be sure not to bump or knock the scanner glass as it is fragile and could break.
8. Do not subject the scanner to excessive vibration. It may damage the internal components.

BOX CONTENTS[1]

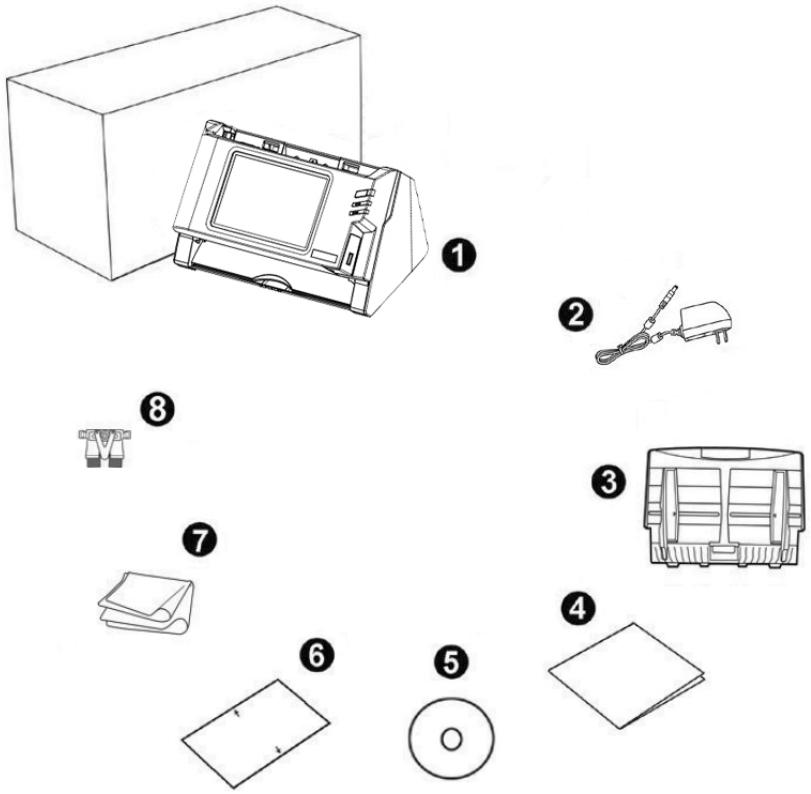

1. Scanner
2. AC Adapter
3. Paper Chute
4. Quick Guide
5. Application CD-ROM
6. Calibration Sheet
7. Cleansing Cloth
8. Pad Module

[1] Save the box and packing materials in case you need to transport this scanner in the future.

SCANNER OVERVIEW

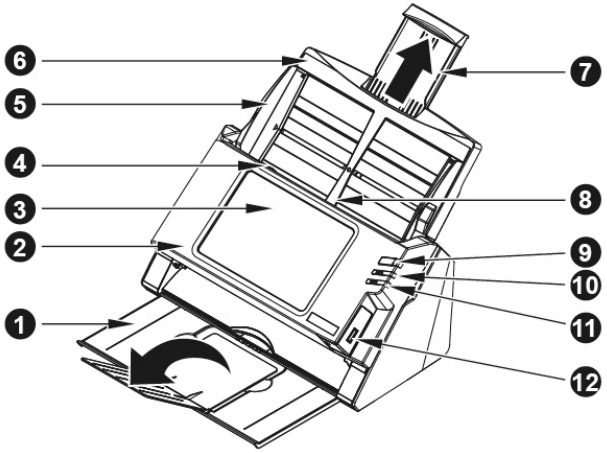

1. STACKER—Keeps the paper in place. Extend it in case of longer paper.
2. PANEL UNIT—ADF cover with the touch panel.
3. TOUCH PANEL—Use this touch panel to operate the scanner.
4. PANEL UNIT OPEN LEVER—Opens the panel unit. Pull it to open the panel unit when you need to clear paper jam or clean the scanner.
5. PAPER WIDTH SLIDER—Adjusts the paper width slider for the paper size you are using.
6. PAPER CHUTE—Helps keep the paper in place. Install the paper chute before using the scanner.
7. PAPER CHUTE EXTENSION—Extends to hold longer paper.
8. ADF (AUTOMATIC DOCUMENT FEEDER)—Automatically feeds a stack of documents for scanning.
9. SCREEN SAVER BUTTON—Press this button to enter the panel screen saver mode and you may press this button again to wake up the touch panel from power saving.
10. LED—Indicates the scanner status.
11. LED—Indicates the scanner status.
12. USB PORT—Connect a USB flash drive or other USB device.

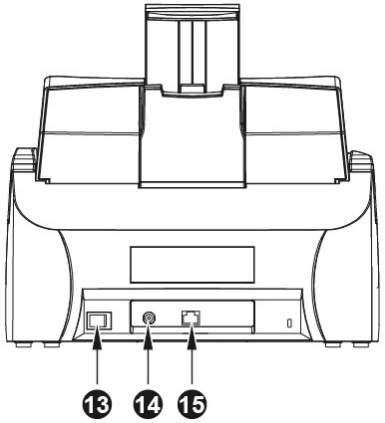

13. POWER SWITCH—Use this to turn the scanner ON or OFF.
14. POWER RECEPTOR—Connects the scanner to a standard AC power outlet by the included AC adapter.
15. ETHERNET PORT—Connects the scanner to a port on the Ethernet hub by the Ethernet cable.

NETWORK ENVIRONMENT

- Basic knowledge of network setup and configuration will be helpful for you to operate this scanner. When you are using this scanner in a corporate environment, you may need to consult your network administrator or ISP.
- The scanner requires a DHCP server. A DHCP server automatically provides all devices within a network environment with IP addresses, so there is no need to manually set an IP address for the scanner.
- Please make sure there is an active Internet connection while using the scanner. The scanner requires access to the Internet to retrieve the date and time.
- When saving scanned documents to a computer or mobile device, the scanner and the target device must be on the same segment of the network.
- The actual wireless data transmission speed varies depending on the wireless LAN environment in which you use this device. Other electrical devices (e.g. microwave oven), a large distance, obstruction, or interferences between the participating devices and the wireless access point/router can cause the data transmission to slow down or not be possible at all.

CHAPTER I. INSTALLING THE SCANNER

Before installing your scanner, please verify that you have all of the proper components. A list of the package contents is provided in the “Box Contents” section of this guide.

INSTALLING AND SETTING UP THE SCANNER

Please follow the step-by-step procedures described below to install the Plustek scanner.

Attention

Choose a Proper Site First!

- Always place your scanner on a level, smooth and strong surface before proceeding the scanner setup or any scanning task.
  Tilted or uneven surface may cause paper-feeding errors, scanner damage or personal injury.
- Avoid using the scanner in a dusty environment. Dust particles and other foreign objects may damage the unit.

Step 1. Installing the Paper Chute

1. Open the panel unit by pulling the lever, and get the paper chute ready.

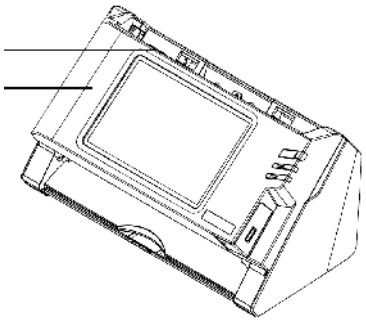

2. Install the paper chute by aligning and inserting the tabs of the paper chute into their slots on the scanner.

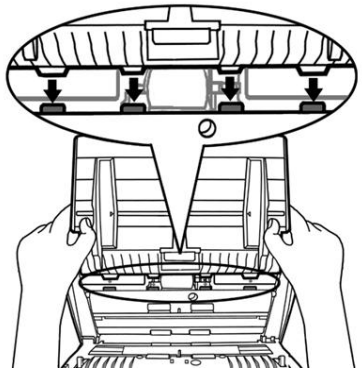

3. Close the panel unit by pushing it back down until it snaps back into place.

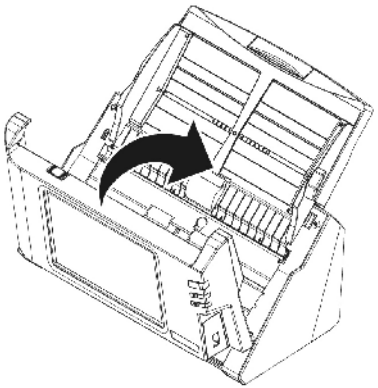

Step 2. Connecting the Scanner

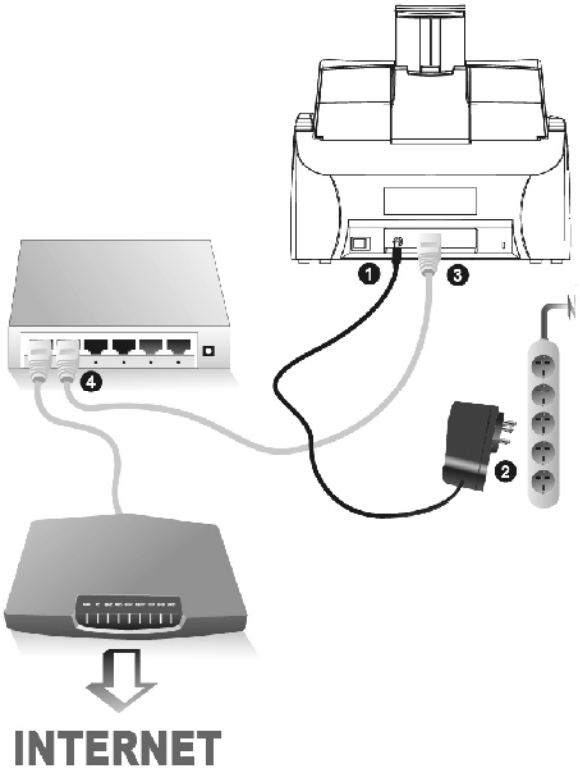

Attention	Please make sure the scanner is turned OFF before you plug or unplug the scanner power adapter.

1. Plug the AC adapter into the scanner's power receptor ⊖-●-⊕.
2. Plug the other end of the AC adapter into a standard AC power outlet.
3. (Optional) Plug the end of the Ethernet cable[2] to the Ethernet port at the rear of the scanner.
4. (Optional) Plug the other end of the Ethernet cable[3] to an available port on the Ethernet hub[4].
5. Switch on the scanner power from the rear of the scanner.

[2] Can also connect without the Ethernet, by going wireless.
[3] Can also connect without the Ethernet, by going wireless.
[4] Accessories [e.g. hub / router / RJ45 cables] are not included.

CONFIGURING THE SYSTEM

After powering on the system, you can tap on **System Settings** from the Main Menu to enter the System Settings interface. For example, you can configure the Wi-Fi settings if you want to connect wirelessly. You have to configure the outgoing mail SMTP settings if you want to use the save to mail function.

The System Settings interface contains the following sections: **Downloads**, **General**, **Scan Settings** and **Sending**.

Downloads

The Downloads section includes the following items: **eScan Client** and **Applications**.

eScan Client

To scan to PC, you must download the **eScan Client** application for **Windows** and **Mac** system from this page. Please install the **eScan Client** application on the user's computer before trying the Save to PC function. Tap the button to download the desired file to the USB flash drive.

When installing the eScan Client on Windows systems, Windows will prompt you to allow eScan Client to communicate on your network. To ensure the flawless operation of eScan Client, please make sure the **Private networks** and **Public networks** checkboxes are activated and click on the **Allow access** button.

Using the eScan Client (Windows & Mac)

Information

In the **eScan Client** interface, you can modify the **User Name**, select the desired file **Folder** and determine the action after the file is downloading.

I Windows

I Mac

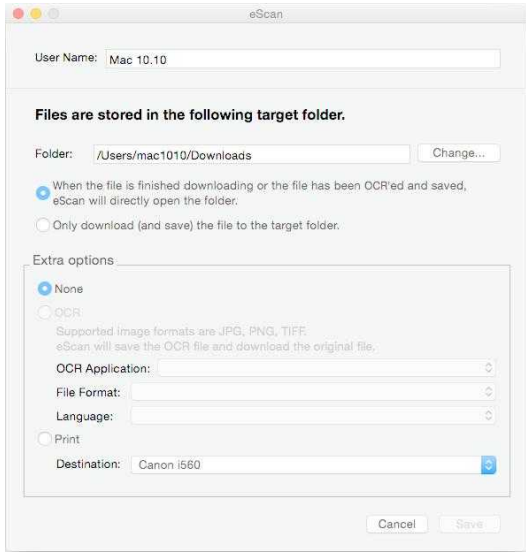

Applications

You may download the **Plustek PDF Tool (Windows)** and **Plustek TIFF Tool (Windows)** applications from this page. Tap the button to download the desired file to the USB flash drive.

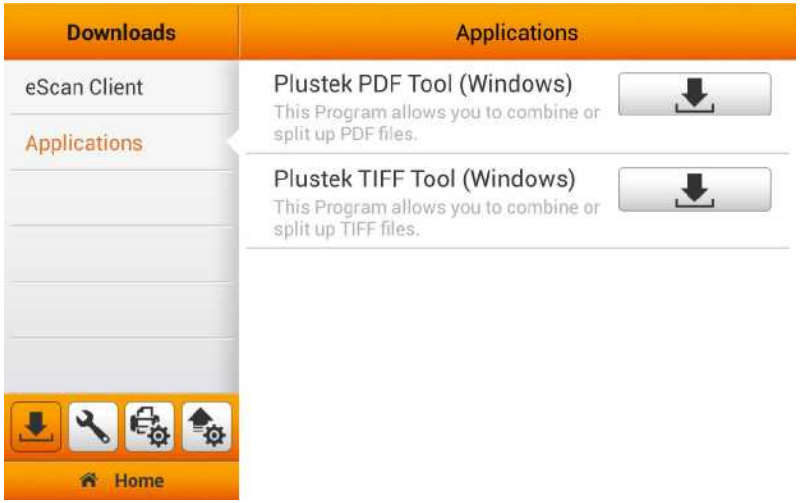

Information

Plustek PDF Tool (Windows)

This program allows you to combine or split up PDF files. You can combine several PDF files into one multi-page PDF file, or split up one multi-page PDF file into several PDF files.

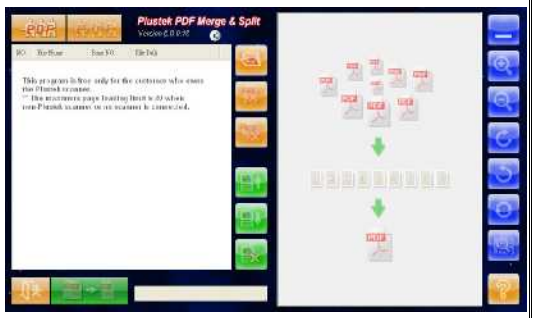

Plustek TIFF Tool (Windows)

This program allows you to combine or split up TIFF files. You can combine several TIFF files into one multi-page TIFF file, or split up one multi-page TIFF file into several TIFF files.

General

The General section includes the following items: **About**, **Wi-Fi**, **Calibration**, **Power Saving** and **History**.

About

You can set the system language, the static IP and update the driver version on this page. You may enable Hotspot to set eScan as an Access Point (AP) here.

Tap on **Language** to open the **Language** setting dialog, select the desired language and then tap the **OK** button to confirm the setting. The system will automatically restart.

Tap on to enter the **Plustek Settings** page, where you may configure advance system related settings, such as, the **Networks** setting, enabling eScan as an Access Point (AP), set a security code for the eScan, enable/disable touch sounds, the brightness of the display and much more.

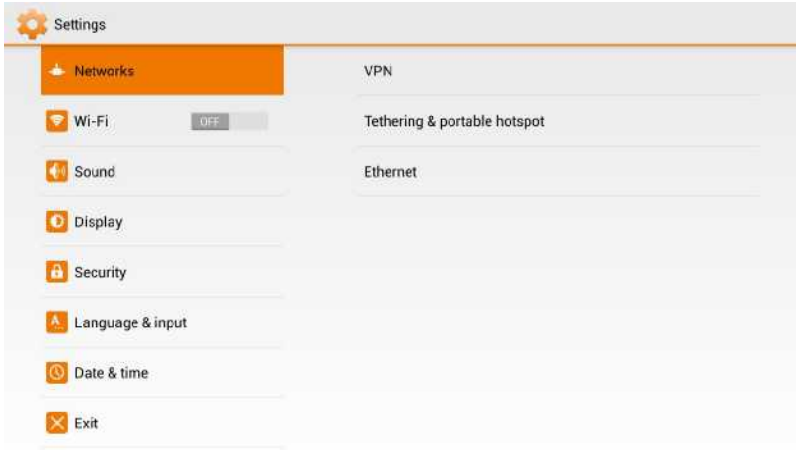

s Setting eScan as an Access Point

You may set eScan as an Access Point (AP), so that your mobile devices can connect to a wired network via eScan.

Tap on **Tethering & portable hotspot** and **Portable Wi-Fi hotspot** to activate eScan as a portable hotspot. Modify the **Network SSID** and the **Security** option if necessary. Enter the **Password**, the password should contain at least 8 digits. You may tick the checkbox of **Show password** to show the hidden password. Tap on **SAVE** to save the settings and tap on **Exit** on the left column to exit this dialog.

Information	There will be a mark showed on the upper-left corner of the main screen, you may use this eScan as a portable hotspot.

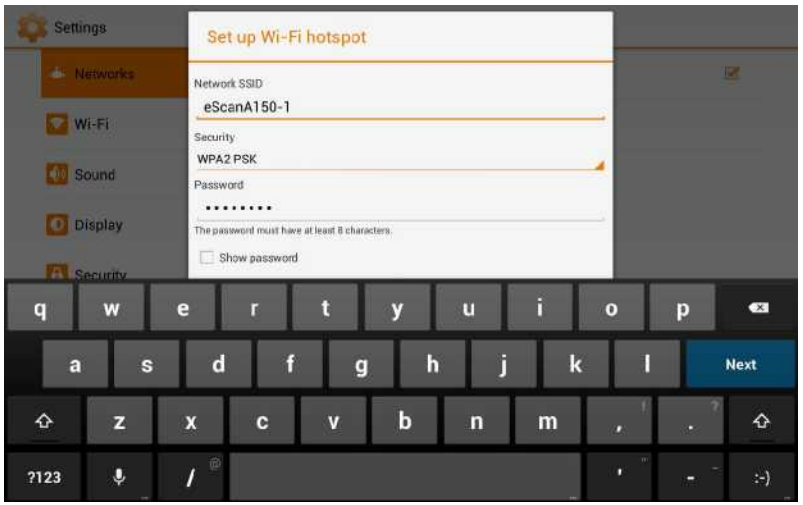

s **Static IP Settings**

Tap on **Ethernet** and **Static IP Settings** to configure static IP settings. Select the **Use static IP** option and enter the **IP address**, **Gateway**, **Netmask**, **DNS 1** and/or **DNS 2**. Contact your network administrator for assistance. Tap on **SAVE** in the upper-right corner to save the settings and tap on **Exit** on the left column to exit this dialog.

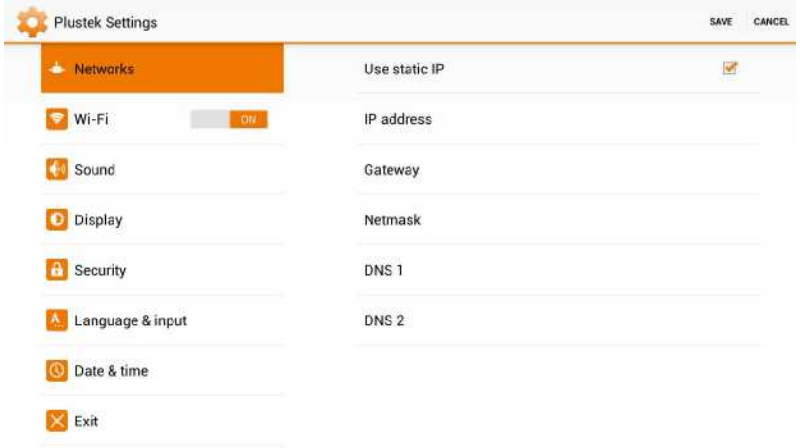

Information	To setup the duration of time before the touch screen display goes to "sleep", please refer to the **System Settings** --> **General** --> **Power Saving** for setup.

s **Security Settings**

To set up screen security, please tap on the security section. You may set screen lock by pattern or by password. NOTE: Please manage your security password/pattern carefully. If you have lost or forgotten your password/pattern, please contact original manufacturer for service. Applicable fees may apply.

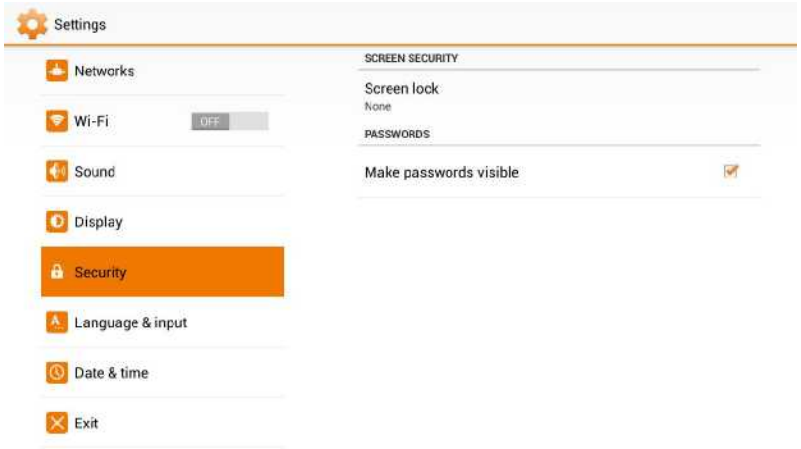

Tap on **Update** to update the driver version. Please insert the USB drive containing the update file. Tap the USB drive icon to start the update process.

Wi-Fi

You can activate the **Wi-Fi** function on this page. Select the desired Wi-Fi provider and enter the password if necessary.

Attention	Due to the various possible devices connected to the eScan on the same Wi-Fi services, eScan will NOT automatically connect to a different Wi-Fi shall it become disconnected. You must manually change connection settings if need it.

Calibration

You can perform scanner calibration on this page. Calibrate the scanner if colors appear in areas that should be white, or original document varies in color from the scanned image. By calibrating the scanner, it allows you to adjust and compensate for variations that can occur in the optical component over time by its nature. Insert the special calibration sheet into the ADF of the scanner, with an arrow toward the scanner buttons. Tap the **Start** button to start the calibration process.

Attention	Please insert the special calibration sheet included with the scanner. Alternatively you may also use any plain white sheet of paper sized in A4 (216 by 297 mm) instead; however, the calibration effect may be less good than the special calibration sheet.

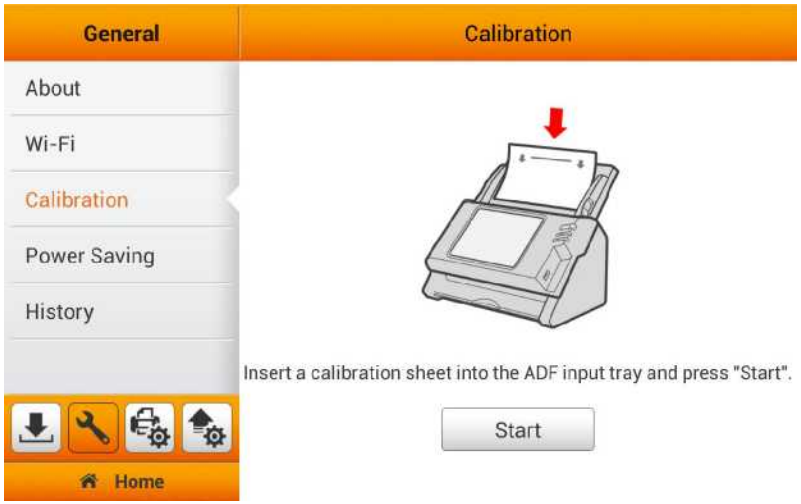

Power Saving

Attention	Strongly recommend using the function, to extend the lifespan of your touch panel.

To save power consumption, when the scanning process is finished, the scanner light source will turn itself off and the scanner will enter a lower-power mode without delay time. You can set the **Screen Timeout** time on this page.

Tap on **Screen Timeout** to open the **Screen Timeout** dialog, select the desired time period then tap the **OK** button to confirm the setting.

History (Autofill)

Enable/Disable **History** (Autofill) to set the device to stored the various account information, such as, e-mail addresses, FTP server addresses, FTP user accounts and cloud user accounts. Enabling it will allow the device to save your information every time you fill out, so the next time, you'll see a drop-down list of options to choose from. (Autofill is not available for password fields)

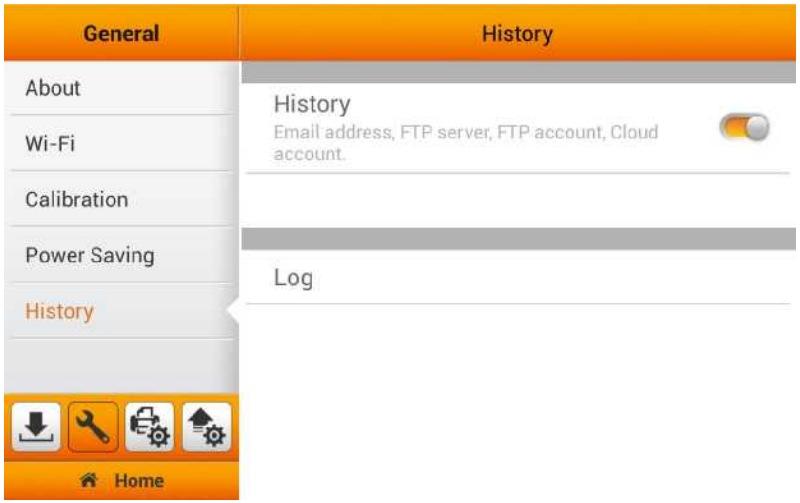

Tap on **Log** to enter the following page. The **Log** file keeps system operation records. Tap the button to download the log file in excel format.

Date-Time	USB	Email	Mobile	PC	FTP	Clouds	Files	Pages
Today							0	0
This Week							0	0
This Month						1	1	1
Three Months	2	1	1		7	26	37	37
Six Months	2	1	1		7	26	37	37
This Year	2	1	1		7	26	37	37
Five Years	2	1	1		7	26	37	37
Ten Years	2	1	1		7	26	37	37
All Files	2	1	1		7	26	37	37

Scan Settings

The Scan Settings section includes the following items: **File Name** and **Initial Settings** that allows you to set a prefix for your scanned document's name, as well as, predefine your scanner scan settings.

File Name

You may predefine a prefix name for the saved files on this page. You can see the file-naming example on the top of the screen immediately after you make any adjustments. The file name extension is automatically added according to the file format you set up. You can also rename your document during the **Save As** stage of your scanning process.

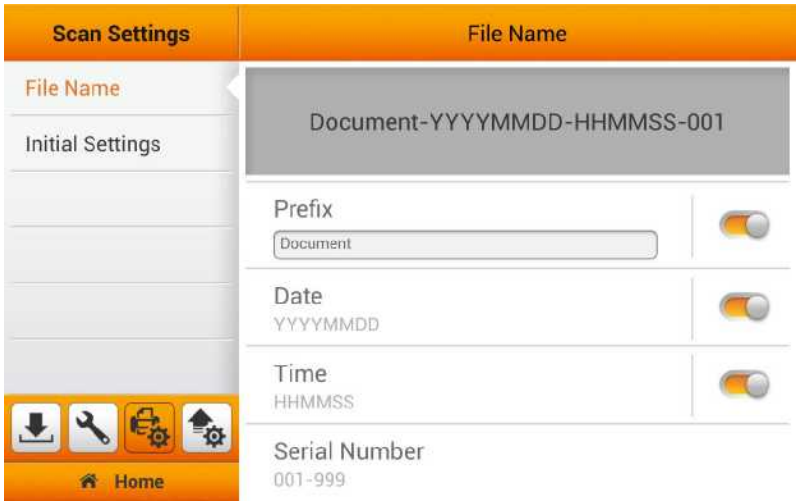

You can activate **Prefix** to display prefix in the file name. The text you enter here will become the file name prefix.

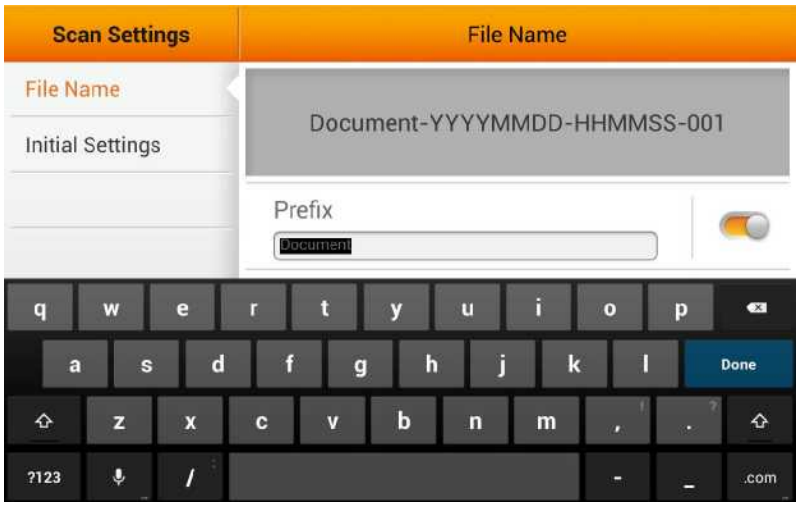

Note: Please make sure there is an active internet connection before you power on the scanner. The scanner requires access to the internet to set the device date and time.

You can activate **Date** to display the date in the file name. Select the desired format of **Date** in the following dialog.

You can activate **Time** to display the time in the file name. Select the desired format of **Time** in the following dialog.

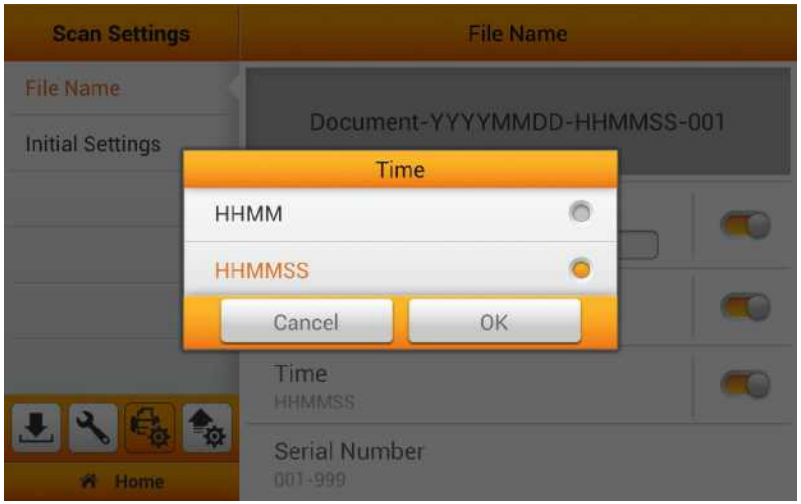

Tap on **Serial Number** to select the desired format of **Serial Number** in the following dialog.

Initial Settings

You can modify the desired scan settings on this page. The setting here will be the initial settings for the user scan interface as a shortcut key, on the Main Menu. Users will have the option to select additional settings through the **Advanced Settings**. (Please refer to the **Advanced Settings** section for more detail). If you activate the **Auto return to initial settings** function and select the desired time period, every time the scan process is completed, the system will return to these initial settings after the preset time. Choose from the available time that best fit your needs. (1, 3, 5, 10, 20 minutes)

Color Mode

You can set two color modes for user to select as a shortcut key, from the Main Menu. Users will have the option to select additional settings through the **Advanced Settings**. (Please refer to the **Advanced Settings** section for more detail). The selected result will apply to the **COLOR MODE** button in the user scan interface (Main Menu).

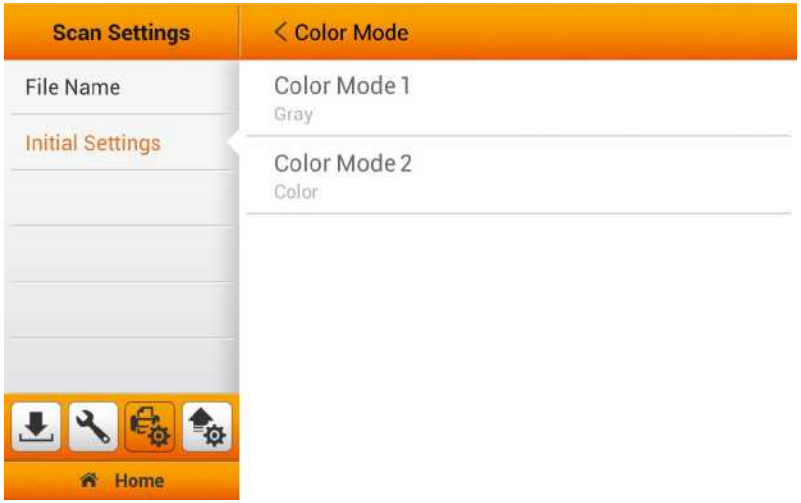

Select the desired **Color Mode** in the popup dialog. Available color modes: **Color**, **Gray** and **Black & White**. Tap the **OK** button to confirm the settings or tap **Cancel** to exit this dialog.

Format

You can set two formats for user to select as a shortcut key, from the Main Menu. Users will have the option to select additional settings through the **Advanced Settings**. (Please refer to the **Advanced Settings** section for more detail). The selected result will apply to the **FORMAT** button in the user scan interface (Main Menu).

Select the file saving format in the popup dialog. Available file formats: **PDF**, **JPG**, **TIFF**, **PNG**, **Multi-Page PDF** and **Multi-Page TIFF**. Tap the **OK** button to confirm the settings or tap **Cancel** to exit this dialog.

PDF/A

You can activate the **PDF/A** function to preserve the static visual appearance of electronic documents over time, that are self-contained, self-describing, and more device-independent. To ensure that the digital PDF documents remain readable, renderable and accessible for long -term.

QUALITY

You can set two resolutions for user to select as a shortcut key, from the Main Menu. Users will have the option to select additional settings through the **Advanced Settings**. (Please refer to the **Advanced Settings** section for more detail). The selected result will apply to the **QUALITY** button in the user scan interface (Main Menu).

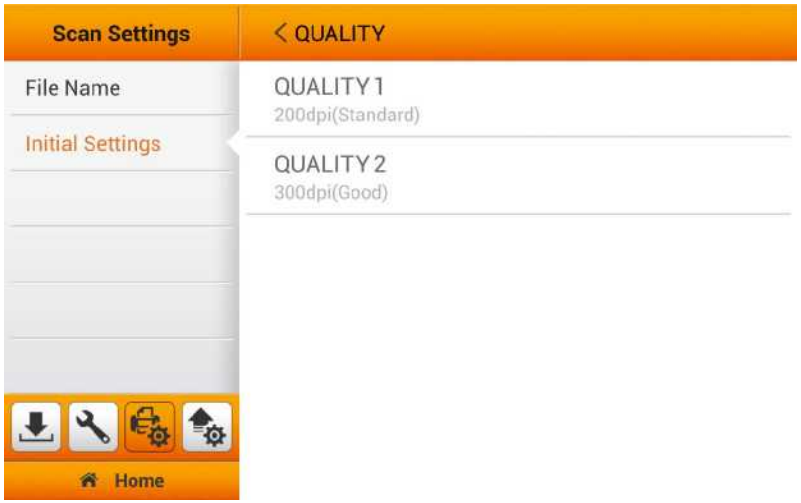

Select the desired **QUALITY** in the popup dialog. Available dpi values: **100dpi (Lower)**, **200dpi (Standard)**, **300dpi (Good)**, **400dpi (Better)**, and **600dpi (Best)**. Tap the **OK** button to confirm the settings or tap **Cancel** to exit this dialog.

Scan Mode

Select the desired **Scan Mode** in the popup dialog. The selected result will apply to the **SCAN MODE** button in the user scan interface. Available scan modes: **Simplex** and **Duplex**. Tap the **OK** button to confirm the settings or tap **Cancel** to exit this dialog.

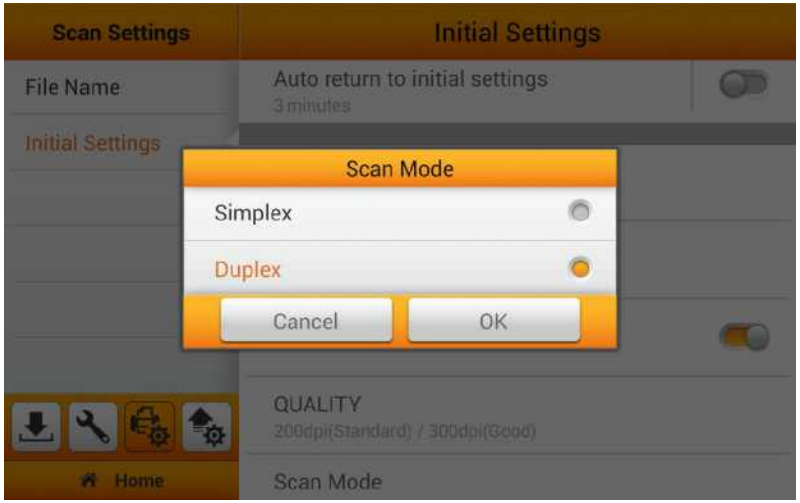

Compression

The lower the compression rate, the higher quality of the scan, resulting to a larger file. Adjust the **Compression** quality in the popup dialog. Tap the **OK** button to confirm the settings or tap **Cancel** to exit this dialog. You can also manage and adjust settings under **Advanced Settings** from the Main Menu. Please refer to the **Advanced Settings** section for more detail.

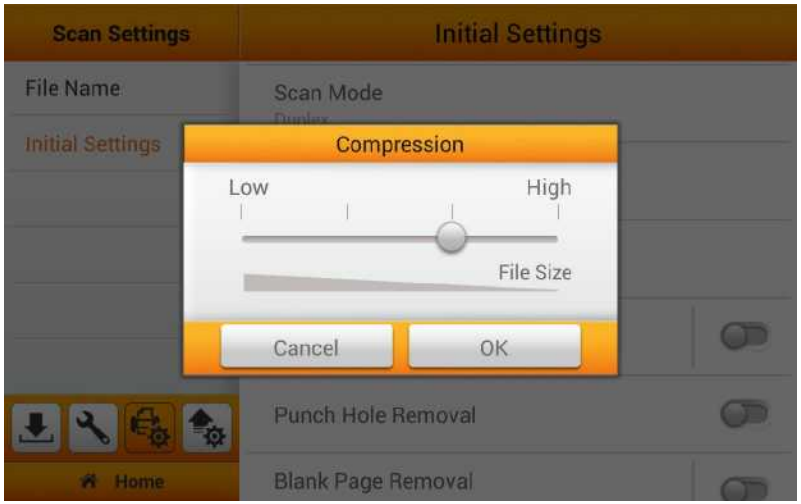

Density

Adjust the brightness, contrast and gamma levels of the image in the popup dialog to improve the visual appearance of the scanned file. Tap the **OK** button to confirm the settings or tap **Cancel** to exit this dialog. You will be able to make adjustment on the Main Menu under **Advanced Settings**.

Watermark Settings

Enable **Watermark** under the **Initial Settings** will allow you to easily **Reset to Default** under the **Advanced Settings** from the Main Menu. **To Enable/Disable Watermark, you must first set the relevant settings "HERE" and switch on the Watermark function under the 'Advanced Settings' from the Main Menu.**

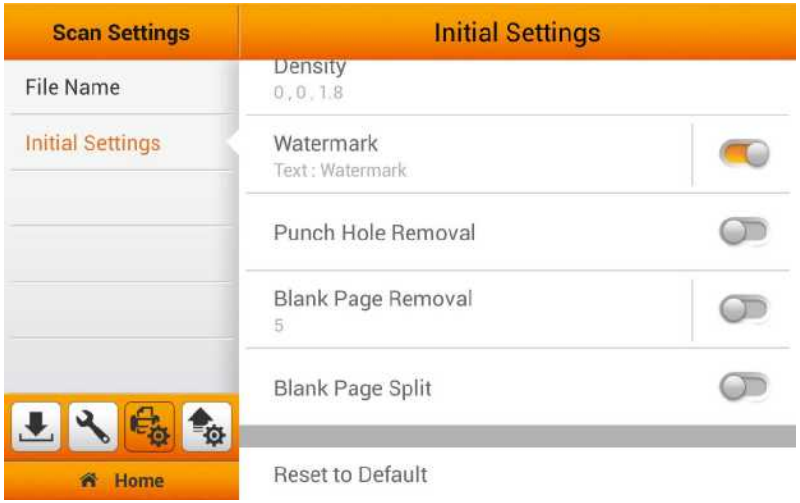

Select 'image or text' to activate the **Watermark** function. Select the type of watermark for your scanned images.

If you select **Use Image** as the **Watermark**, you have to upload the desired image and select the desired position. Tap the button to upload the desired image. Please note, when using Image file for your watermark overlay, we strongly recommend that the image be no bigger than 800x800 pixels. [Recommend size and format: 600x200pixels; PNG]

The color of the image overlay will correspond to your scanning color mode. Please adjust transparency of the image accordingly.

Note: When scanning **Black & White** we strongly recommend the transparency setting to be set at 150%.

Tap on **Position** to select the desired position. There are 9 positions to choose from. Tap the **OK** button to confirm the settings or tap **Cancel** to exit this dialog.

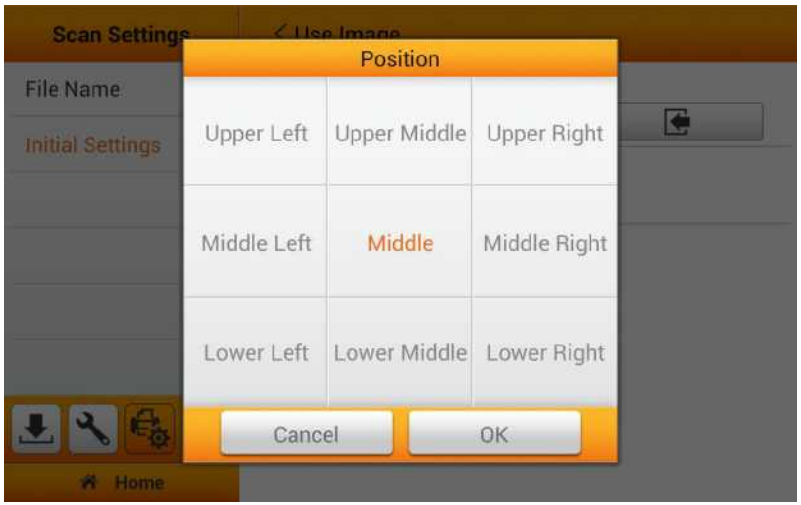

If you select **Use Text** as the **Watermark**, enter the desired text, select the desired position, and adjust the **Transparency**, **Text Size** and **Text Angle**.

Enter the desired text in the **Text** column.

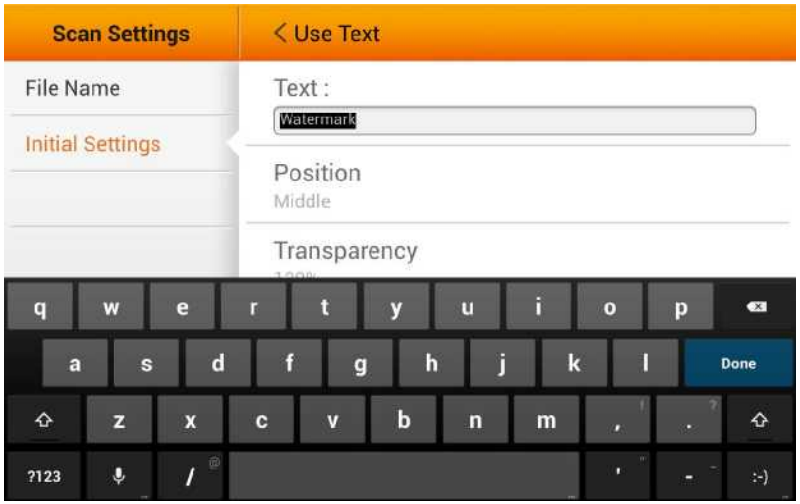

Tap on **Position** to select the desired position. There are 9 positions to choose from. Tap the **OK** button to confirm the settings or tap **Cancel** to exit this dialog.

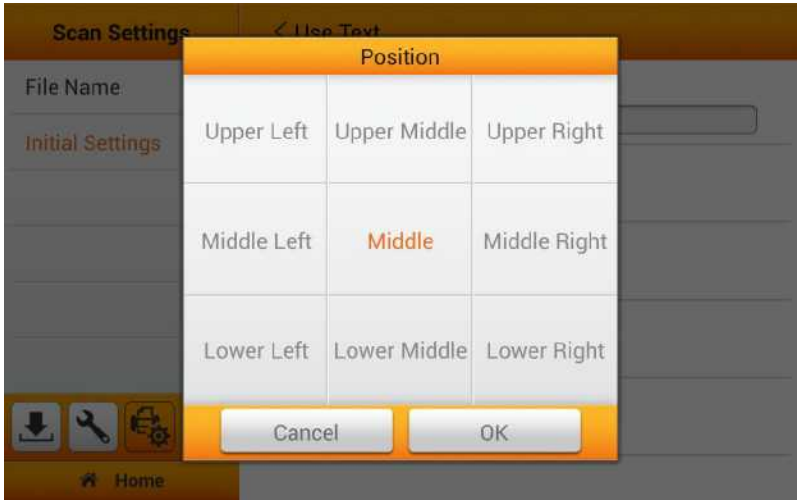

Tap on **Transparency** to adjust the transparency. Tap the **OK** button to confirm the settings or tap **Cancel** to exit this dialog.

The color of the text overlay will correspond to your scanning color mode. Please adjust transparency of the text accordingly.

Note: When scanning **Black & White** we strongly recommend the **Transparency** setting to be set at 150%.

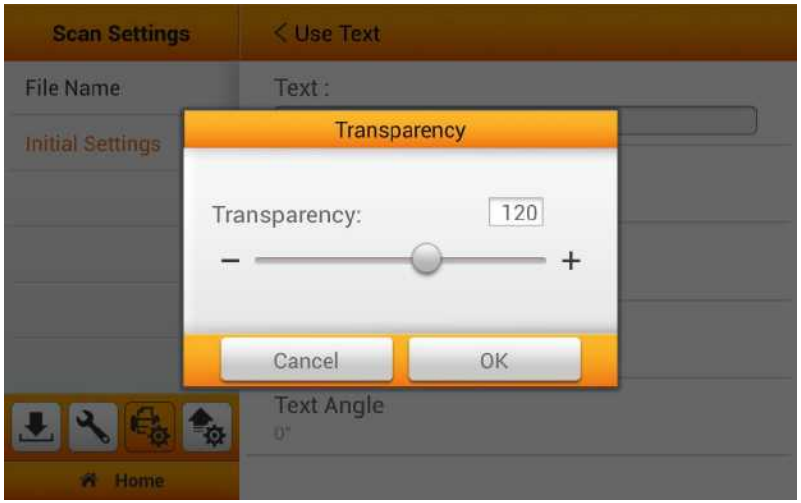

Tap on **Text Size** to adjust the text size. Tap the button to increase or decrease the values. Tap the **OK** button to confirm the settings or tap **Cancel** to exit this dialog.

Tap on **Text Angle** to adjust the text angle. Tap the button to increase or decrease the values. Tap the **OK** button to confirm the settings or tap **Cancel** to exit this dialog.

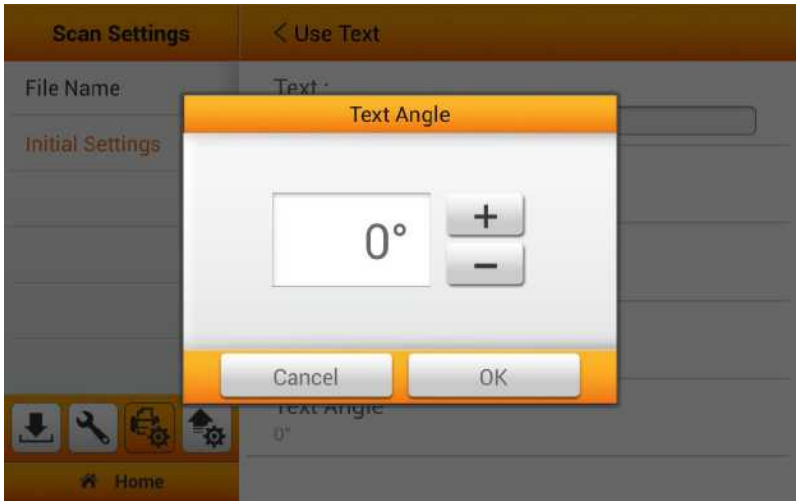

Punch Hole Removal

You can activate the **Punch Hole Removal** function. Switch on this function to remove the hole marks aligned along with the edge of the scanned document. Enable **Punch Hole Removal** under the **Initial Settings** will allow you to easily **Reset to Default** under the **Advanced Settings** from the Main Menu. **To Enable/Disable 'Punch Hole Removal', you must enable the 'Punch Hole Removal' function under the 'Advanced Settings' from the Main Menu.**

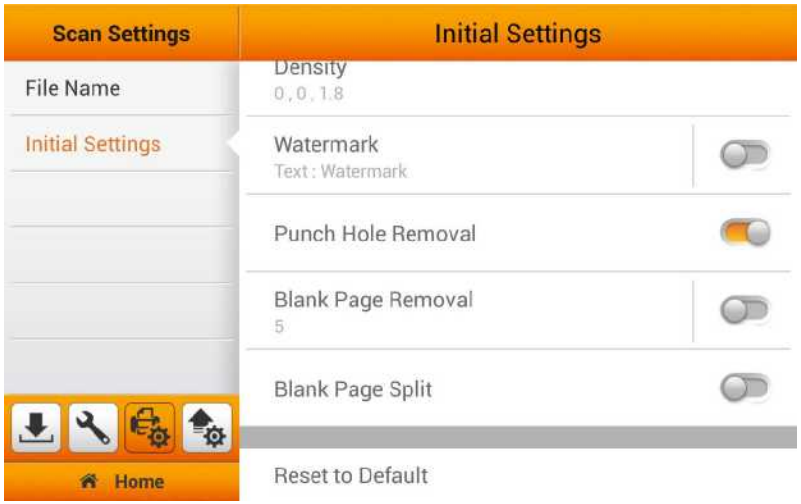

Blank Page Removal Settings

Enable **Blank Page Removal** under the **Initial Settings** will allow you to easily **Reset to Default** under the **Advanced Settings** from the Main Menu. **To Enable/Disable 'Blank Page Removal', switch on the 'Blank Page Removal' function under the 'Advanced Settings' from the Main Menu.**

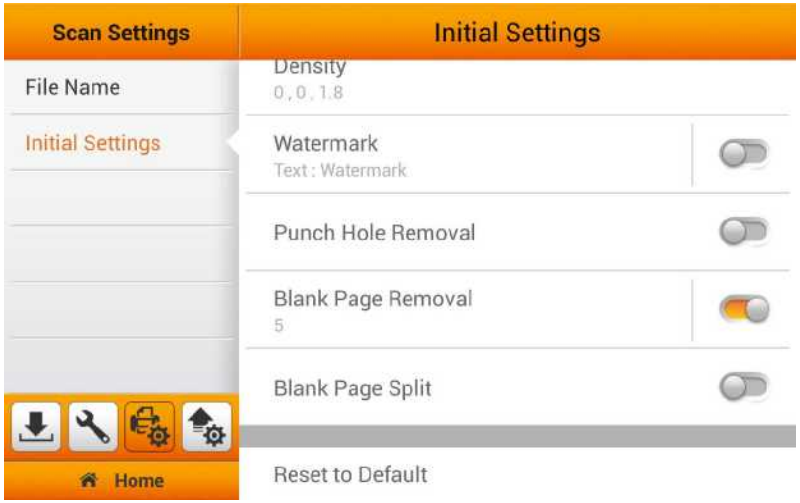

Switch on this function to remove blank pages after the document is scanned. Adjust the **Sensitivity** level in the following dialog. The higher the sensitivity, the more scanned pages will be treated as blank pages and removed. Tap the **OK** button to confirm the settings or tap **Cancel** to exit this dialog.

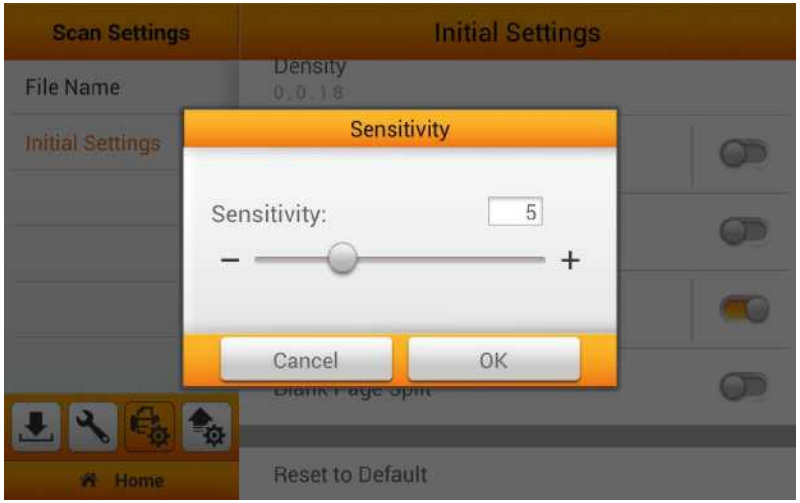

Blank Page Split

You can activate the **Blank Page Split** function. Switch on this function to split the scanned documents by inserting a blank page in between the files. This function can only be used with the Multi-Page PDF and Multi-Page TIFF formats. Enable **Blank Page Split** under the **Initial Settings** will allow you to easily **Reset to Default** under the **Advanced Settings** from the Main Menu. **To Enable/Disable 'Blank Page Split', you must enable the 'Blank Page Split' function under the 'Advanced Settings' from the Main Menu.**

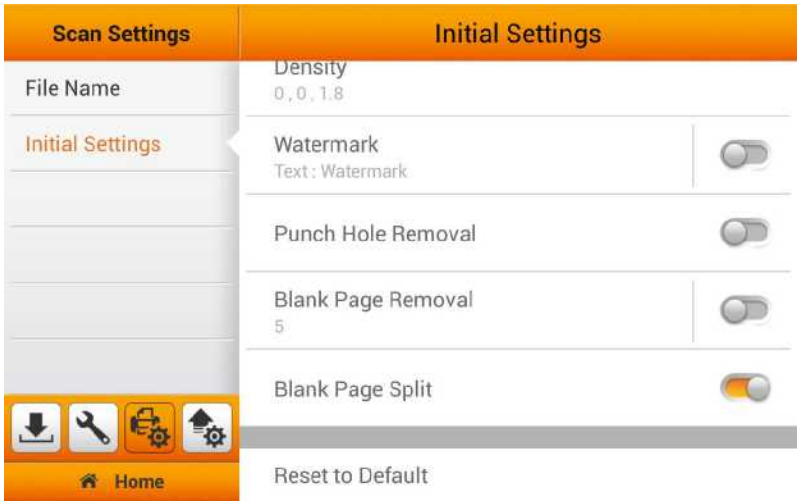

Reset to Default

Tap on **Reset to Default** to reset the scan settings to default factory settings. The following dialog opens to confirm the action.

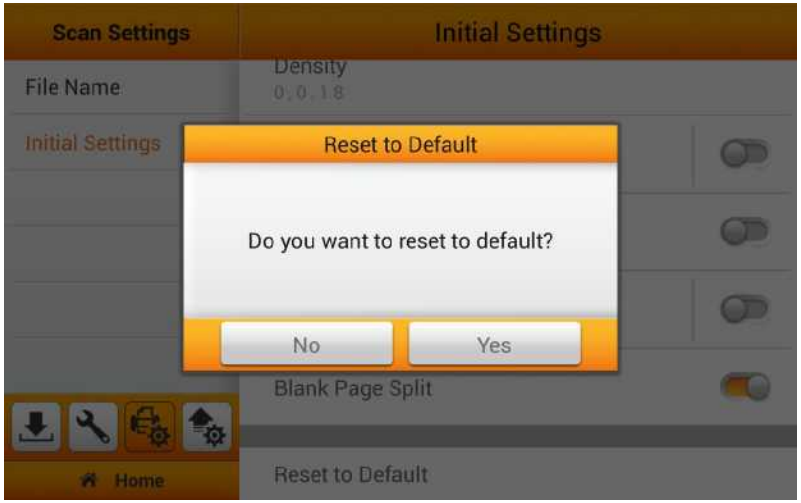

Sending

The Sending section includes the following item: **Sending Settings**, **Custom App** (Optional) and **Clear All Settings**.

Sending Settings

You can activate the desired sending destinations. Available options are: **USB**, **PC**, **Mobile**, **Mail**, **FTP**, and **Clouds**.

USB

Switch on the **USB** function to enable sending the scanned file to the USB flash drive.

PC

Switch on the **PC** function to enable sending the scanned file to the desired computer. The scanner and the target device must be on the same segment of the network.

Mobile

Switch on the **Mobile** function to enable sending the scanned file to the desired mobile device. The scanner and the target device must be on the same segment of the network.

Mail

Switch on the **Mail** function to enable sending the scanned file to the desired e-mail addresses. Tap the Set button to set the mail server. Enter **Server**, **Port**, **Account**, **Password** and select **Authentication** method, then tap the **OK** button to test the mail server setting. If the connection is successful, the mail server information will display on the top of the page. Enter the **Attachment Size(MB)** to complete the settings.

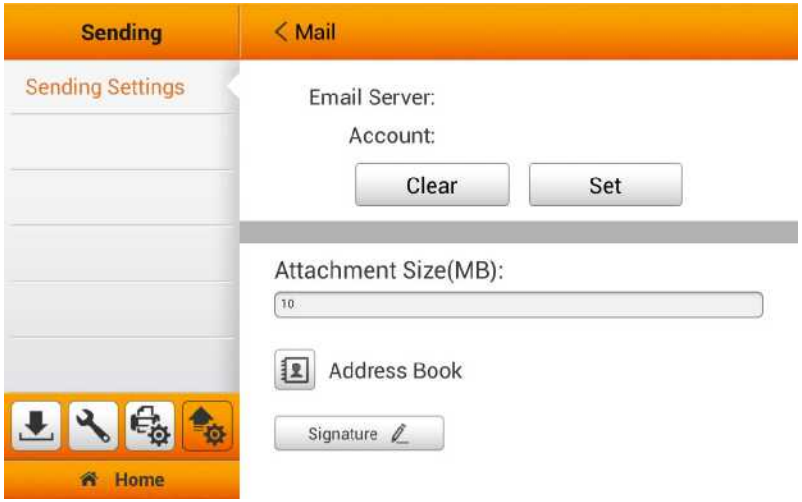

You may tap the button to edit e-mail address book. Enter the **Name** and the **Email address**, then tap the button to save the e-mail address. *You may save up to 20 e-mail addresses in this address book.* Note: You can also manage and edit the Address Book from the **Save to mail** page during your normal scan from the Main Menu.

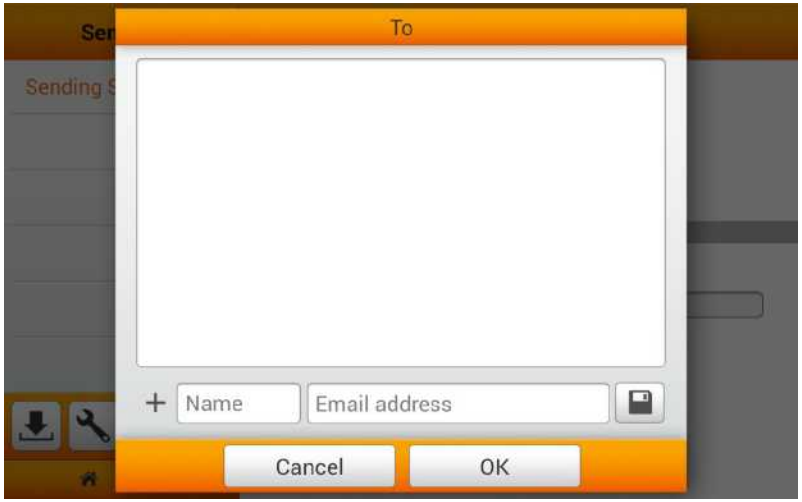

You may tap the Signature button to edit the signature. Enter the desired content in the blank. Tap the Clear All button to clear all the texts. Note: You can also manage and make adjustments to the Digital Signature from the **Save to mail** page during your normal scan from the Main Menu.

Information

Please check your Outgoing Mail Server information for these settings, here we take iCloud and Gmail as the examples.

I iCloud SMTP Mail Server Settings

- **Server**: smtp.mail.me.com
- **Port**: 587
- **SMTP Authentication Required**: Yes
  If you receive errors when using SSL/TLS, try using StartTLS instead.
- **Account**: *Your full iCloud email address (for example, emilyparker@icloud.com, not emilyparker)*
- **Password**: *Your iCloud password*

- **Gmail SMTP Mail Server Settings** (You have to set **ON** either **2-Step Verification** or **Allow less secure apps** in your Google account **Sign-in & security** settings first.)
  - **Server**: smtp.gmail. com
  - **Port**: 25 or 465 (with SSL/TLS), 587 (with StartTLS)
  - **SMTP Authentication Required**: Yes
  - **Account**: *Your full gmail address (for example, alansmith@gmail.com, not alansmith)*
  - **Password**: *Your gmail password*

FTP

Switch on the **FTP** function to enable sending the scanned file to the desired FTP server. Tap the Set button to set the FTP server. Enter **Server**, **Port**, **Account** and **Password**, then tap the **OK** button to test the FTP server setting. If the connection is successful, the FTP server information will display on the top of the page. Tap on the **Folder** field to select the desired saving folder. If the preset FTP server is the only destination, you can activate **Use this FTP as the only destination** function.

Information	The default port number for **FTP** is **21**, and the default port number for **SFTP** is **22**.

Clouds

Switch on the **Clouds** function to enable sending the scanned file to the desired cloud server.

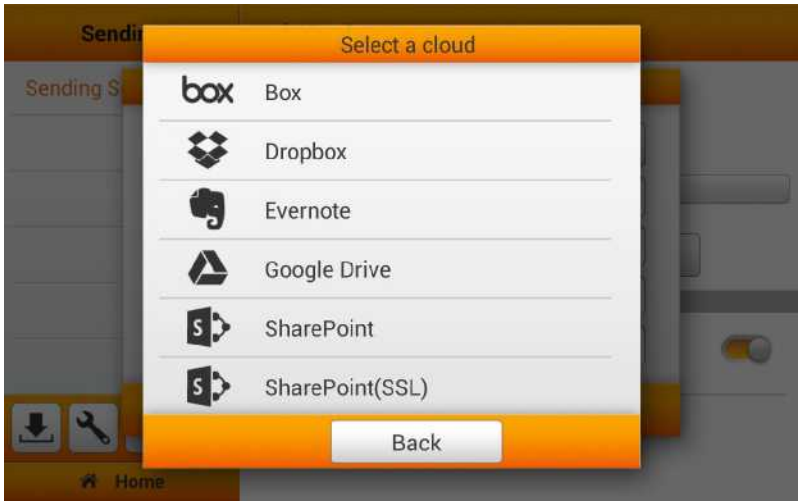

If you switch off the **Select and set up a default cloud** function, you can switch on the desired cloud servers to enable the cloud server option in the user scan interface. Available options: **Dropbox**, **Google Drive**, **Evernote**, **Box**, **SharePoint** and **SharePoint (SSL)**.

To setup a default cloud, as your only cloud destination, tap the Set button to set the cloud server.

In the **Cloud Settings** dialog, tap the Change button to select the desired cloud server.

1. Enter **Server** and **Port** if necessary.
2. Enter **Account** and **Password**.
3. Tap the **OK** button to test the cloud server setting.

If the connection is successful, the cloud server information will display on the top of the page.

Tap on the **Folder** field to select the desired saving folder. Tap the **Yes** button to confirm the settings or tap **Cancel** to exit this dialog.

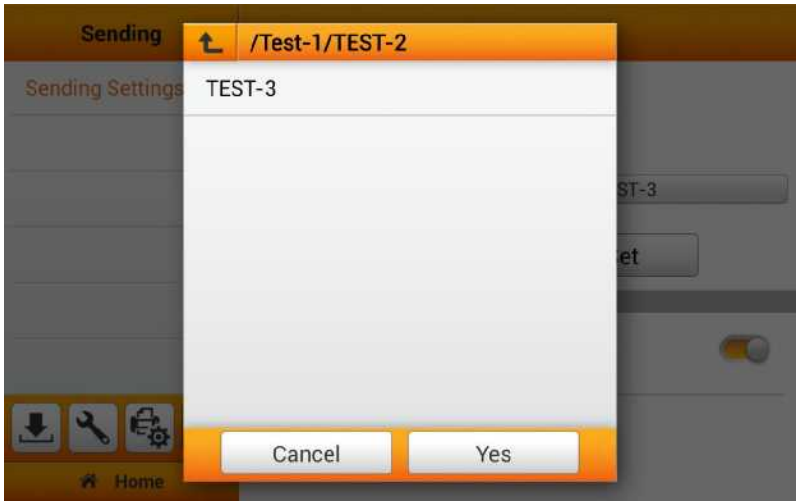

If the preset cloud server is the only destination, you can activate **Select and set up a default cloud** function. **Note: Multiple cloud accounts can be stored. Please enable the various clouds of your choice, and initiate the setup at 'Save as-Cloud' page.**

Selecting Dropbox as the cloud server

Tap the **Dropbox** to select Dropbox as the cloud server.

Tap the button to login to the Dropbox for the first time by using the eScan.

The Dropbox login dialog appears. Enter the email address and the password then tap on **Sign in**.

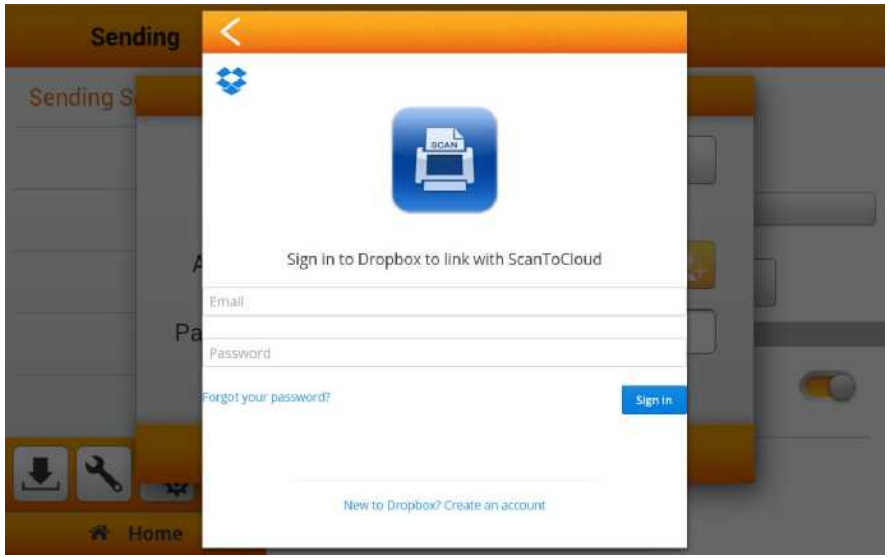

Tap on **Allow** button to allow the ScanToCloud to communicate with the Dropbox and the eScan.

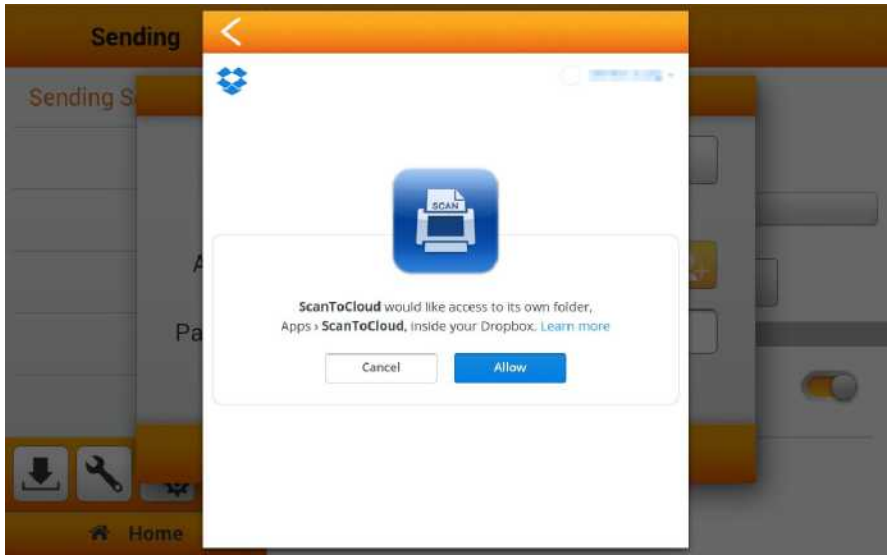

Tap on **Okay, I understand** button for the privacy attention dialog.

Enter the **Password** if it is necessary. Enter the password in **Confirm Password** to confirm.

The device allows you to store multiple accounts with selected cloud services*. If you are sharing the device, it is recommended that you setup another password to protect your account being intruded by others. The password here, does not have to be identical to your cloud account. You can skip this step, by leaving the 'optional' password blank, and tap on **OK** to continue. (You may setup the password at a later time)

Storing multiple accounts are currently solely available on Dropbox and Google Drive.

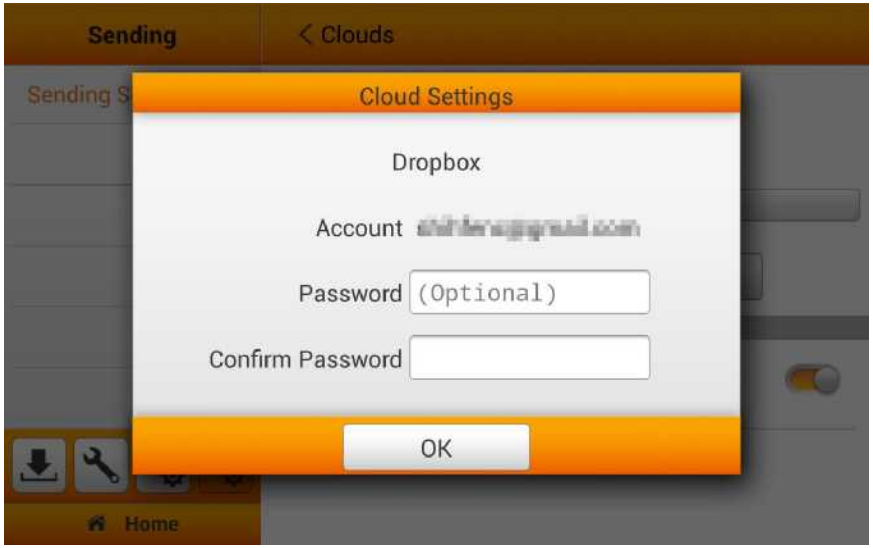

Tap the button to select account if you have already login the Dropbox by eScan. Enter the password you've already set in the previous dialog if it is necessary. Tap the **OK** button to connect to the cloud server. To add another account, simply go through the above step.

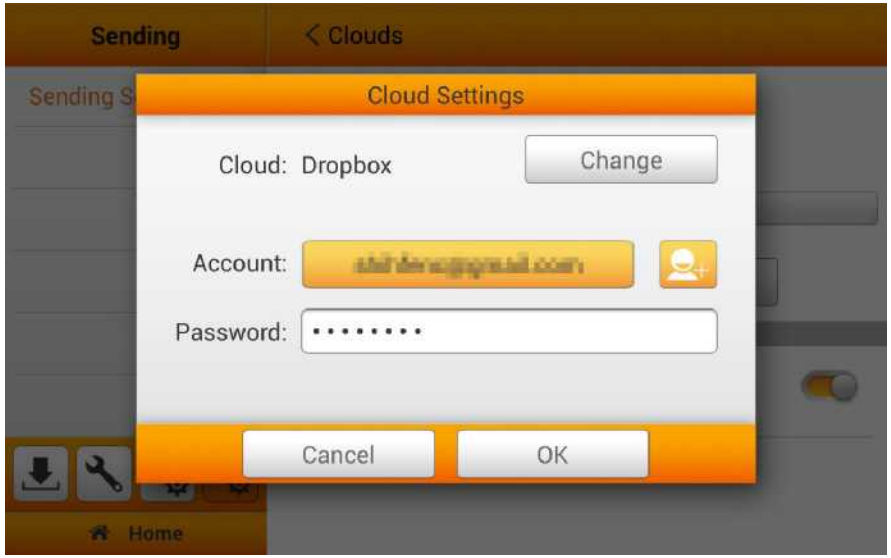

Selecting Google Drive as the cloud server

(You have to set **ON** either **2-Step Verification** or **Allow less secure apps** in your Google account **Sign-in & security** settings first.)

Tap the **Google Drive** to select Google Drive as the cloud server.

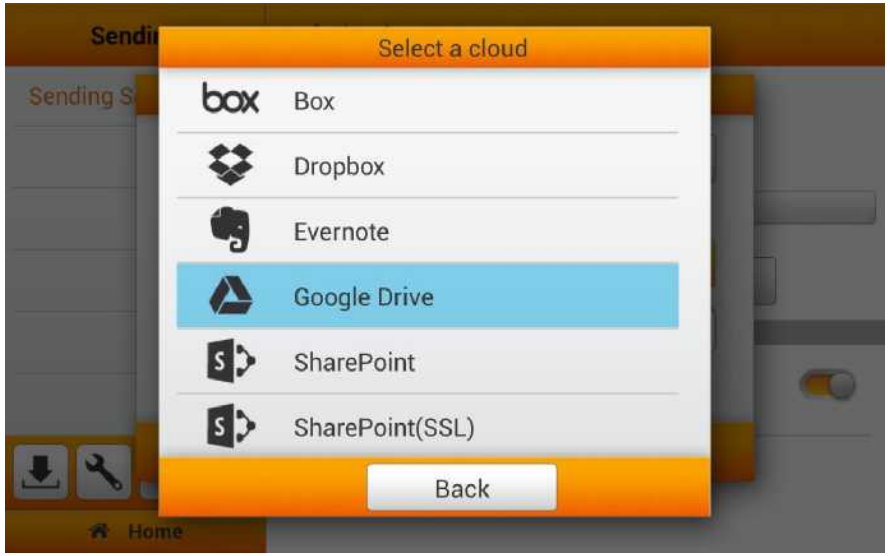

Tap the button to login to the Google Drive when setting up your Google Drive Account for the first time.

The Google login dialog appears. Enter your account then tap on **Next**.

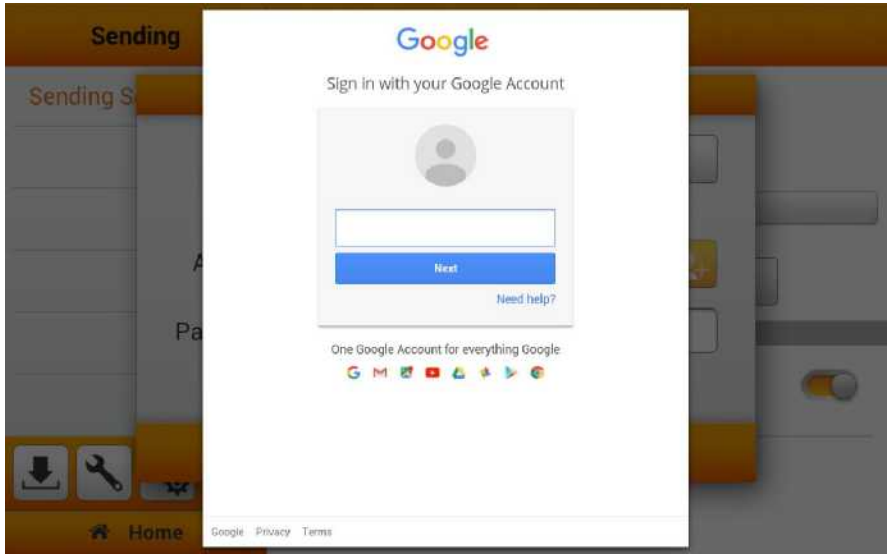

Enter your password then tap on **Sign in**.

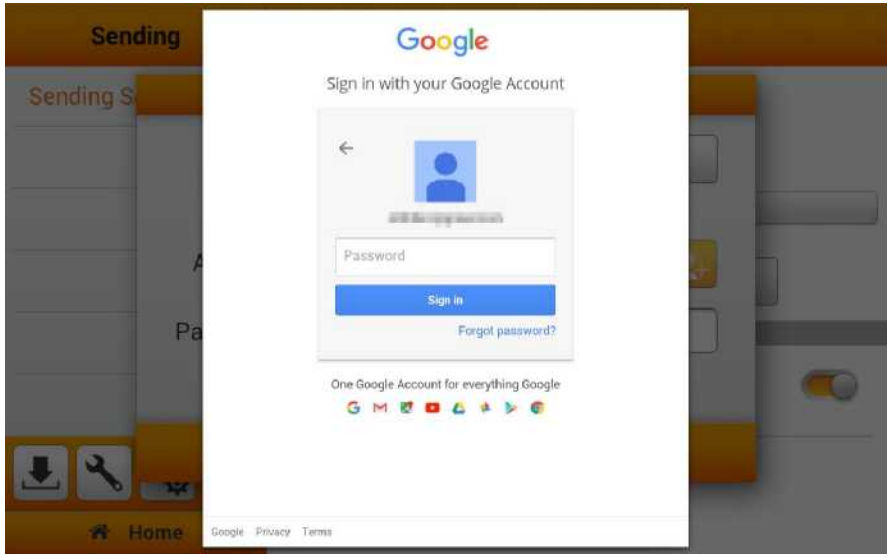

Tap on **Allow** button to allow the Plustek app to communicate with the Google Drive and the eScan.

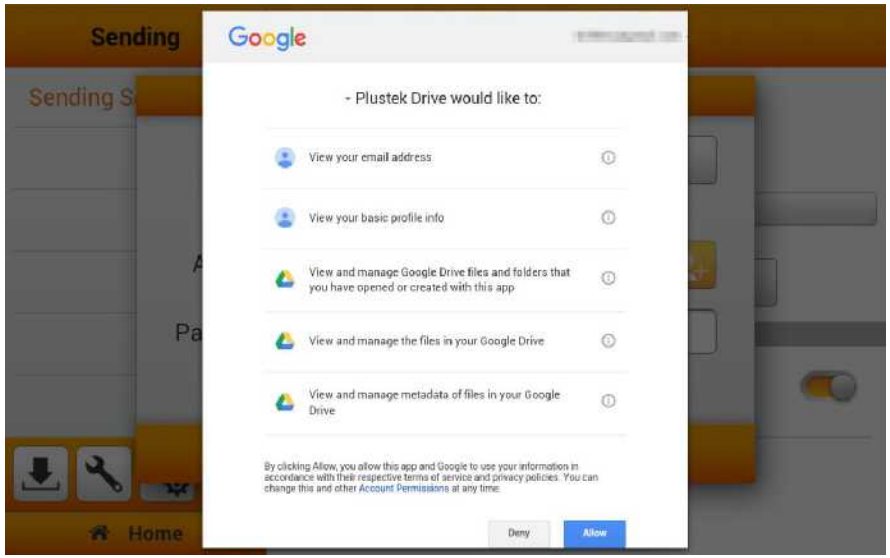

Tap on **Okay, I understand** button for the privacy attention dialog.

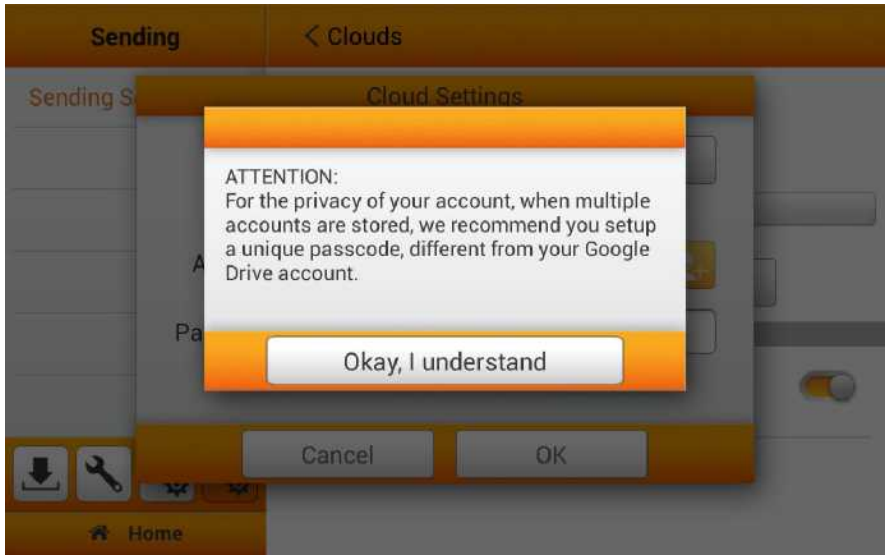

Enter the **Password** if it is necessary. Enter the password in **Confirm Password** to confirm.

The device allows you to store multiple accounts with selected cloud services. If you are sharing the device, it is recommended that you setup another password to protect your account being intruded by others. The password here, does not have to be identical to your cloud account. You can skip this step, by leaving the 'optional' password blank, and tap on **OK** to continue. (You may setup the password at a later time)

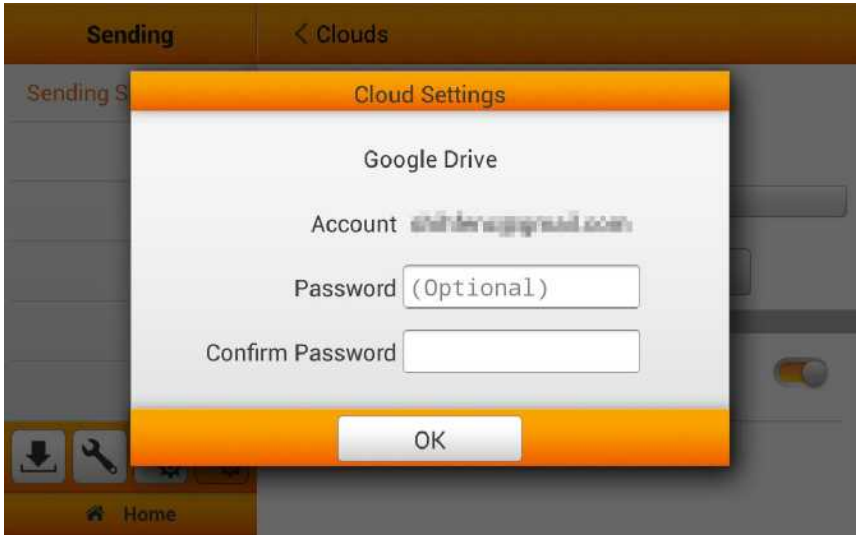

Tap the button to select account if you have already login the Google Drive by eScan. Enter the password you've already set in the previous dialog if it is necessary. Tap the **OK** button to connect to the cloud server.

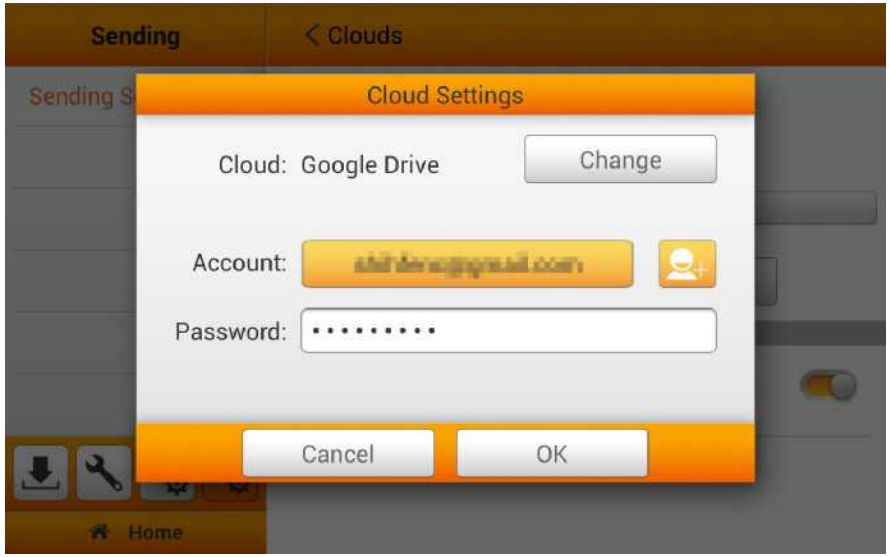

Information	For all other cloud services [Evernote, Box, SharePoint, SharePoint (SSL)], please follow the instructed guides on the touch screen interface.

Clear All Settings

Tap on **Clear All Settings** to clear all user data, reset all settings to factory settings which includes email SMTP settings, cloud settings, FTP settings and all the scan settings. Tap the **OK** button to confirm or tap **Cancel** to exit this dialog.

CHAPTER II. SCANNING

PREPARING DOCUMENTS

Proper document preparation prior to the scan can prevent paper feed errors and damages to the scanner.

- Checking Document Conditions
- Loosening Documents

Checking Document Conditions

Make sure the size and ream weight of your documents are acceptable by the scanner. Refer to “Appendix A: Specifications” of this guide for more information.

To scan multiple documents in a batch from the ADF can increase your work efficiency and make large scanning tasks easier. The ADF of this scanner accepts a variety of paper and stationery you may use in your daily work or personal life, such as:

- Normal paper whose size and ream weight meet the requirements stated in “Appendix A: Specifications” of this guide.
- Notched paper
- Coated paper (e.g., brochure)

Attention

To prevent paper feeding errors and damages to the ADF unit, strictly follow the instructions below:

- Remove all small objects e.g., paper clips, pins, staples or any other fasteners attached, before loading the paper into the ADF.
- Make sure the paper is completely flat with no creased or curled corners.
- Avoid scanning documents with pencil lead and newspaper clippings as they will make the ADF exposure glass and the inner ADF dirty. If you have to scan such paper, clean the scanner frequently (refer to “Chapter III. Care and Maintenance” of this guide for more information).

However, don't use the ADF to scan documents if they meet any of the following conditions:

- Paper lighter than 40 g/m^2 (12 lb.) or heavier than 157 g/m^2 (40 lb.)
- Paper with clips or staples attached
- Paper with inconsistent thickness, e.g., envelops
- Paper with wrinkles, curls, folds, or tears
- Paper with an odd (non-rectangular) shape
- Tracing paper
- Carbon paper, pressure sensitive paper, carbonless paper
- Items other than paper, e.g., cloth, metal foil.

Attention

- DO NOT use the ADF to scan photographic sheets or particularly valuable document originals; wrinkles or other damages can happen in case of paper feeding errors.
- DO NOT place paper with wet ink or correction fluid into the ADF. Wait few minutes for it to get dry.

Loosening Documents

Before loading documents into the ADF, loosen them as follows:

1. Fan the documents so that no two pages are sticking together.
2. Hold the documents upside down with both hands, and then gently push them onto a flat surface to align the edges of all documents.

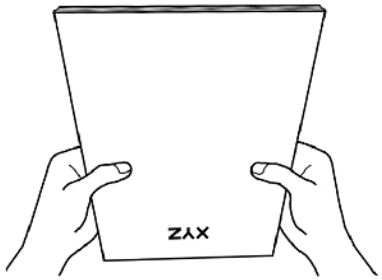

This will allow documents being fed into the ADF one at a time and prevent paper-feeding errors.

PLACING DOCUMENTS

1. Load the documents, headfirst and face down, toward the center of the ADF paper chute and all the way into the ADF until touching the bottom.

   For single-sided scans, load the documents face down so that the side to be scanned faces towards the paper chute.

   For double-sided scans, load the desired page order of documents face down so that the side to be scanned faces towards the paper chute.

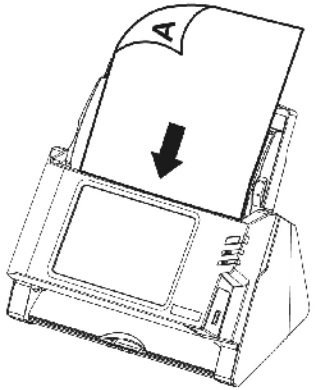

2. If you need to scan longer documents, pull out the paper chute extension and stacker to provide further support for the documents.

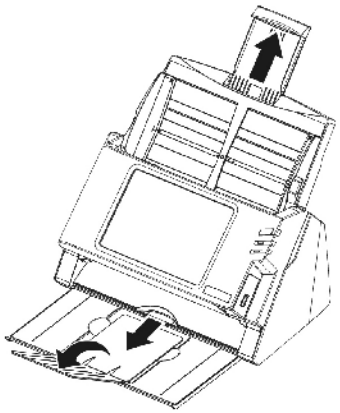

3. Adjust the paper width slider for the paper size you are using. The paper width slider should be gently touching both sides of the documents.

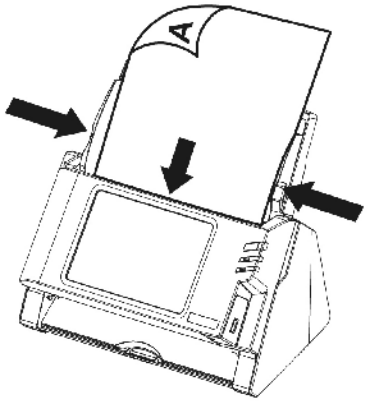

Attention	- DO NOT load more than 50 sheets of paper (70 g/m^2, 18 lb.) to the ADF. - Paper scanned from the ADF must be a minimum of 5.08 x 5.08 cm (2” x 2”, W x L). - Make sure there are no gaps between the document stack and the paper-width slider; otherwise, the scanned images can be skewed. - Although the documents should be loaded firmly in place ensuring optimum scanning accuracy, they should never be wedged in so tightly that the process of feeding them through the scanner is strained. - Do not load additional paper into the ADF while the unit is feeding and scanning.

PLACING BUSINESS CARDS

1. Horizontally load the business cards, headfirst and face down, toward the center of the ADF and all the way into the ADF until touching the bottom.

   For single-sided scans, load the business cards face down.

   For double-sided scans, load the business cards in desired order.

2. Adjust the paper width slider to the business card width. The paper width slider should be gently touching both sides of the business cards.

Attention	- Make sure the business cards you wish to scan are horizontally loaded into the ADF. - Do not load more than 30 business cards in a batch.

PLACING PLASTIC CARDS

The plastic card can be embossed credit card, driver license, ID card, insurance card, medic-care card or any membership card. Make sure to load the embossed face of the embossed card face up into the scanner. When scanning multiple embossed cards, the pad module can be removed to ease the scanning process. To remove the pad module, please refer to the following instruction:

1. Open the panel unit by pulling the panel unit open lever.

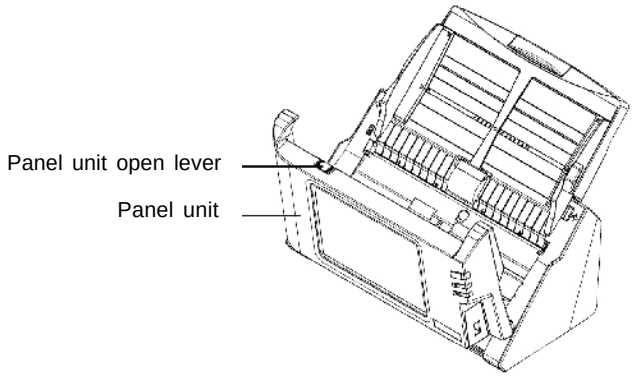

2. Remove the pad module by pinching both sides of the pad module and pull it out.

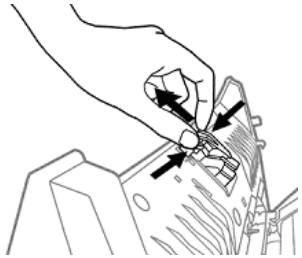

3. Close the panel unit by pushing it back down until it snaps back into place.

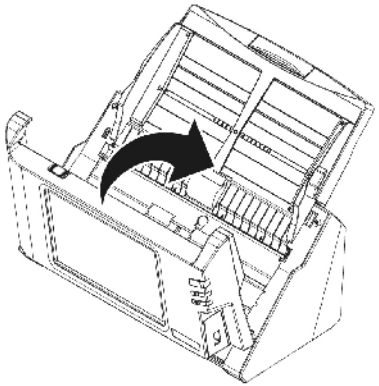

4. Horizontally load the plastic card, headfirst and face up, toward the center of the ADF.

   Make sure to load the embossed face of the embossed card face up into the scanner.

   For double-sided scans, load the card in desired order.

5. Adjust the paper width slider to the card width. The paper width slider should be gently touching both sides of the card.

Attention	❙ Make sure the plastic cards you wish to scan are horizontally loaded into the ADF. ❙ Maximum thickness of each plastic card is 1.2 mm.

SCANNING DOCUMENTS

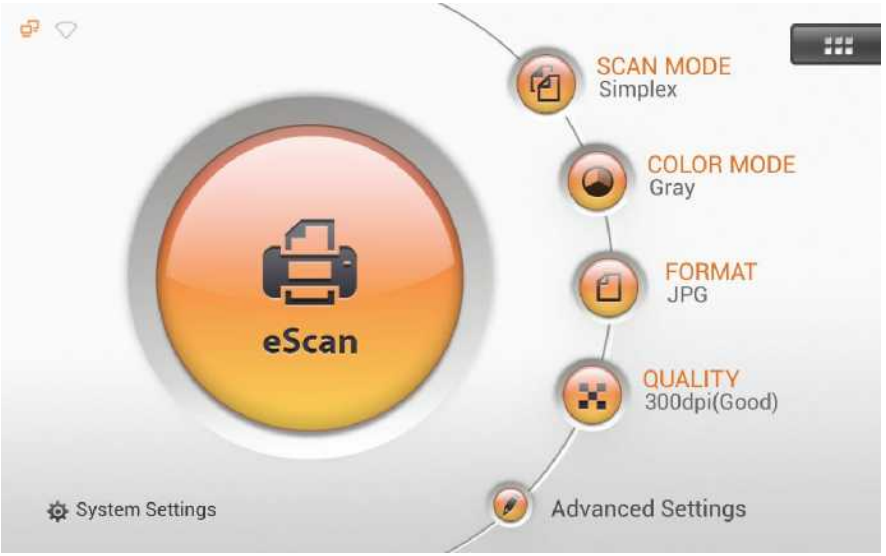

1. Tap the button to toggle the **SCAN MODE**.
2. Tap the button to toggle the **COLOR MODE**.
3. Tap the button to toggle the **FORMAT**.
4. Tap the button to toggle the **QUALITY**.
5. If necessary, you may tap on to adjust **Advanced Settings**.
6. When you are satisfied with all the scan settings, tap the button to scan the desired document.

Advanced Settings

For additional scan settings, **Advanced Settings** are available from the Main Menu, giving you quick access to other available scanning features.

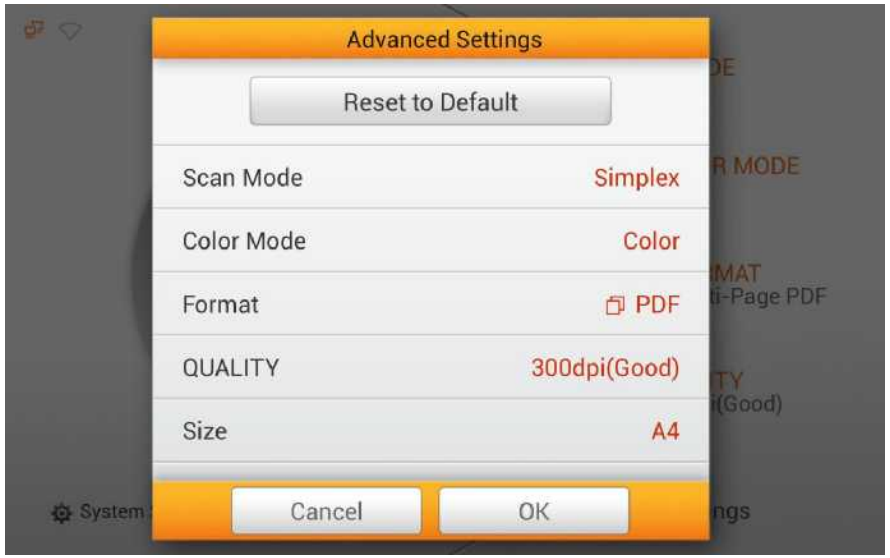

Scan Mode

Select the desired **Scan Mode** in the popup dialog. Select **Simplex** if only the front side of the documents are to be scanned. Select **Duplex** if both front and back sides are to be scanned.

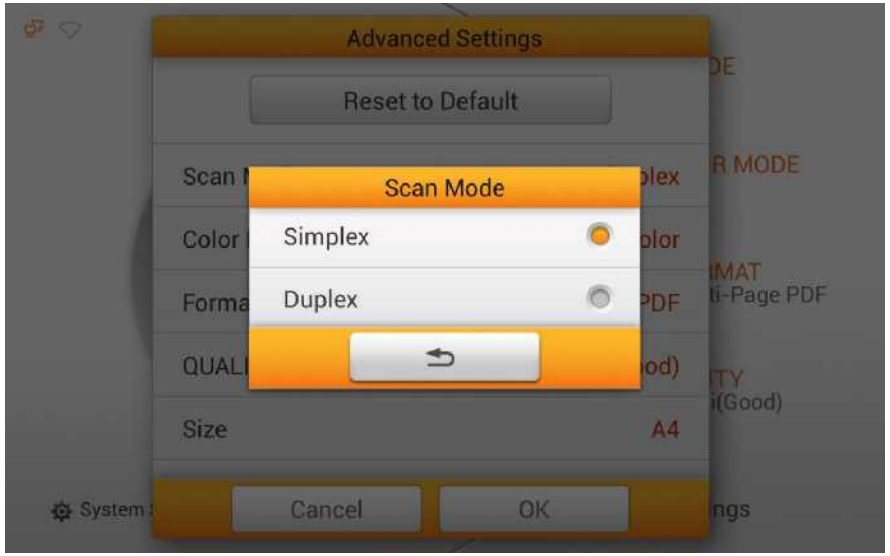

Color Mode

Select the desired **Color Mode** in the popup dialog. Set whether the document is to be scanned in **Color**, **Gray** or **Black & White**.

You may want to change **Initial Settings**, under **System Settings** -->**Scan Settings** -> **Initial Settings** if this is a regularly used scanning feature.

Format

Select the file saving format in the popup dialog. Available file formats: **PDF**, **JPG**, **TIFF**, **PNG**, **Multi-Page PDF** and **Multi-Page TIFF**. If you are scanning multiple pages of documents and would like to merge the scanned pages into one file, selecting **Multi-Page PDF** or **Multi-Page TIFF**.

If **PDF** or **Multi-Page PDF** is selected, Adobe Reader is required to view the scanned PDF created.

You may want to change **Initial Settings**, under **System Settings** -->**Scan Settings** --> **Initial Settings** if this is a regularly used scanning feature.

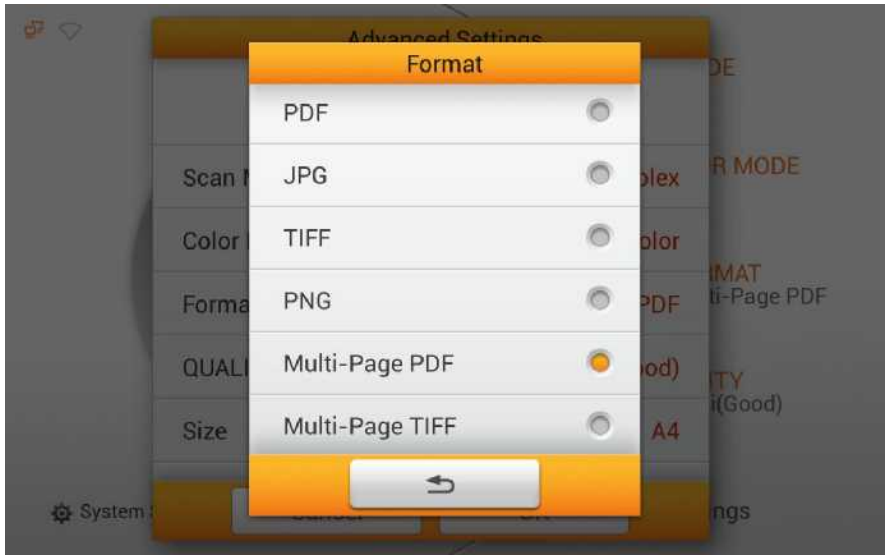

QUALITY

Select the desired **QUALITY** in the popup dialog. Available dpi values: **100dpi (Lower)**, **200dpi (Standard)**, **300dpi (Good)**, **400dpi (Better)**, and **600dpi (Best)**.

Note: The higher the resolution, the slower the scanning speed, resulting to high quality scan, but larger file size and vice versa.

You may want to change **Initial Settings**, under **System Settings** -->**Scan Settings** --> **Initial Settings** if this is a regularly used scanning feature.

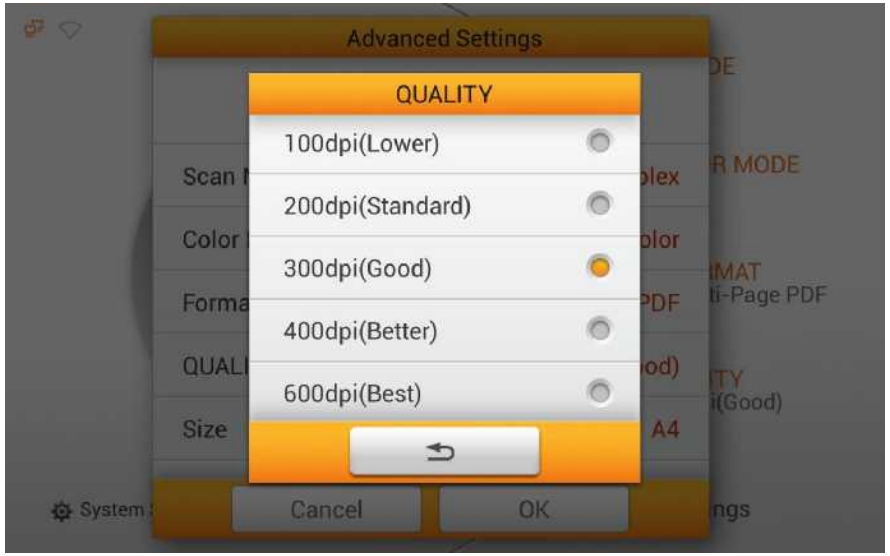

Size

Select the desired paper **Size** in the popup dialog. Available paper sizes: **Auto**, **A4**, **A5**, **B5**, **Letter (8.5” x 11”)**, **Legal (8.5” x 14”)**, **Invoice (5.5” x 8.5”)**, **Oficio (8.5” x 13”)** and **Long Paper (21cm x 41cm)**.

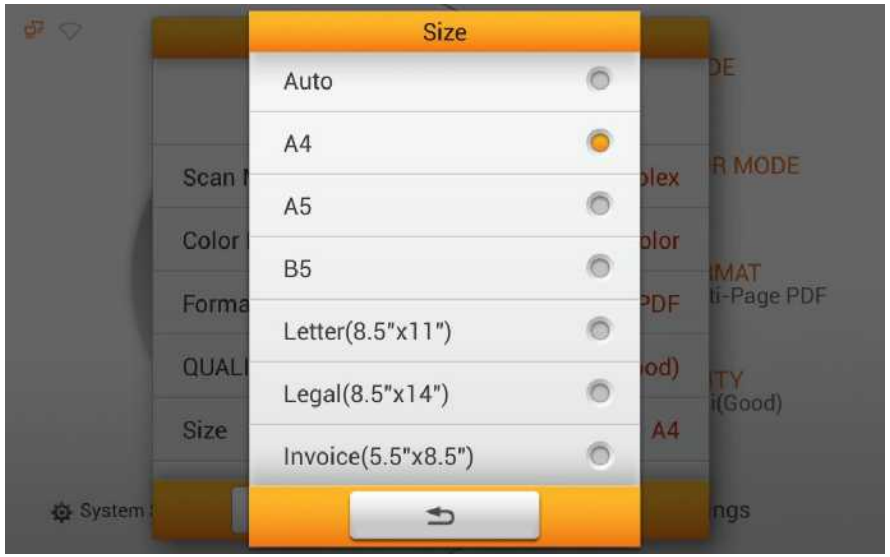

Compression

The lower the compression rate, the higher quality of the scan, resulting to a larger file. Adjust the **Compression** quality in the popup dialog. Tap the **OK** button to confirm the settings or tap **Cancel** to exit this dialog.

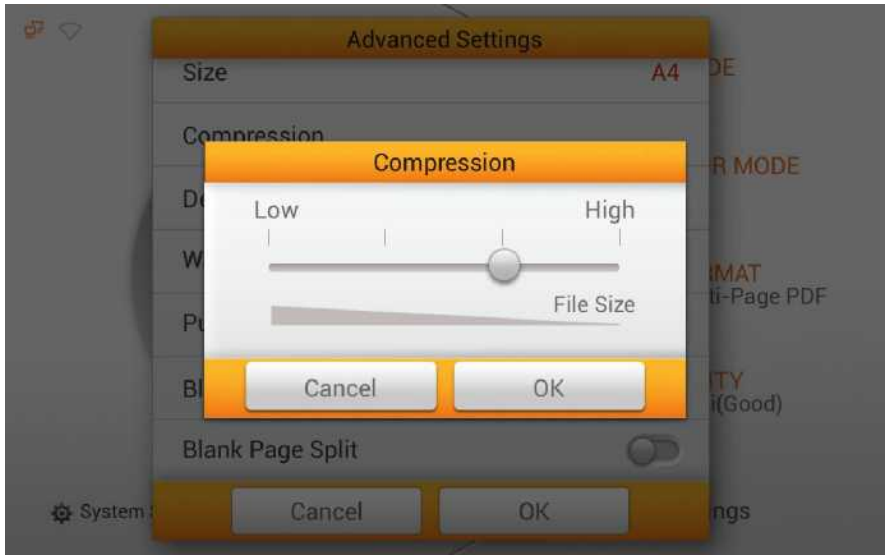

Density

Adjust the brightness and contrast levels of the image to improve the visual appearance of the scanned file. Tap the **OK** button to confirm the settings or tap **Cancel** to exit this dialog.

Watermark

Switch on or off the **Watermark** function. Switch on this function to add watermark on the scanned images.

You must first set the relevant settings under **System Settings** -->**Scan Settings** --> **Initial Settings** and switch on the Watermark function "HERE".

Punch Hole Removal

Switch on or off the **Punch Hole Removal** function. Switch on this function to remove the hole marks aligned along with the edge of the scanned document.

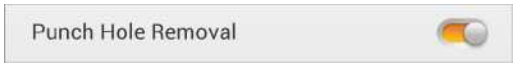

Blank Page Removal

Switch on or off the **Blank Page Removal** function. Switch on this function to remove blank pages after the document is scanned.

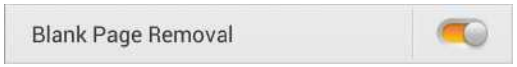

Adjust the **Sensitivity** level in the **Sensitivity** dialog. The higher the sensitivity, the more scanned pages will be treated as blank pages and removed.

Blank Page Split

Switch on or off the **Blank Page Split** function. Switch on this function to split the scanned documents by inserting a blank page in between the files. This function can only be used with the Multi-Page PDF and Multi-Page TIFF formats.

Reset to Default

Tap on this button to reset the scan settings to your initial settings.

EDITING THE SCANNED DOCUMENTS

The scanned image will be displayed on the screen. All scanned images are displayed on the screen as thumbnails; you may view up to 8 miniatures of the scanned images at the same time. The number displayed on the upper-right corner of each image is the sequential number given to every image according to the scanning order. This mode is especially useful when you want to search a particular image, or check the images roughly to decide if rescanning certain pages is necessary.

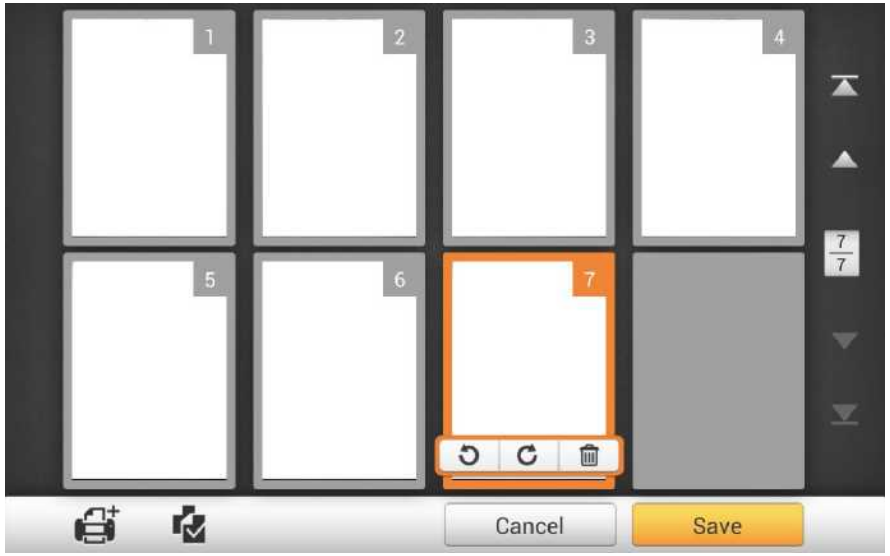

When you select a desired scanned image on the screen, shortcuts allow you to delete or rotate the selected image.

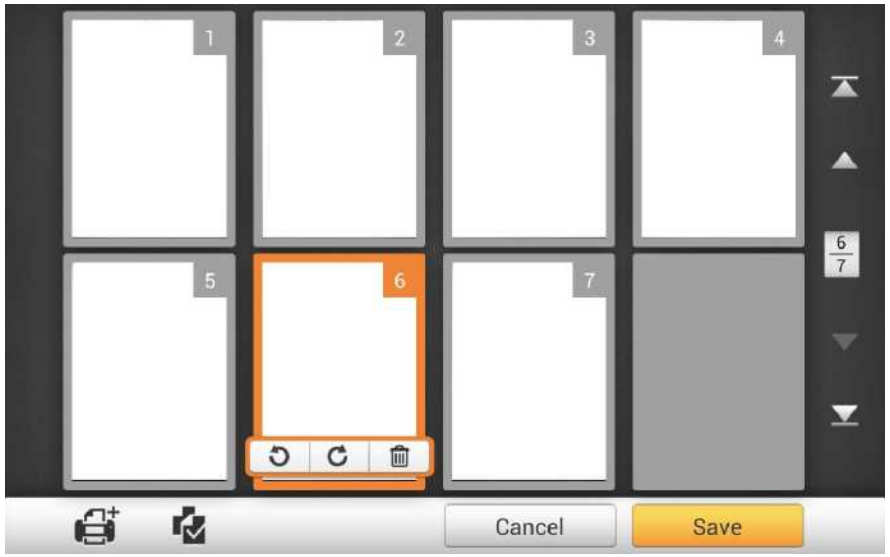

In this display mode, you can select the desired scanned image from the miniatures to re-arrange the image order. You can manually transpose the selected image within the same scan task by drag-and-drop operation. Select a single image on the screen by pointing on that thumbnail. Drag the selected image to the desired place. The selected image is moved to the new place and automatically renumbered.

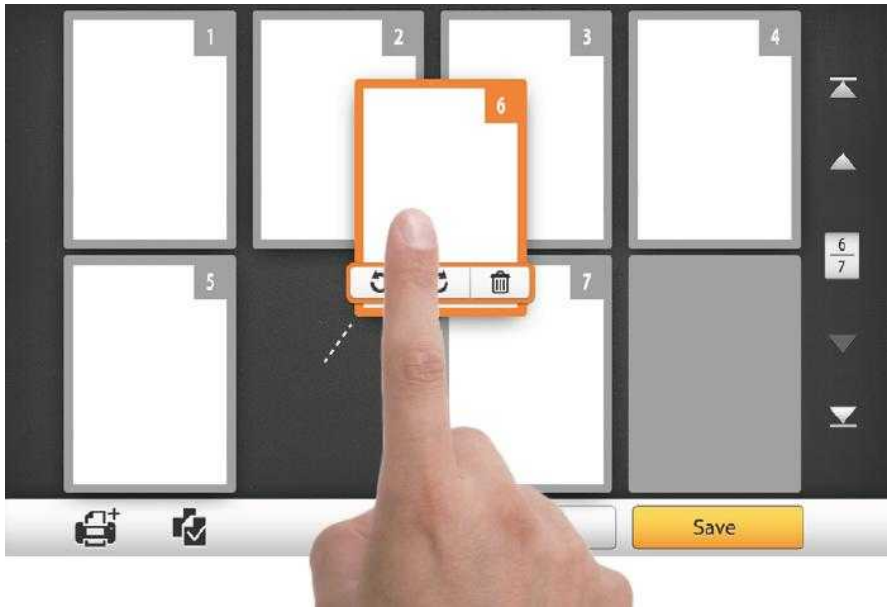

On the right side of the screen, tap the button to go to the first page, tap the button to go to the upper page (For example: from page 7 to page 3), tap the button to go to the lower page (For example: from page 2 to page 6) and tap the button to go to the last page. The upper number of indicates the current page, and the lower number indicates the total number of pages.

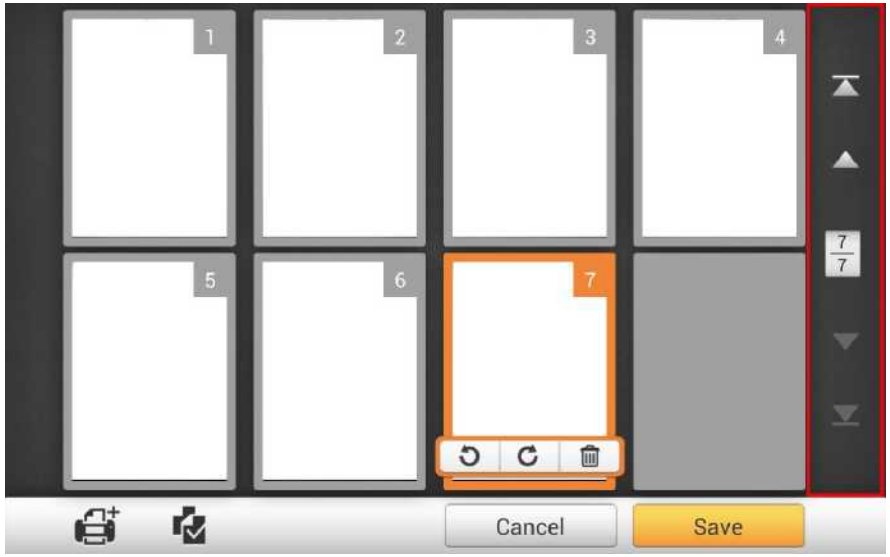

On the bottom of the screen, there are 4 buttons for you to perform the specific functions. Tap **Save** to save the scanned image, tap **Cancel** to cancel the scanned images.

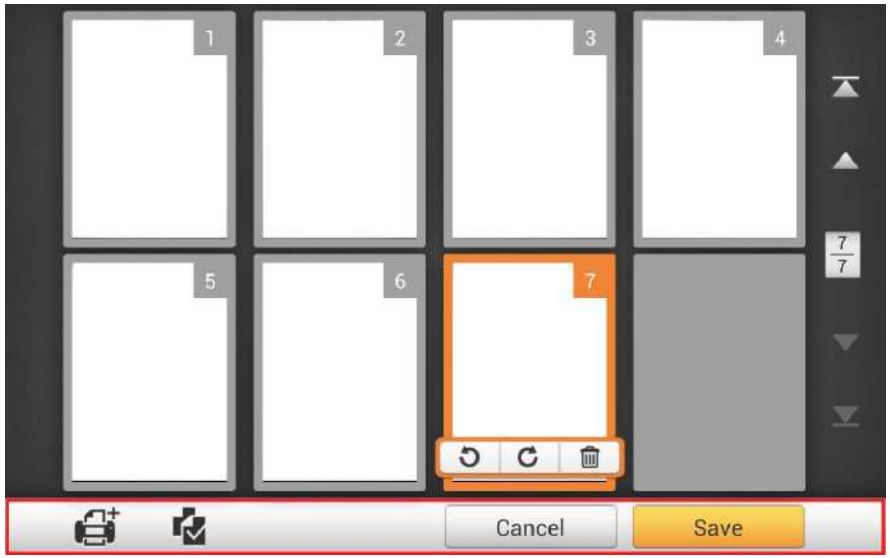

If you want to scan additional documents, first select a desired scanned image on the screen. Tap the button, and the following dialog will prompt you to select where to insert the new scanned image.

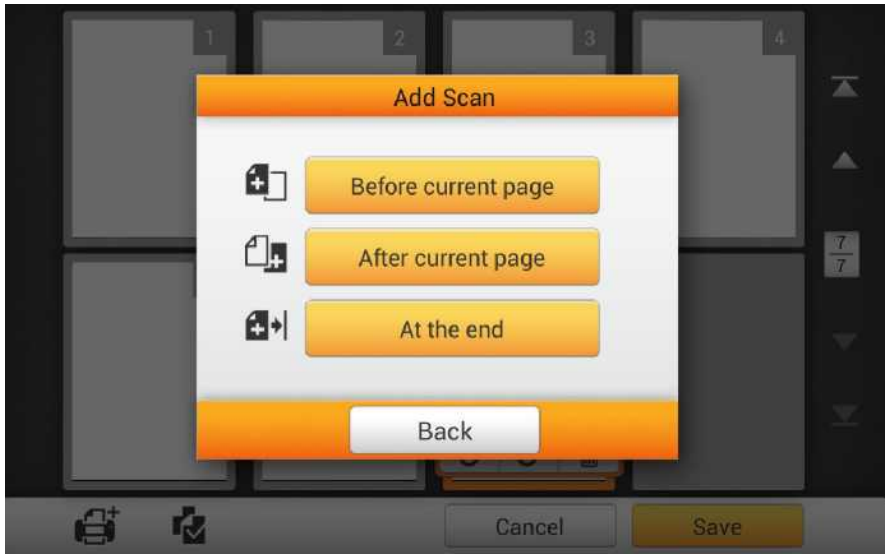

Tap the button to select all the scanned images, shortcuts allow you to delete or rotate all files at the same time.

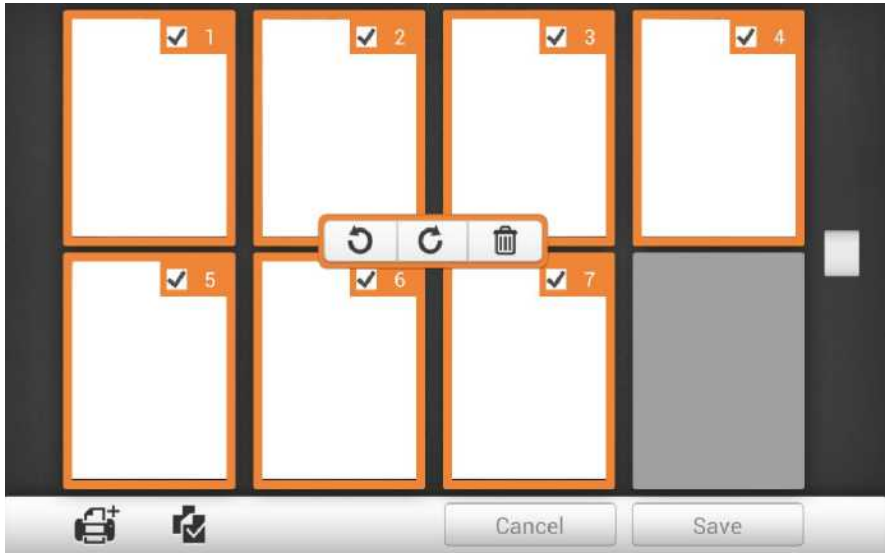

Double-tap on a desired scanned image to enter the image-editing window. You can zoom in on the scanned image by pinching two fingers away from each other, or zoom out on the scanned image by pinching two fingers towards each other. Tap the button on the upper-right corner to exit the image-editing window.

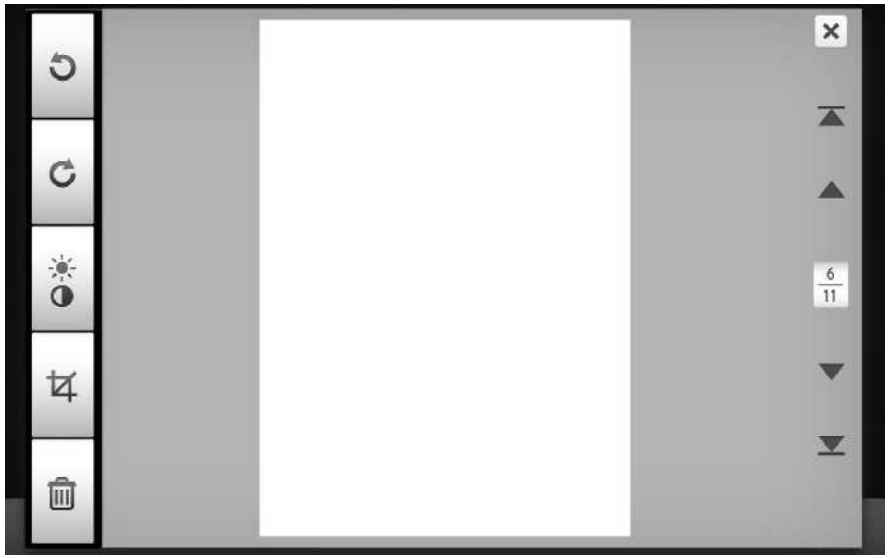

If necessary, you may adjust the scanned image by tapping the buttons on the left side of the screen.

Button	Function
	Turn the image counterclockwise by 90º.
	Turn the image clockwise by 90º.
	Adjust the brightness and contrast levels of the image.

	Crop the image. Adjust the rectangle to define the cropping area.
	Delete the selected image.

SAVING THE SCANNED DOCUMENTS

In the **Save As** dialog, you may rename the scanned document by tapping on the **File Name** field, and select the saving destination by tapping on the desired option under **Select a Destination**. Available options are: **USB**, **PC**, **Mobile**, **Mail**, **FTP**, and **Clouds**. Tap the **Back** button to return to the previous stage, and tap the **Finish** button to quit the scanning procedure.

Save to USB

Tap on the **USB** button to save the scanned document to the USB flash drive.

If you see the following dialog, the scanned document is successfully saved to the USB flash drive. You may tap the **Continue** button to save the scanned document to another destination, or tap the **Finish** button to complete the scanning procedure.

You may tap the **Assign as a new job button** to save this scan job as a frequently used button. Enter the **Name** and tap the **Save** button to save the scan job. You may enter the **Group** name if it is necessary. Next time when you want to scan document to this destination with these scan settings, you can tap the button on the upper-right corner of the main screen to perform this scan job.

Save to PC

Attention

- The scanner and the target device must be on the same segment of the network.
- Download the **eScan Client** software from **System Settings** > **Downloads** > **eScan Client** page. Please install the **eScan Client** software on the user's computer before trying the Save to PC function. In the **eScan Client** interface, you can modify the **User Name**, select the desired file **Folder** and determine the action after the file is downloading. Please make sure the **eScan Client** software is executed before you try the Save to PC function.

Tap the **PC** button to save the scanned document to a desired computer.

The following **Save to PC** dialog opens, tap the **Select a PC** field to select the desired computer from the list.

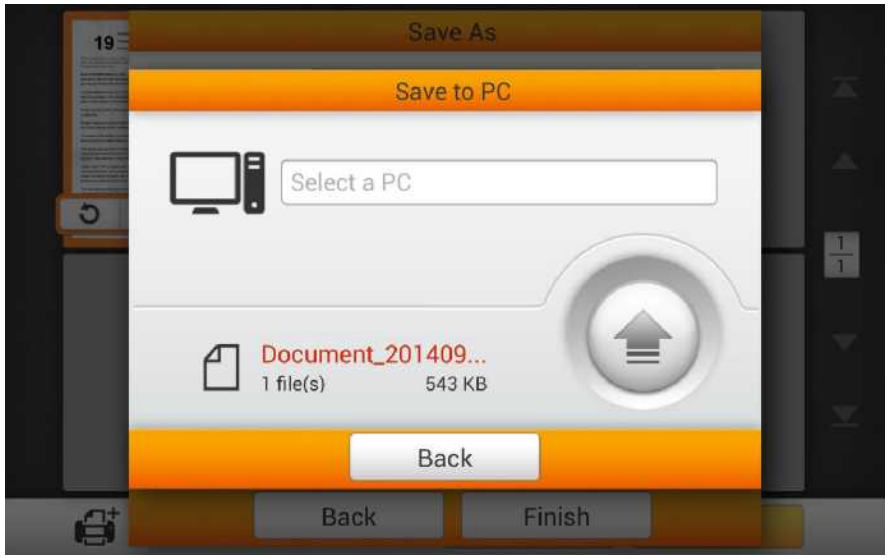

In the **Select a PC** dialog, you can find a list of the connected computers. If the desired computer is not on the list, please tap the button to refresh the list or use the **Search PC** field to search for the desired computer.

After selecting the desired PC, tap the button to save the scanned document to the selected computer.

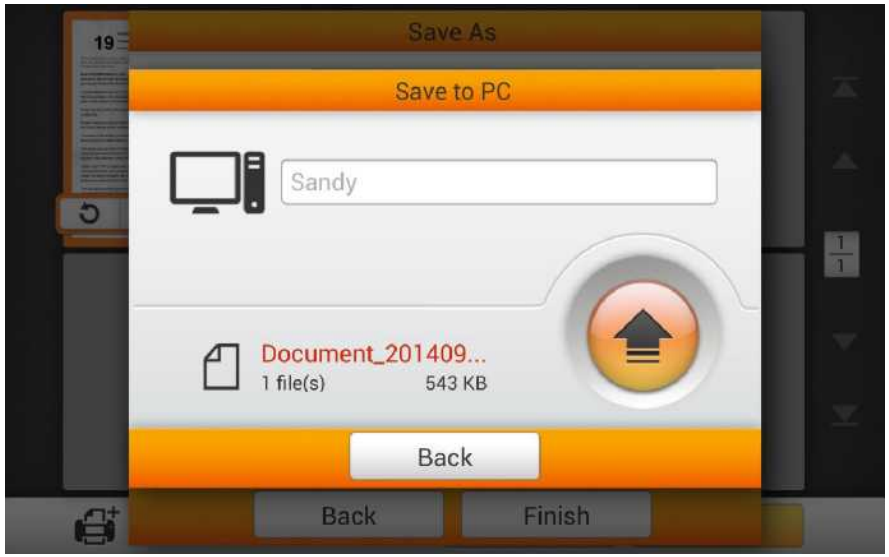

If you see the following dialog, the scanned document is successfully saved to the selected computer. You may tap the **Continue** button to save the scanned document to another destination, or tap the **Finish** button to complete the scanning procedure.

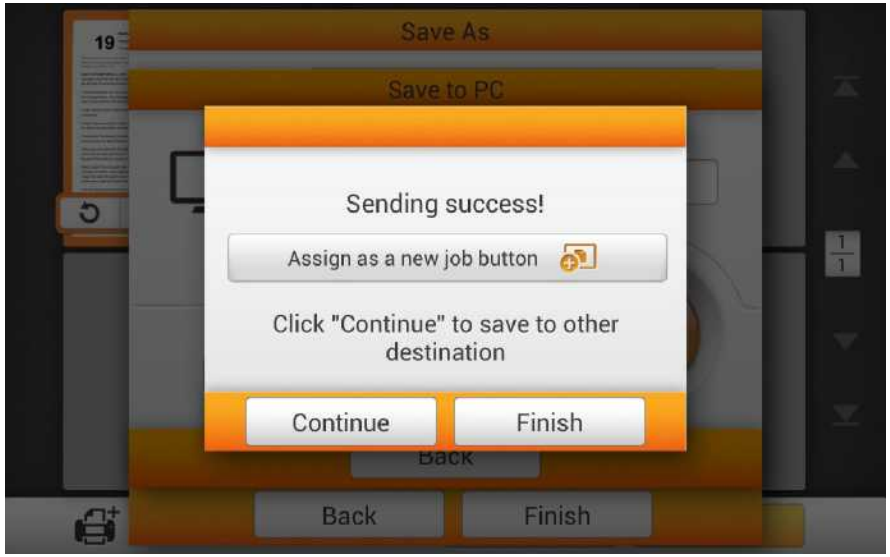

You may tap the **Assign as a new job button** to save this scan job as a frequently used button. Enter the **Name** and tap the **Save** button to save the scan job. You may enter the **Group** name if it is necessary. Next time when you want to scan document to this destination with these scan settings, you can tap the button on the upper-right corner of the main screen to perform this scan job.

Save to Mobile

Attention

- The scanner and the target device must be on the same segment of the network.
- For iOS device, download the **Plustek eScan** app from the **Apple App Store**. Please install the **Plustek eScan** app on the user's mobile device before trying the **Save to Mobile** function. Please make sure the **Plustek eScan** app is executed before you try the **Save to Mobile** function.
- For Android device, download the **Plustek eScan** app from the **Google Play Store**. Please install the **Plustek eScan** app on the user's mobile device before trying the **Save to Mobile** function. Please make sure the **Plustek eScan** app is executed before you try the **Save to Mobile** function.

Tap the **Mobile** button to save the scanned document to a desired mobile device.

The following **Save to mobile** dialog opens, tap the **Select a mobile device** field to select the desired mobile device from the list.

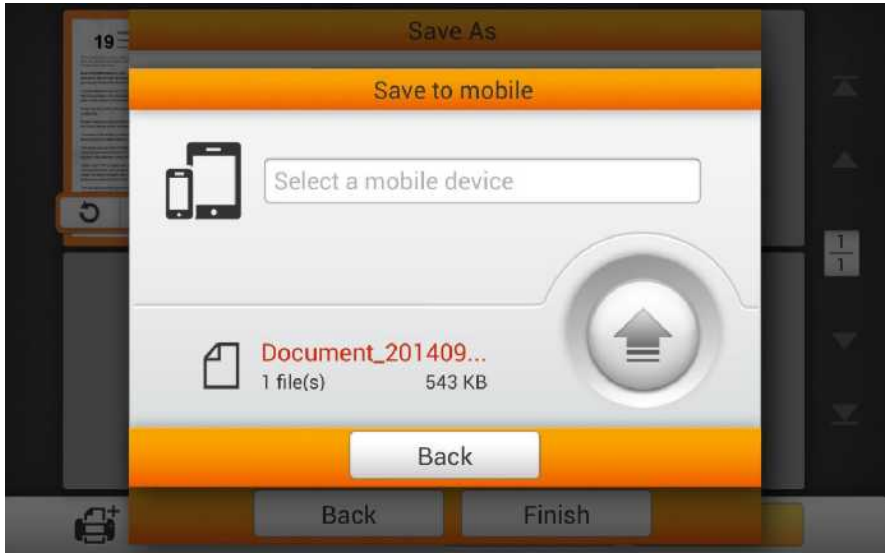

In the **Select a mobile device** dialog, you can find a list of the connected mobile devices. If the desired mobile device is not on the list, please tap the button to refresh the list or use the **Search mobile device** field to search for the desired mobile device.

After selecting the desired mobile device, tap the button to save the scanned document to the selected mobile device.

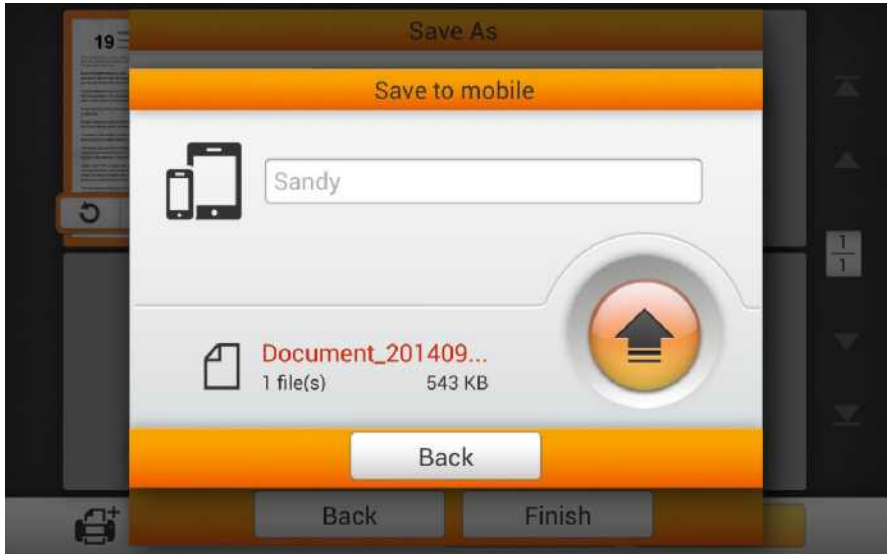

If you see the following dialog, the scanned document is successfully saved to the selected mobile device. You may tap the **Continue** button to save the scanned document to another destination, or tap the **Finish** button to complete the scanning procedure.

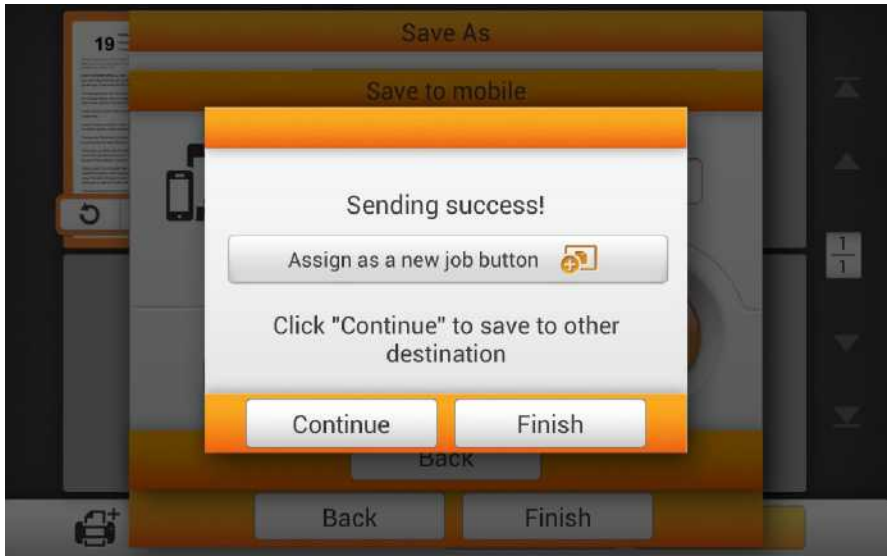

You may tap the **Assign as a new job button** to save this scan job as a frequently used button. Enter the **Name** and tap the **Save** button to save the scan job. You may enter the **Group** name if it is necessary. Next time when you want to scan document to this destination with these scan settings, you can tap the button on the upper-right corner of the main screen to perform this scan job.

Save to Mail

Tap the **Mail** button to send the scanned document to a desired e-mail address.

The following **Save to mail** dialog opens, you may modify the sender name if necessary. Enter the receiver e-mail address in the **To:** field. If necessary, you may enter an e-mail address in the **CC:** field, and enter the **Subject**.

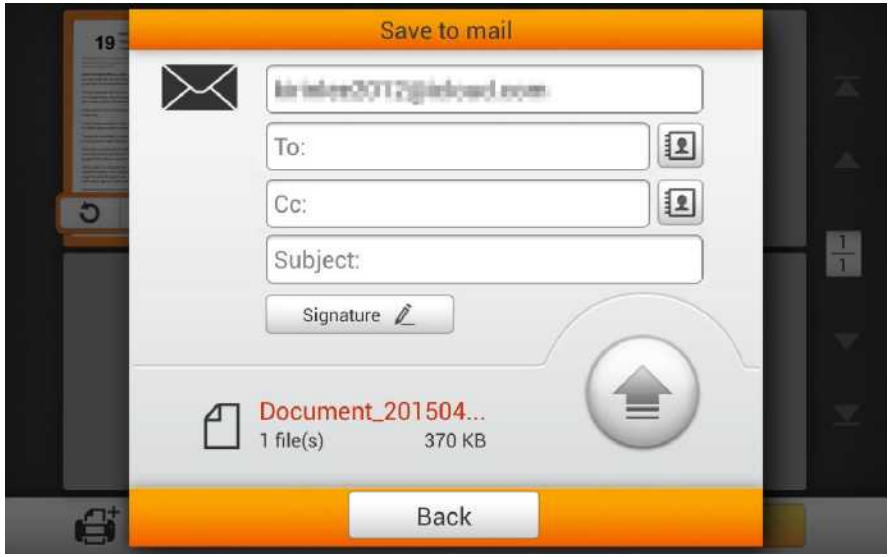

You may tap the button to select a preset e-mail address. Enter the **Name** and the **Email address**, then tap the button to save the e-mail address. You may save up to 20 e-mail addresses in this address book.

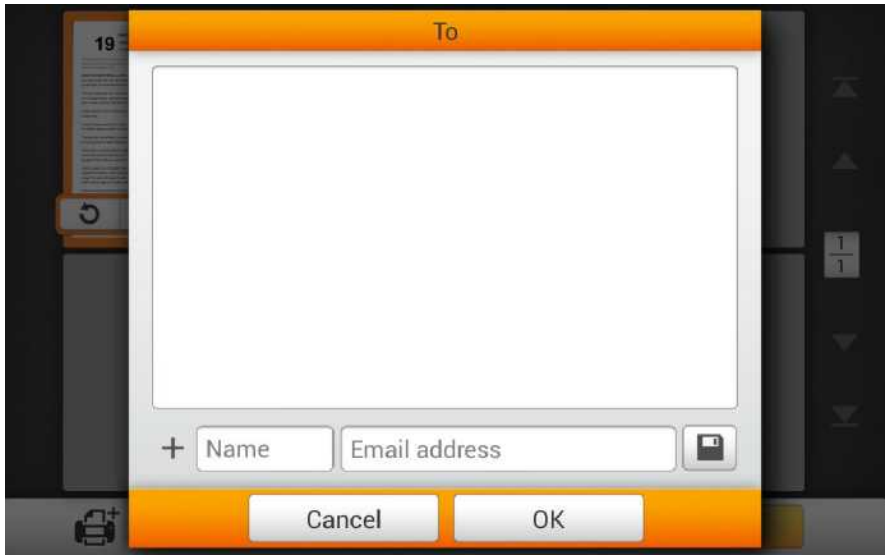

You may tap the Signature button to edit the signature. Enter the desired content in the blank. Tap the Clear All button to clear all the texts.

After setting the desired e-mail address, tap the button to send the scanned document to the desired e-mail address.

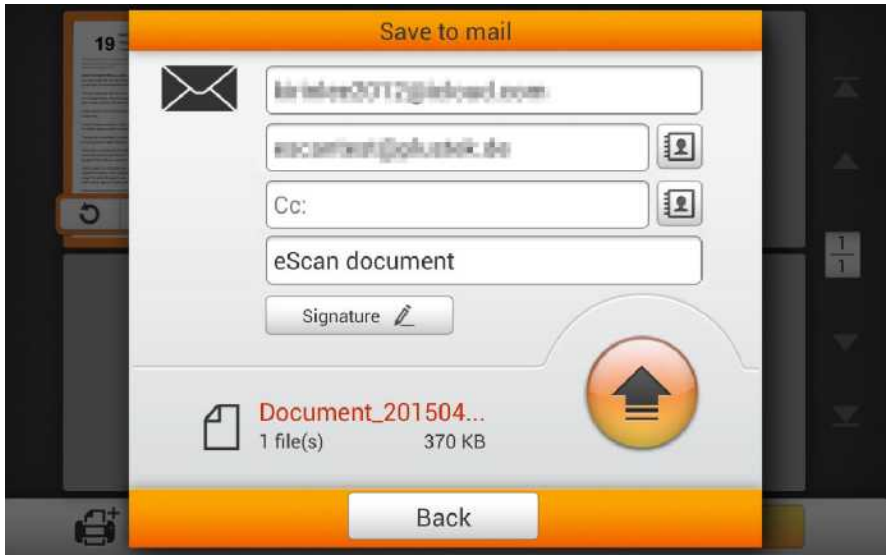

If you see the following dialog, the scanned document is successfully sent to the desired e-mail address. You may tap the **Continue** button to save the scanned document to another destination, or tap the **Finish** button to complete the scanning procedure.

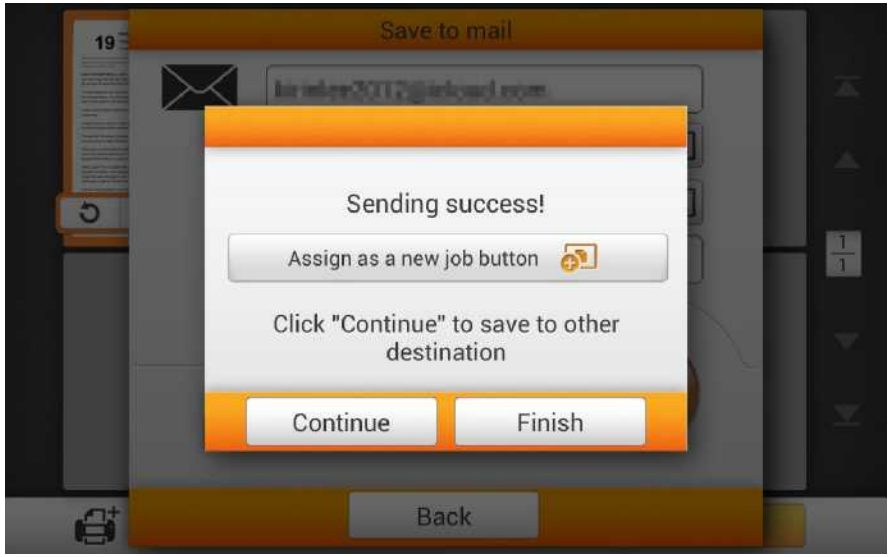

You may tap the **Assign as a new job button** to save this scan job as a frequently used button. Enter the **Name** and tap the **Save** button to save the scan job. You may enter the **Group** name if it is necessary. Next time when you want to scan document to this destination with these scan settings, you can tap the button on the upper-right corner of the main screen to perform this scan job.

Save to FTP

Tap the **FTP** button to save the scanned document to a FTP server. If you have already setup a FTP server in the **System Settings** page, you don't have to go through the following procedure. The scanned document will be saved to the preset FTP server directly.

Enter the FTP address, username and password. If necessary, you may change the **Port** on the left side. Tap the Connect button to connect to the FTP server.

Information	The default port number for **FTP** is **21**, and the default port number for **SFTP** is **22**.

Tap the

button to select the desired saving folder on the FTP server.

After successfully connecting to the FTP server, tap the button to save the scanned document to the FTP server.

If you see the following dialog, the scanned document is successfully saved to the FTP server. You may tap the **Continue** button to save the scanned document to another destination, or tap the **Finish** button to complete the scanning procedure.

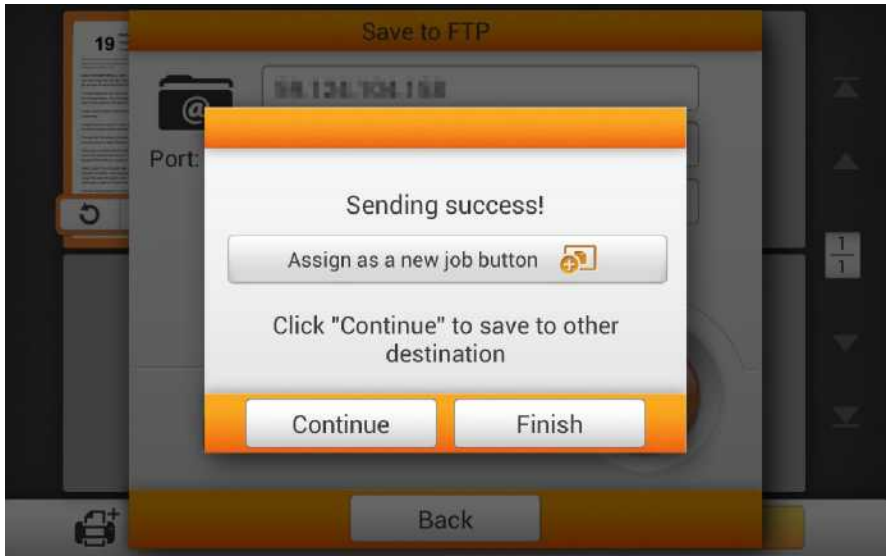

You may tap the **Assign as a new job button** to save this scan job as a frequently used button. Enter the **Name** and tap the **Save** button to save the scan job. You may enter the **Group** name if it is necessary. Next time when you want to scan document to this destination with these scan settings, you can tap the button on the upper-right corner of the main screen to perform this scan job.

Save to Clouds

Tap the **Clouds** button to save the scanned document to a desired cloud server. If you have already setup a cloud server in the **System Settings** page, you don't have to go through the following procedure. The scanned document will be saved to the preset cloud server directly.

Tap the desired cloud server.

Enter **Server** and **Port** if necessary. Enter the email address or username and the password for the selected cloud server. Tap the Connect button to connect to the cloud server.

Tap the Folder button to select the desired saving folder on the cloud server.

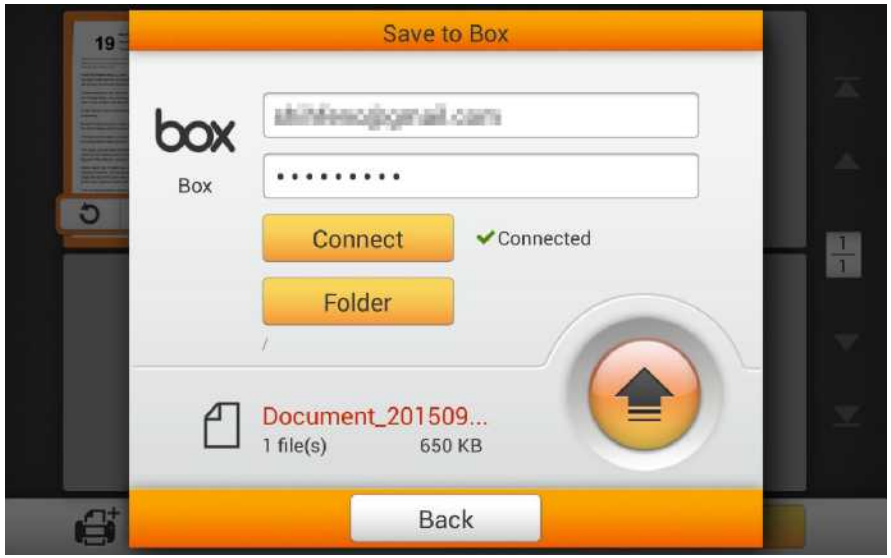

After successfully connecting to the cloud server, tap the button to save the scanned document to the desired cloud server.

If you see the following dialog, the scanned document is successfully saved to the desired cloud server. You may tap the **Continue** button to save the scanned document to another destination, or tap the **Finish** button to complete the scanning procedure.

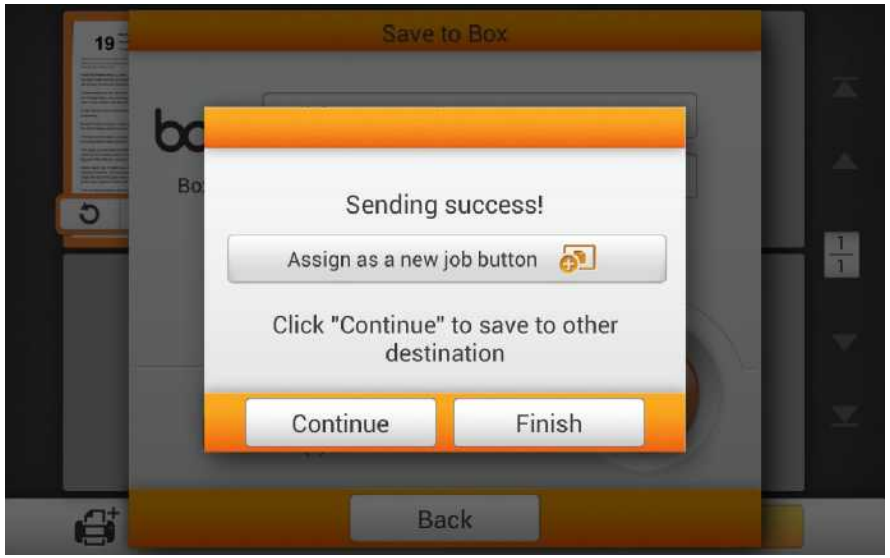

You may tap the **Assign as a new job button** to save this scan job as a frequently used button. Enter the **Name** and tap the **Save** button to save the scan job. You may enter the **Group** name if it is necessary. Next time when you want to scan document to this destination with these scan settings, you can tap the button on the upper-right corner of the main screen to perform this scan job.

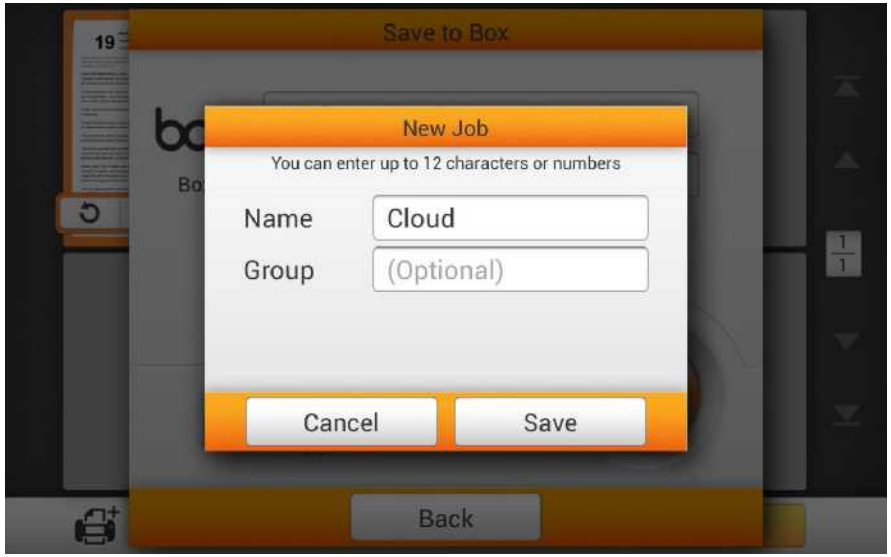

Selecting Dropbox as the cloud server

Tap the **Dropbox** to select Dropbox as the cloud server.

Tap the button to login to the Dropbox for the first time by using the eScan.

The Dropbox login dialog appears. Enter the email address and the password then tap on **Sign in**.

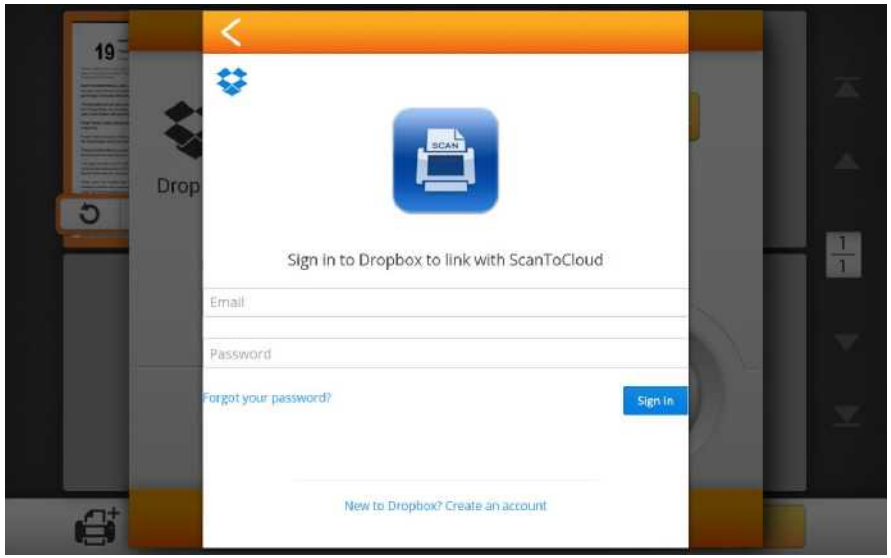

Tap on **Allow** button to allow the ScanToCloud to communicate with the Dropbox and the eScan.

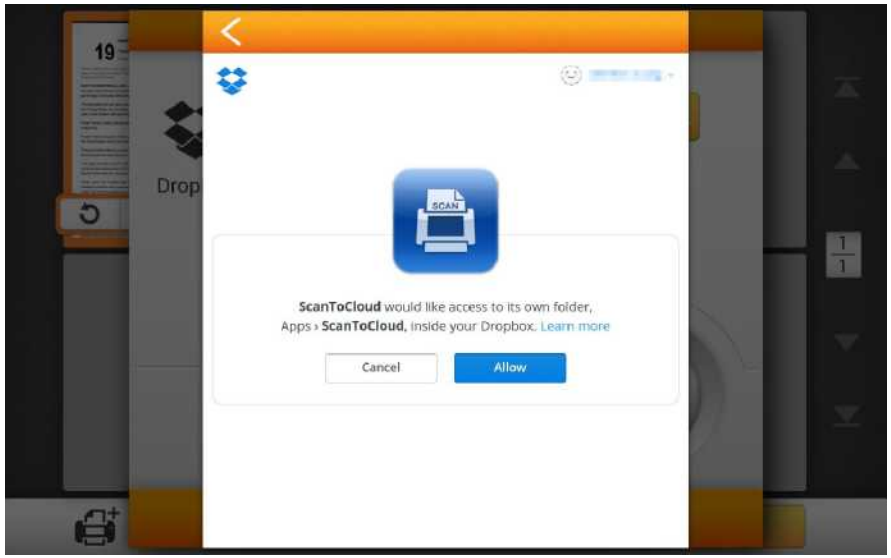

Tap on **Okay, I understand** button for the privacy attention dialog.

Enter the **Password** if it is necessary. Enter the password in **Confirm Password** to confirm.

The device allows you to store multiple accounts with selected cloud services*. If you are sharing the device, it is recommended that you setup another password to protect your account being intruded by others. The password here, does not have to be identical to your cloud account. You can skip this step, by leaving the 'optional' password blank, and tap on **OK** to continue. (You may setup the password at a later time)

Storing multiple accounts are currently solely available on Dropbox and Google Drive.

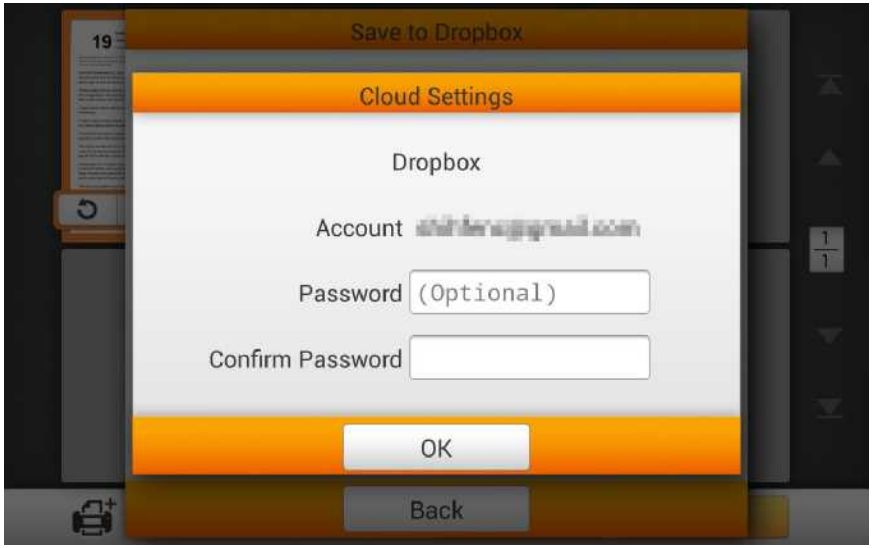

Tap the button to select account if you have already login the Dropbox by eScan. Enter the password you've already set in the previous dialog if it is necessary. Tap the Connect button to connect to the cloud server.

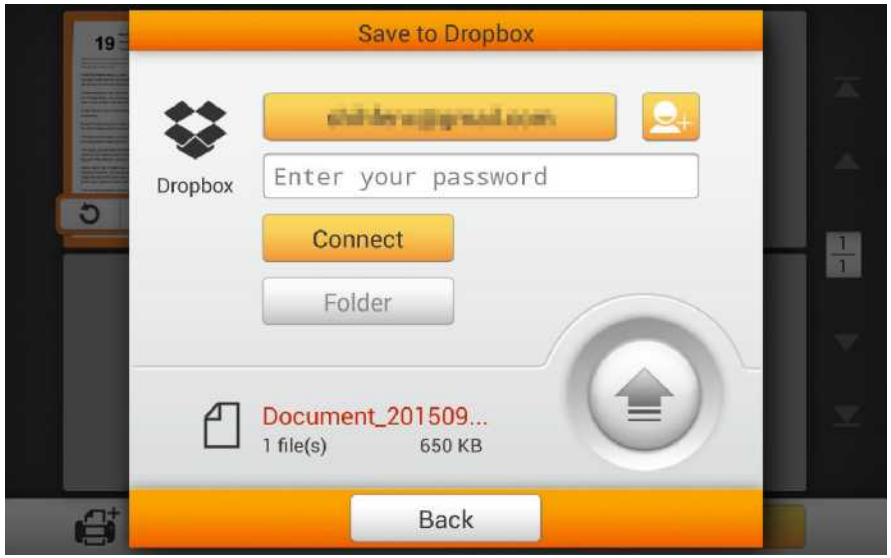

Tap the Folder button to select the desired saving folder on the cloud server.

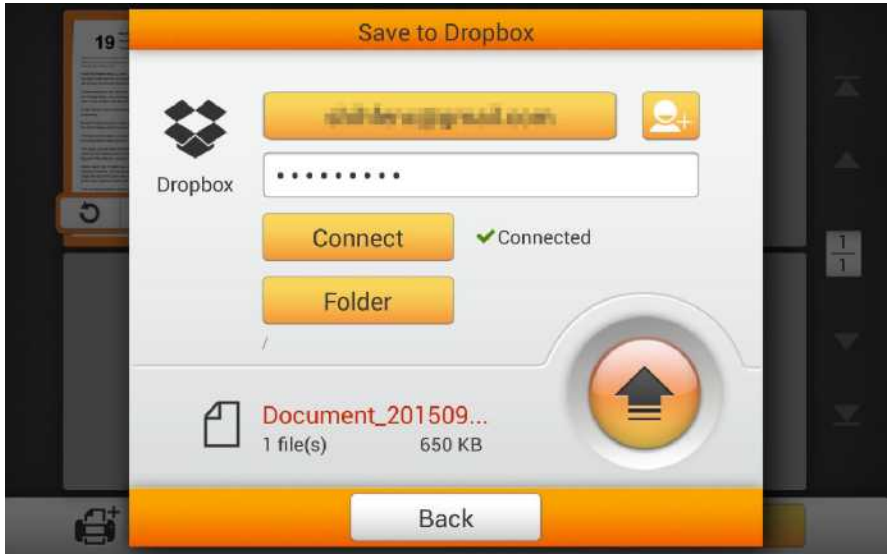

After successfully connecting to the cloud server, tap the button to save the scanned document to the desired cloud server.

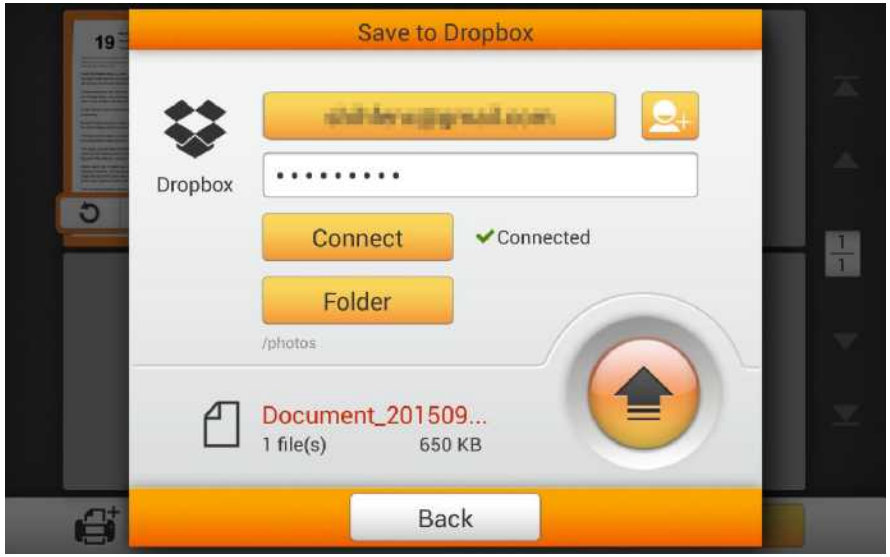

If you see the following dialog, the scanned document is successfully saved to the desired cloud server. You may tap the **Continue** button to save the scanned document to another destination, or tap the **Finish** button to complete the scanning procedure.

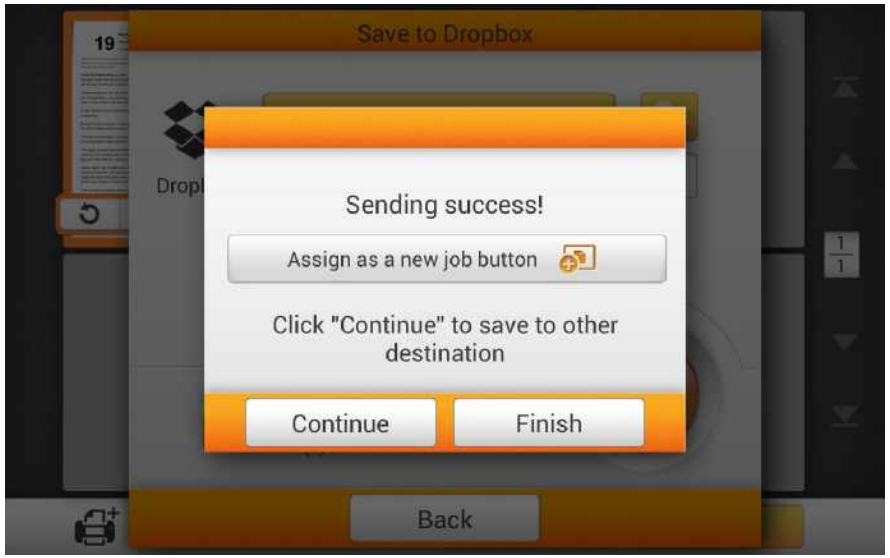

You may tap the **Assign as a new job button** to save this scan job as a frequently used button. Enter the **Name** and tap the **Save** button to save the scan job. You may enter the **Group** name if it is necessary. Next time when you want to scan document to this destination with these scan settings, you can tap the button on the upper-right corner of the main screen to perform this scan job.

Selecting Google Drive as the cloud server

(You have to set **ON** either **2-Step Verification** or **Allow less secure apps** in your Google account **Sign-in & security** settings first.)

Tap the **Google Drive** to select Google Drive as the cloud server.

Tap the button to login to the Google Drive for the first time by using the eScan.

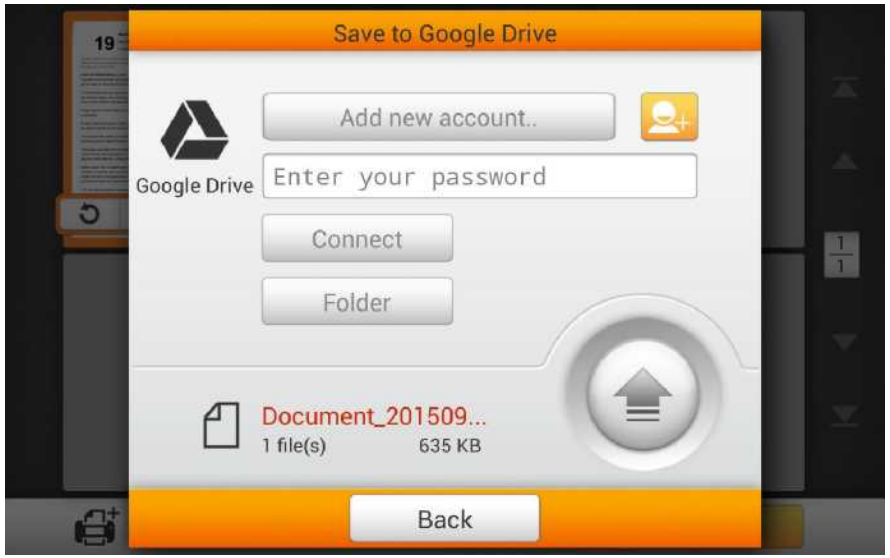

The Google login dialog appears. Enter your account then tap on **Next**. (You have to set **ON** either **2-Step Verification** or **Allow less secure apps** in your Google account **Sign-in & security** settings first.)

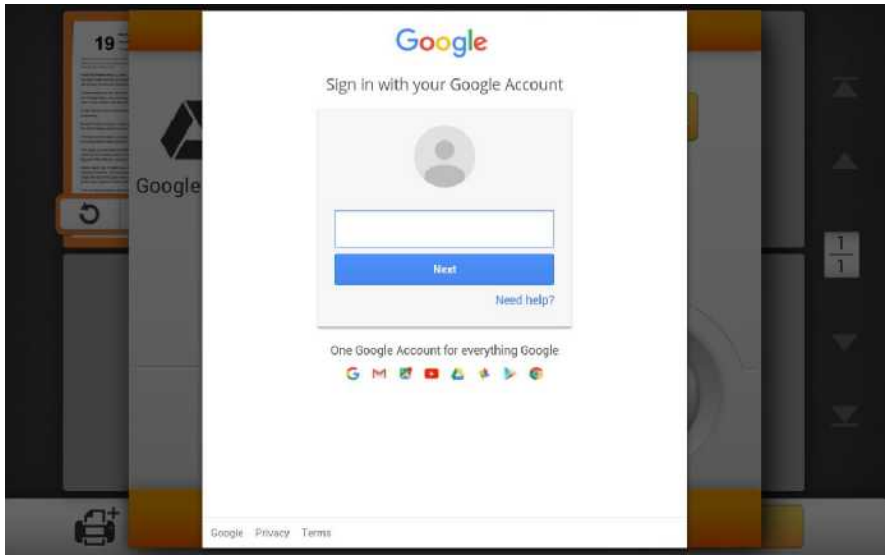

Enter your password then tap on **Sign in**.

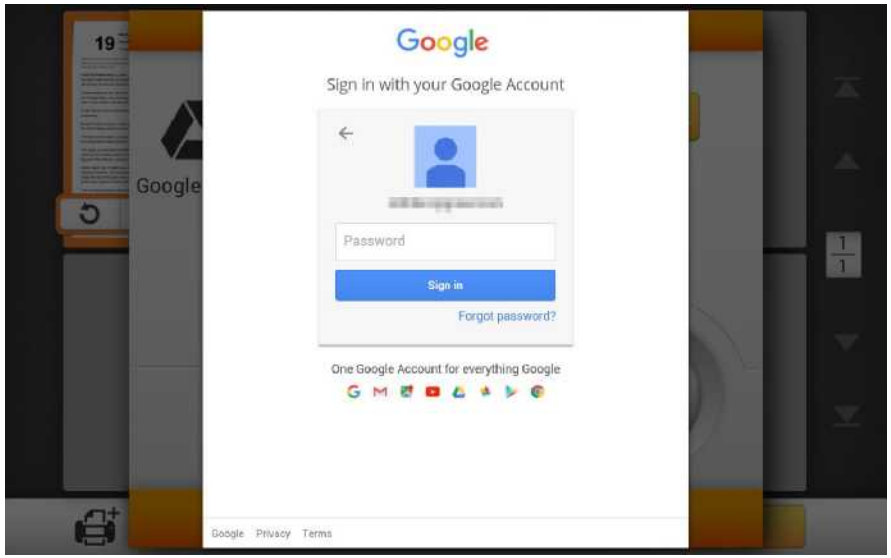

Tap on **Allow** button to allow the Plustek app to communicate with the Google Drive and the eScan.

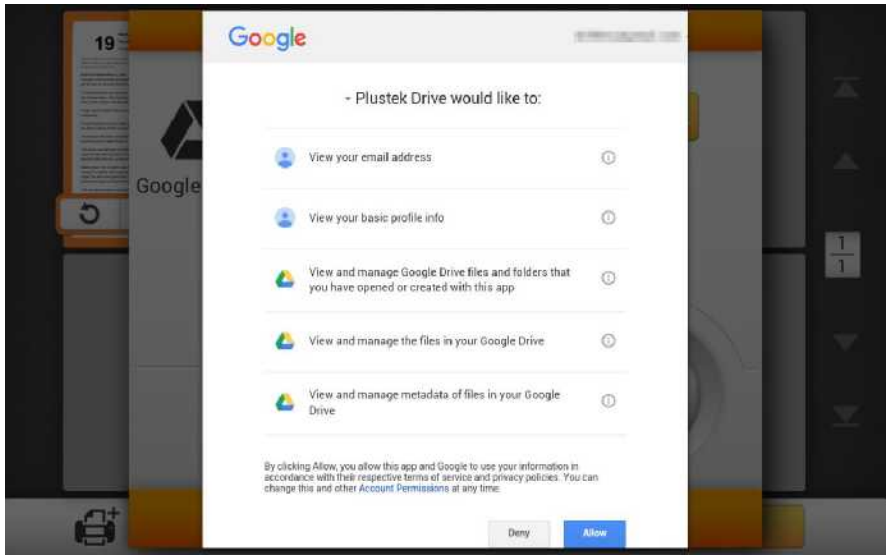

Tap on **Okay, I understand** button for the privacy attention dialog.

Enter the **Password** if it is necessary. Enter the password in **Confirm Password** to confirm.

The device allows you to store multiple accounts with selected cloud services. If you are sharing the device, it is recommended that you setup another password to protect your account being intruded by others. The password here, does not have to be identical to your cloud account. You can skip this step, by leaving the 'optional' password blank, and tap on **OK** to continue. (You may setup the password at a later time)

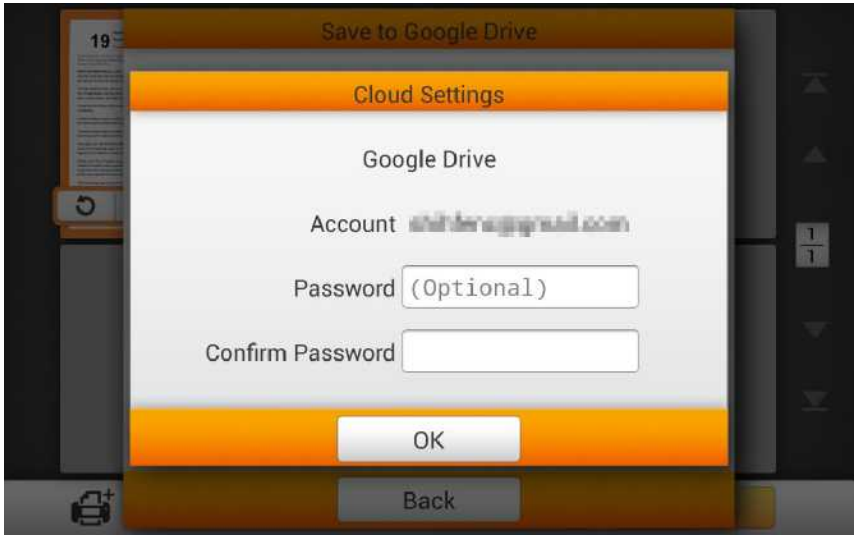

Tap the button to select account if you have already login the Google Drive by eScan. Enter the password you've already set in the previous dialog if it is necessary. Tap the Connect button to connect to the cloud server.

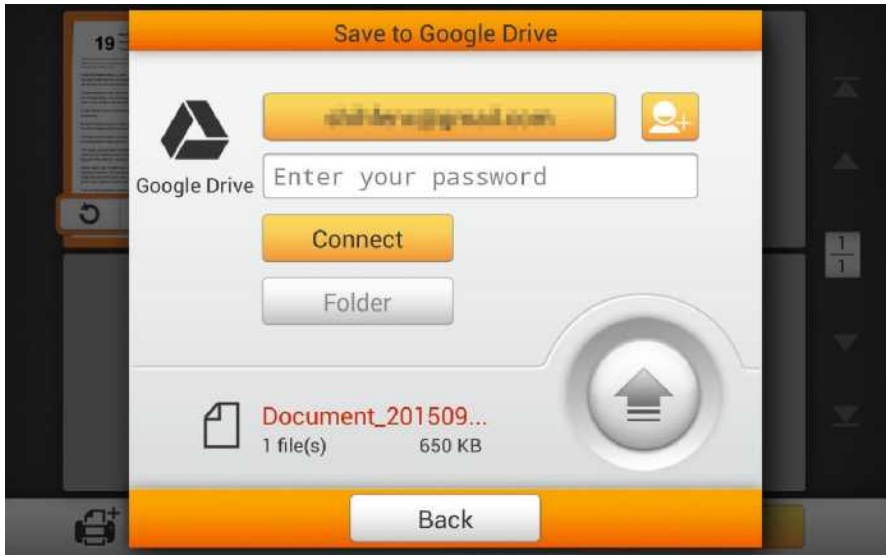

Tap the Folder button to select the desired saving folder on the cloud server.

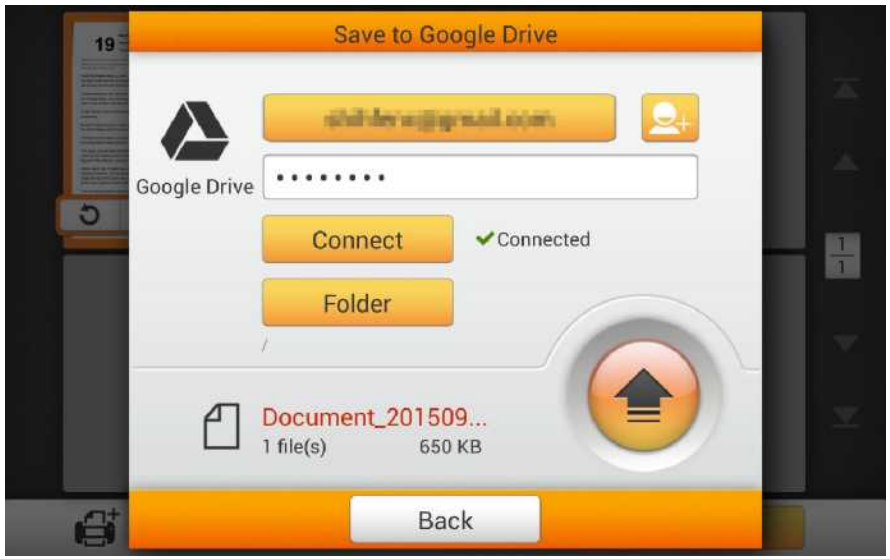

After successfully connecting to the cloud server, tap the button to save the scanned document to the desired cloud server.

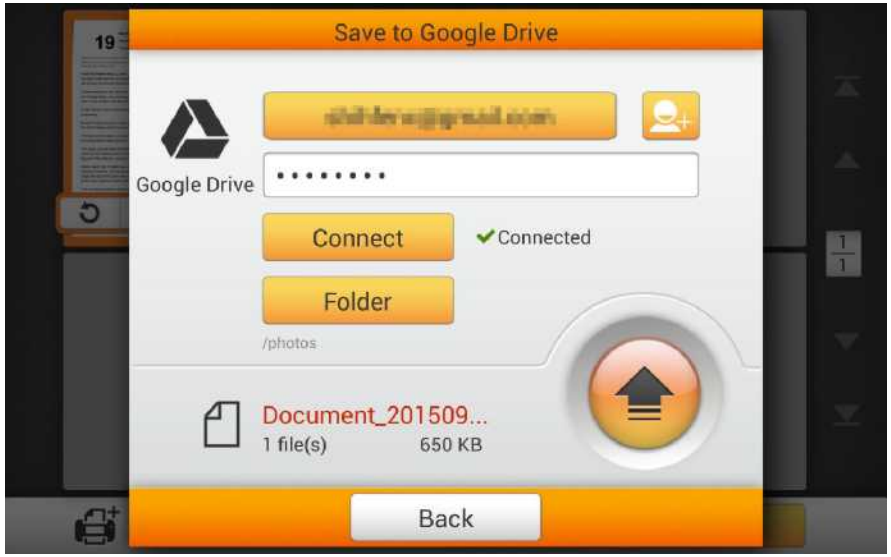

If you see the following dialog, the scanned document is successfully saved to the desired cloud server. You may tap the **Continue** button to save the scanned document to another destination, or tap the **Finish** button to complete the scanning procedure.

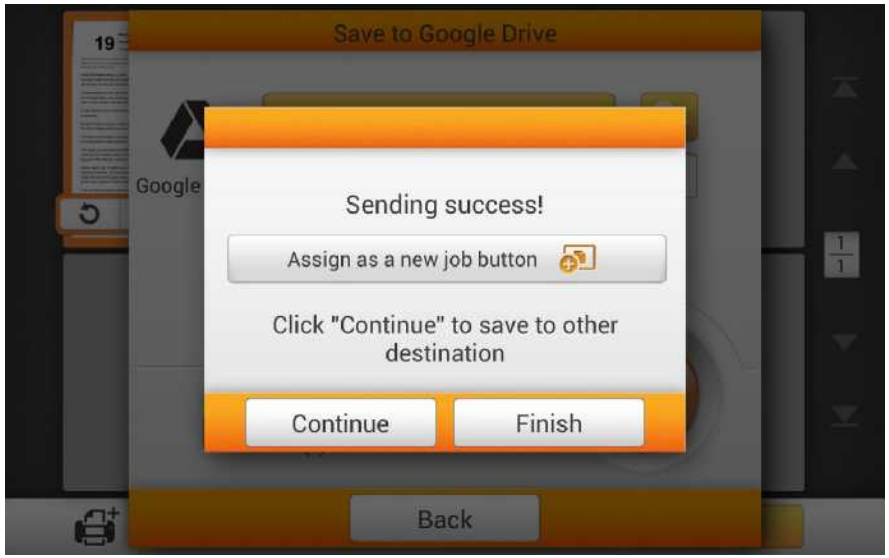

You may tap the **Assign as a new job button** to save this scan job as a frequently used button. Enter the **Name** and tap the **Save** button to save the scan job. You may enter the **Group** name if it is necessary. Next time when you want to scan document to this destination with these scan settings, you can tap the button on the upper-right corner of the main screen to perform this scan job.

For Advance Users

Save2Share

The 'Save2Share (SMB)' CustomApp design by Plustek is a complementary application that allows users to save scan images and files to a designated folder on the same networks. Whether is on a PC, NAS, or other network connected device. This application can save user the hassle and directly transfer scan results to user's desire destination.

The complementary application can be download from http://escan.plustek.com

Note: The scanning device and your scanning destination must be on the same network for Save2Share application to correctly operate.

Tap on the button to save the scanned document to the specific network folder.

Select the desired network device, by tapping on the device name from the alphabetical order list on the bottom of the screen or enter the device's IP address directly.

1. Enter the **Username** and **Password** for the selected network device. Tick the checkbox to **Save password** if necessary.
2. Tap the button to connect.
3. Enter the Domain name if necessary.
4. Tap the to select the desired folder.
5. Tap the button to save the scanned document to the selected network device.
6. Tap the button to exit this application.

Your settings will be saved under "♥" tap for quick connection.

If you would like to remove the settings from "♥" tap, simply tap on the "🗑" icon next to the network device's name.

Save2FTP

The 'Save2FTP' CustomApp design by Plustek is a complementary application that allows users to save scan images and files to a designated folder on the FTP (File Transfer Protocol). Simply follow the instructions enclosed and save the hassle.

The complementary application can be download from http://escan.plustek.com

Tap on the button to save the scanned document to the specific FTP folder.

1. Enter the Host name or the IP address of the FTP server in the **Host** column.
2. Select the **Protocol** and the **Encryption**.
3. Enter the **Username** and **Password** for the selected FTP server.
4. Tap the button to connect to the FTP server. You can also select the desired FTP from the Quick Connect list at the bottom of the screen if you have previously connected to the FTP server.
5. Tap the to select the desired folder.
6. Tap the button to save the scanned document to the selected FTP server.
7. Tap the button to exit this application.

Your settings will be saved under "Quick Connect" tap for quick connection.

If you would like to remove the settings from "Quick Connect" tap, simply tap on the "" icon next to the FTP settings.

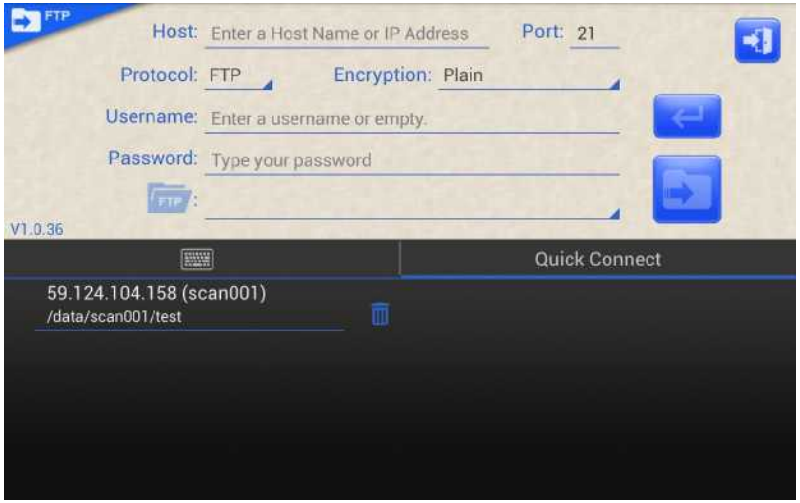

JOB BUTTON SCAN

Tap the button on the upper-right corner of the main screen to perform the preset scan job.

Tap on the desired button to scan document with the preset scan settings then save the scan file to the specific destination.

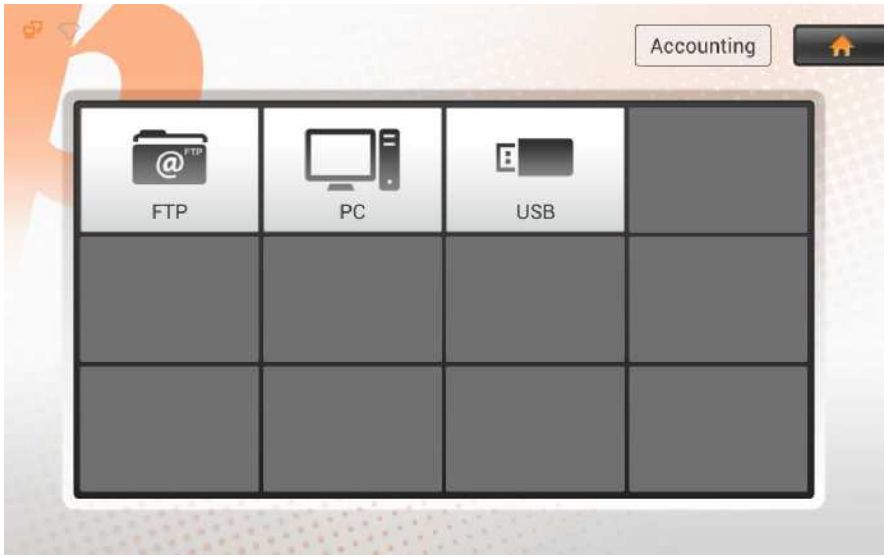

Tap the Accounting **Group** button to select the desired group if it is necessary. The group name is listed by alphabetical order.

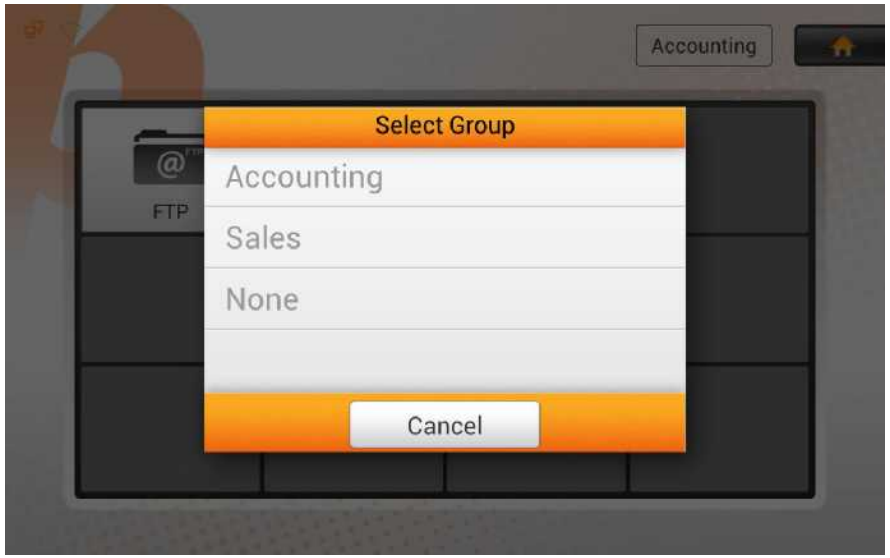

Tap and drag the desired button to the **REMOVE** area on the top of the screen to remove the selected button. If you remove all the job buttons from one group, the group will be removed automatically. Tap the **Home** button on the upper-right corner to return to the main screen.

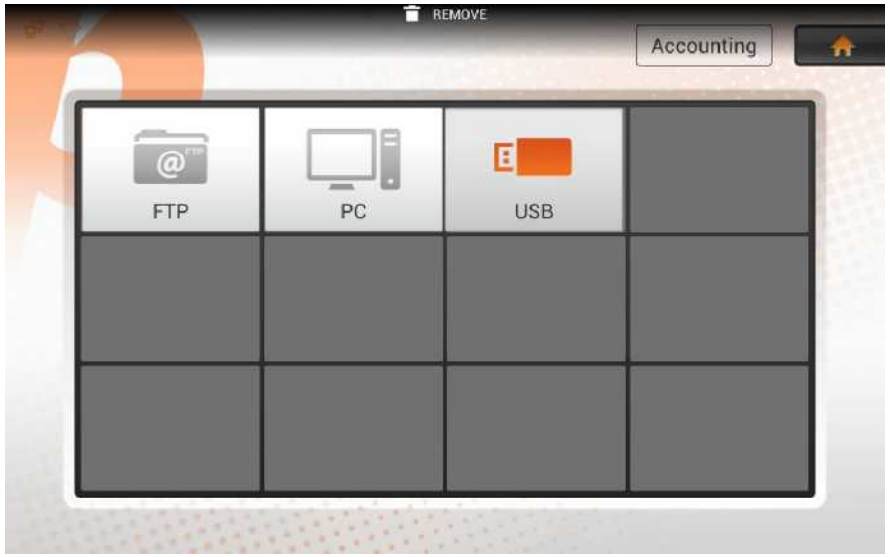

CHAPTER III. CARE AND MAINTENANCE

Your scanner is designed to be maintenance-free. However, constant care and maintenance can keep your scanner working smoothly.

CLEANING THE SCANNER

Paper powder, dust, ink and toner from paper being scanned may make the inner ADF dirty, which leads to poor image quality or document-feeding errors. How often to clean your scanner depends on the type of paper and number of pages being scanned.

Perform the following procedures to clean the scanner surface and the ADF unit. Gently wipe locations described herein. Do not rub too hard.

Warning

- Before cleaning the scanner, turn off the scanner and disconnect the scanner's power cable and Ethernet cable, and then wait a few minutes for the glass and/or the inner ADF to cool to ambient temperature.
- Wash your hands with soap and water after cleaning the scanner.

Cleaning Materials

Have the following cleaning materials ready to clean the scanner:

- **soft, dry, lint-free cloth (or a cotton swab)**
- **non-abrasive cleaner**—Isopropyl alcohol (95%). DO NOT use water.

Attention

- Alternatively you can use glass cleaner or neutral detergent for windows cleaning to clean the scanner glass.
- However, DO NOT use either of them to clean the ADF feed roller or pad module.
- Use of other cleaning materials could damage your scanner.

Cleaning the ADF

1. Open the panel unit by pulling the lever.

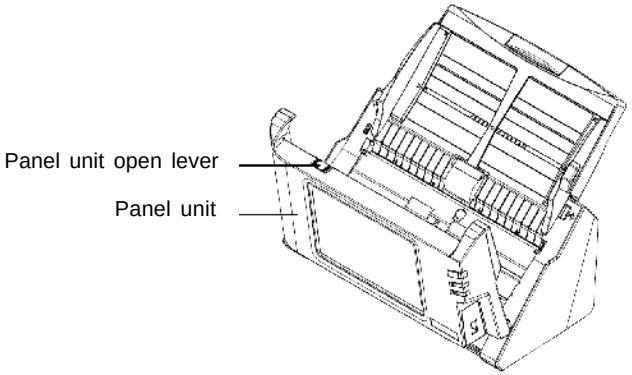

2. Gently wipe the following areas with the cloth dampened with the cleaner. Be careful NOT to scratch their surfaces.

Clean Feed Roller:

Wipe the Feed Roller from side to side and then rotate it. Repeat this until its entire surface is cleaned.

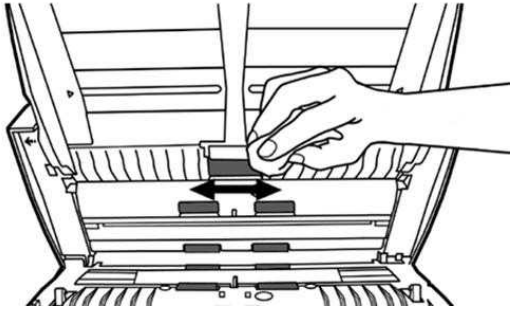

Clean Pad Module:

Wipe the Pad Module from top to bottom (in the direction of arrow shown in below picture). Be careful not to damage the pick springs of the pad.

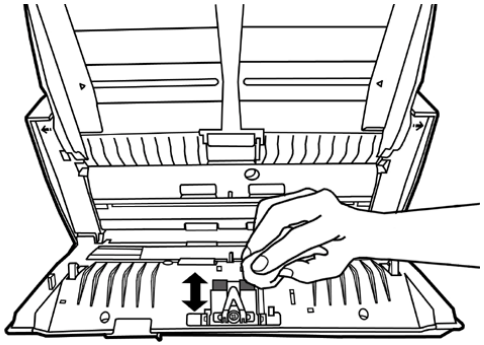

Clean ADF Glass:

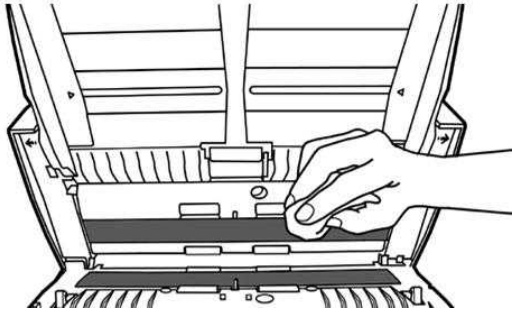

Attention	Do not spray cleaner directly onto the scanner glass. Excess liquid residue may fog or damage the scanner.

3. Wait for cleaned areas to dry completely.
4. Close the panel unit by pushing it back down until it snaps back into place.

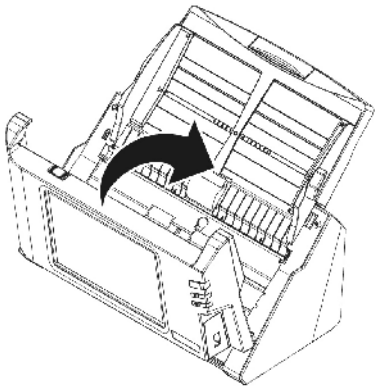

REPLACING CONSUMABLES

As a guideline, it is recommended to replace the pad module every 50000 sheets of scans (A4, 70 g/m^2 or 18 lb.), and it is recommended to replace the feed roller every 300000 sheets of scans (A4, 70 g/m^2 or 18 lb.).

Replacing the Pad Module

1. Open the panel unit by pulling the panel unit open lever.

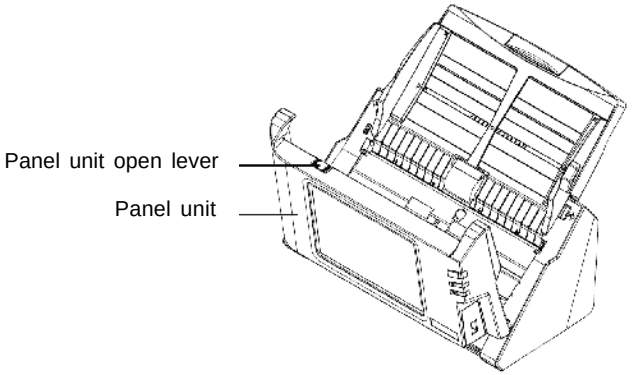

2. Remove the pad module by pinching both sides of the pad module and pull it out.

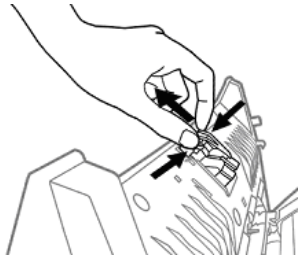

3. Install the new pad module by inserting the tabs on the module onto their slots on the scanner.

4. Close the panel unit by pushing it back down until it snaps back into place.

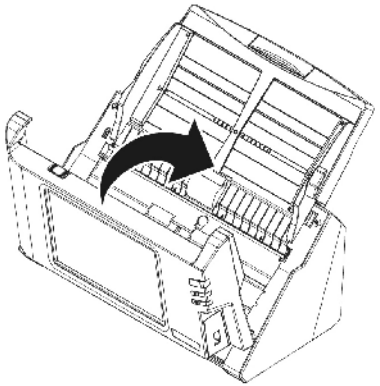

Replacing the Feed Roller

1. Open the panel unit by pulling the panel unit open lever.

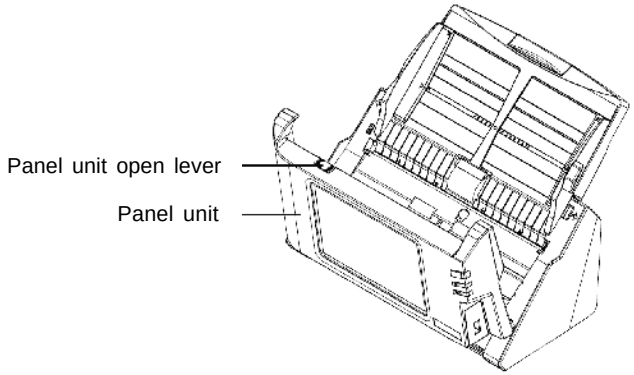

2. Remove the paper chute by pinching both sides of the handles on the paper chute to remove it.

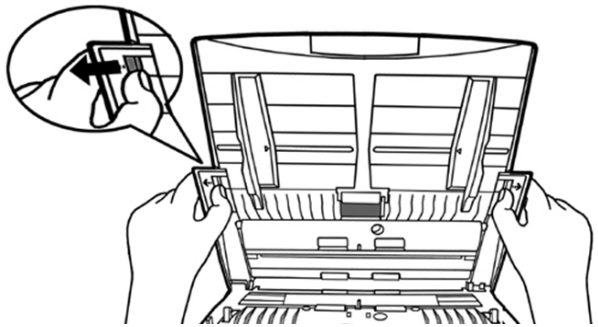

3. Remove the feed roller by pinching both sides of the feed roller and pull it out.

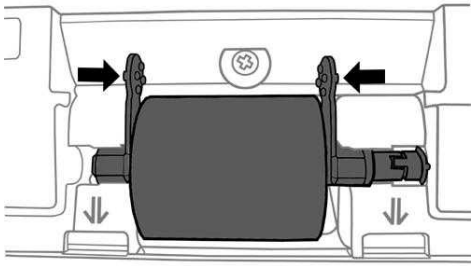

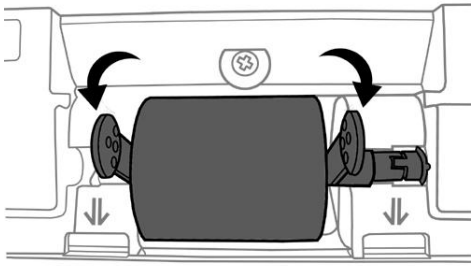

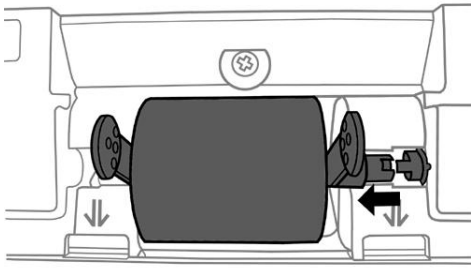

4. Install the new feed roller by aligning and inserting the feed roller onto the roller pitman on the scanner.

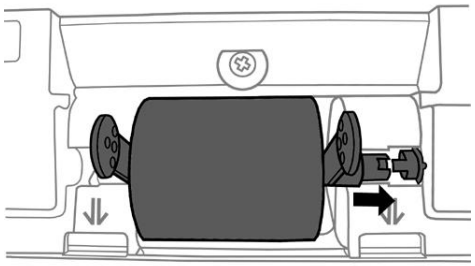

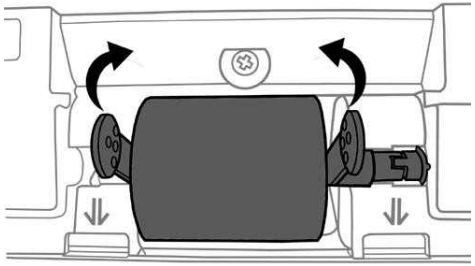

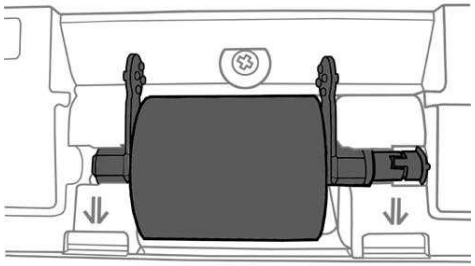

5. Install the paper chute by aligning and inserting the tabs of the paper chute into their slots on the scanner.

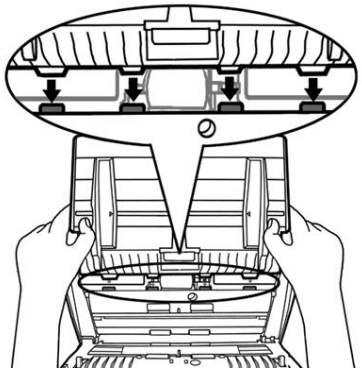

6. Close the panel unit by pushing it back down until it snaps back into place.

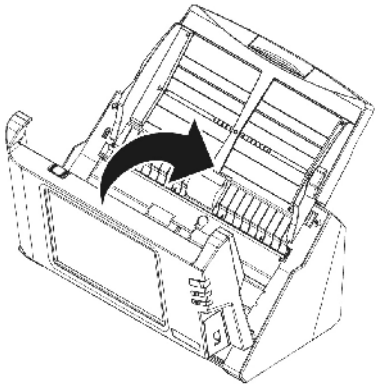

CHAPTER IV. TROUBLESHOOTING

If you encounter problems with your scanner, please review the installation and scanning instructions contained in this guide.

CLEARING PAPER JAMS

If a paper jam in the ADF happens, please perform the following steps:

1. Remove any unjammed documents still loaded into the ADF.
2. Open the panel unit by pulling the panel unit open lever.

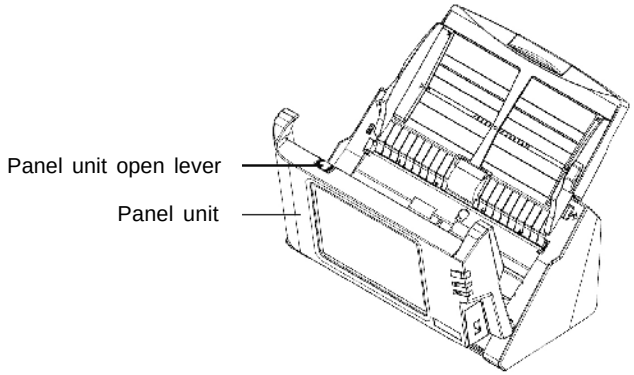

3. Gently but firmly pull the jammed documents out of the ADF. Try to avoid creasing or wrinkling the documents.

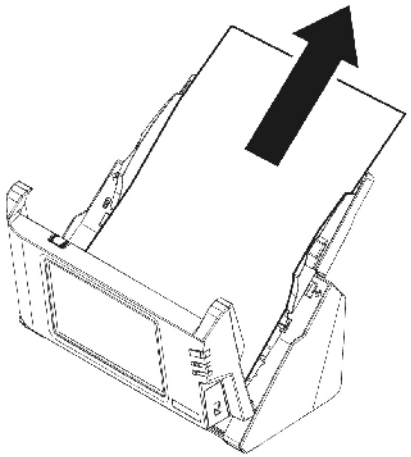

Attention	Do not try to pull jammed or half-scanned documents out of the ADF without first opening the panel unit. Doing so may permanently damage the ADF.

4. Close the panel unit by pushing it back down until it snaps back into place.

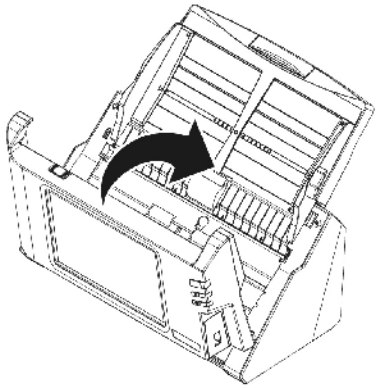

APPENDIX A: SPECIFICATIONS[5]

Image Sensor	CIS x 2
Light Source	LED
Optical Resolution	600 dpi
Hardware Resolution	600 x 600 dpi
ADF Capacity	50 sheets (70 g/m², 18 Lbs) Note: Maximum ADF capacity varies, depending upon paper weight.
Scanning Speed	15 ppm/ 30 ipm (Grayscale mode, 200 dpi, A4 Portrait) 15 ppm/ 30 ipm (B&W mode, 200 dpi, A4 Portrait) 4 ppm/ 8 ipm (Color mode, 200 dpi, A4 Portrait) ---------- 17 ppm/ 34 ipm (Grayscale mode, 200 dpi, Letter, Portrait) 17 ppm/ 34 ipm (B&W mode, 200 dpi, Letter, Portrait) 4 ppm/ 8 ipm (Color mode, 200 dpi, Letter, Portrait)
Scanning Area (W x L)	Max. 216 x 356 mm (8.5" x 14") Min. 13.2 x 13.2 mm (0.52" x 0.52")
Acceptable Paper Sizes (W x L)	Max. 244 x 356 mm (9.6" x 14") Min. 50.8 x 50.8 mm (2" x 2")
Acceptable Paper Weight (Thickness)	40 to 157 g/m² (12 to 40 Lbs)
Daily Duty Scan (Sheets)	1,500
Roller Lifetime (Scans)	300000
Pad Lifetime (Scans)	50000
Power Supply	24Vdc/1.67 A
Network Functions	Scan to Mobile Device Scan to FTP (Supports FTP/SFTP) Scan to USB Scan to PC Scan to Email Scan to Cloud
Interface	USB 2.0 x 1, RJ45 (network connection) x 1
Net Weight	2.8 Kgs (6.17 Lbs)
Dimensions (W x D x H)	318 x 170 x 189 mm (12.53" x 6.69" x 7.45")
Operation Panel	CPU: RK3188 Cortex A9 Quad-core GPU @ 1.6GHz Memory Size: DDR3 1GB Display: 7" 1280x800 pixels with IPS wide view multi-touch screen
Operating Temperature	+ 5 °C to +35°C

[5] Hardware specifications may change at any time without prior notice.

Bundled Software	ABBYY FineReader 9.0 Sprint for Windows NewSoft Presto! PageManager 9 SE for Windows * Members that are using Mac, are require to purchase Mac edition on its respective Official sites for OCR functionality.

APPENDIX B: CUSTOMER SERVICE AND WARRANTY

Please visit our website www.plustek.com for more customer service information. For further assistance, visit our website or call our customer support phone number listed on the website. One of our representatives will be happy to assist you from Monday through Friday in office working hours.

To avoid delays, please have the following information available before calling:

- Scanner name and model number
- Scanner serial number (Located at the bottom of the scanner)
- Scanner CD version and part number
- A detailed description of the problem

SERVICE & SUPPORT INFORMATION

Where appropriate, the period of availability of spare parts and the possibilities of upgrading products information. Please ask local distributors and suppliers for spare parts information and product upgrade information.

Information requested by relevant Implementing Measure. Please ask local distributors and suppliers for the related information of Implementing Measure test report.

Do not dispose anything of products before you ask local distributors and suppliers to get correct information for decreases of environmental impact with right methods and procedures.

If you want to disposals the product and/or an accessory, please ask local distributors and suppliers to get the contact information of nearest disposal manufactures.

If you have any maintenance inquiry, please ask local distributors and suppliers to get the contact information of nearest maintenance center in order to extend the product usage life time.

If you want to maintain and clearance the product, please ask local distributors and suppliers to get the right information of nearest stores.

STATEMENT OF LIMITED WARRANTY

This Statement of Limited Warranty applies only to the options you originally purchase for your use, and not for resale, from an authorized reseller.

The manufacturer warranty includes all parts and labor, and is not valid without the receipt of original purchase. To obtain warranty service, you may contact the authorized dealer or distributor, or visit our website to check out the available service information, or send a request via E-mail for further help.

If you transfer this product to another user, warranty service is available to that user for the remainder of the warranty period. You should give your proof of purchase and this statement to that user.

We warrant that this machine will be in good working order and will conform to its functional descriptions in the documentation provided. Upon provision of proof of purchase, replacement parts assume the remaining warranty of the parts they replace.

Before presenting this product for warranty service, you must remove all programs, data and removable storage media. Products returned without guides and software will be replaced without guides and software.

This Limited Warranty service does not provide for carry-in exchange when the problem results from accident, disaster, vandalism, misuse, abuse, unsuitable environment, program modification, another machine or non-vendor modification for this product.

If this product is an optional feature, this Limited Warranty applies only when the feature is used in a machine for which it was designed.

If you have any questions about your Limited Warranty, contact the approved retailer from whom you bought the product or the manufacturer.

THIS LIMITED WARRANTY REPLACES ALL OTHER WARRANTIES, EXPRESS OR IMPLIED, INCLUDING, BUT NOT LIMITED TO, THE IMPLIED WARRANTIES OF MERCHANTABILITY AND FITNESS FOR A PARTICULAR PURPOSE. HOWEVER, SOME LAWS DO NOT ALLOW THE EXCLUSION OF IMPLIED WARRANTIES. IF THESE LAWS APPLY, THEN ALL EXPRESS AND IMPLIED WARRANTIES ARE LIMITED IN DURATION TO THE WARRANTY PERIOD. NO OTHER WARRANTIES APPLY AFTER THAT PERIOD.

Some jurisdictions do not allow limitations on how long an implied warranty lasts, so the above limitation may not apply.

Under no circumstances are we liable for any of the following:

1. Third party claims against you for losses or damages.
2. Loss of, or damage to, your records or data; or
3. Economic consequential damages (including lost profits or savings) or incidental damages, even if we are informed of their possibility.

Some jurisdictions do not allow the exclusion or limitations of incidental or consequential damages, so the above limitation or exclusion may not apply to you.

This Limited Warranty gives you specific legal rights, and you may also have other rights that vary from jurisdiction to jurisdiction.

FEDERAL COMMUNICATION COMMISSION INTERFERENCE STATEMENT

Note: This equipment has been tested and found to comply with the limits for a Class B digital device, pursuant to part 15 of the FCC Rules. These limits are designed to provide reasonable protection against harmful interference in a residential installation. This equipment generates, uses and can radiate radio frequency energy and, if not installed and used in accordance with the instructions, may cause harmful interference to radio communications. However, there is no guarantee that interference will not occur in a particular installation. If this equipment does cause harmful interference to radio or television reception, which can be determined by turning the equipment off and on, the user is encouraged to try to correct the interference by one or more of the following measures:

—Reorient or relocate the receiving antenna.

—Increase the separation between the equipment and receiver.

—Connect the equipment into an outlet on a circuit different from that to which the receiver is connected.

—Consult the dealer or an experienced radio/TV technician for help.

FCC Caution: Any changes or modifications not expressly approved by the party responsible for compliance could void the user's authority to operate this equipment.

This device complies with Part 15 of the FCC Rules. Operation is subject to the following two conditions: (1) This device may not cause harmful interference, and (2) this device must accept any interference received, including interference that may cause undesired operation.

This device and its antenna(s) must not be co-located or operating in conjunction with any other antenna or transmitter.

IMPORTANT NOTE:

FCC Radiation Exposure Statement:

This equipment complies with FCC radiation exposure limits set forth for an uncontrolled environment. This equipment should be installed and operated with minimum distance 20cm between the radiator & your body.