MEASUREMENT REPORT

FCC PART 15.247

FCC ID:	2AEZB-FZJ202106-24R
Applicant:	Forcome (Shanghai) Co., Ltd.
Application Type:	Certification
Product:	Remote Wireless
Model No.:	FUS-20832000-0006
Serial No.:	FUS-20832000-0033 (I)
Brand Name:	X-POWER
FCC Classification:	Digital Transmission System (DTS)
FCC Rule Part(s):	Part15 Subpart C (Section 15.247)
Test Procedure(s):	ANSI C63.10-2013
Test Date:	June 10 ~ August 16, 2021

Reviewed By:

Sunny Sun

Approved By:

Robin Wu

ACCREDITED
TESTING LABORATORY
CERTIFICATE #3628.01

The test results relate only to the samples tested.

This equipment has been shown to be capable of compliance with the applicable technical standards as indicated in the measurement report and was tested in accordance with the measurement procedures specified in ANSI C63.10-2013. Test results reported herein relate only to the item(s) tested.

The test report shall not be reproduced except in full without the written approval of MRT Technology (Suzhou) Co., Ltd.

Revision History

Report No.	Version	Description	Issue Date	Note
2108RSU043-U1	Rev. 01	Initial Report	11-22-2021	Valid

CONTENTS

Description Page

1. GENERAL INFORMATION 5

1.1. Applicant 5
1.2. Manufacturer 5
1.3. Testing Facility 5
1.4. Product Information 6
1.5. Radio Specification under Test 6
1.6. Working Frequencies for this report 6
1.7. Test Mode 7
1.8. Test Environment Condition 7
1.9. Configuration of Test System 7
1.10. Duty Cycle 8
1.11. EMI Suppression Device(s)/Modifications 8
1.12. Labeling Requirements 9

2. ANTENNA REQUIREMENTS 10

3. TEST EQUIPMENT CALIBRATION DATE 11

4. MEASUREMENT UNCERTAINTY 15

5. TEST RESULT 16

5.1. Summary 16
5.2. Occupied Bandwidth Measurement 17
5.2.1. Test Limit 17
5.2.2. Test Procedure used 17
5.2.3. Test Setting 17
5.2.4. Test Setup 17
5.2.5. Test Result 18
5.3. Output Power Measurement 19
5.3.1. Test Limit 19
5.3.2. Test Procedure Used 19
5.3.3. Test Setting 19
5.3.4. Test Setup 20
5.3.5. Test Result 21
5.4. Power Spectral Density Measurement 22
5.4.1. Test Limit 22
5.4.2. Test Procedure Used 22
5.4.3. Test Setting 22
5.4.4. Test Setup 22

5.4.5. Test Result 23
5.5. Conducted Band Edge and Out-of-Band Emissions 24
5.5.1. Test Limit 24
5.5.2. Test Procedure Used 24
5.5.3. Test Setting 24
5.5.4. Test Setup 25
5.5.5. Test Result 26
5.6. Radiated Spurious Emission Measurement 28
5.6.1. Test Limit 28
5.6.2. Test Procedure Used 28
5.6.3. Test Setting 28
5.6.4. Test Setup 30
5.6.5. Test Result 31
5.7. Radiated Restricted Band Edge Measurement 34
5.7.1. Test Limit 34
5.7.2. Test Procedure Used 35
5.7.3. Test Setting 35
5.7.4. Test Setup 36
5.7.5. Test Result 37
5.8. AC Conducted Emissions Measurement 45
5.8.1. Test Limit 45
5.8.2. Test Setup 45
5.8.3. Test Result 45

6. CONCLUSION 46

Appendix A - Test Setup Photograph 47

Appendix B - EUT Photograph 48

1. GENERAL INFORMATION

1.1. Applicant

Forcome (Shanghai) Co., Ltd.

Building 109, No. 255, South Sizhuan Road, Shanghai, 201612, China

1.2. Manufacturer

Forcome (Shanghai) Co., Ltd.

Building 109, No. 255, South Sizhuan Road, Shanghai, 201612, China

1.3. Testing Facility

☒	**Test Site – MRT Suzhou Laboratory**				
	Laboratory Location (Suzhou - Wuzhong) D8 Building, No.2 Tian'edang Rd., Wuzhong Economic Development Zone, Suzhou, China **Laboratory Location (Suzhou - SIP)** 4b Building, Liando U Valley, No.200 Xingpu Rd., Shengpu Town, Suzhou Industrial Park, China				
	Laboratory Accreditations				
	A2LA: 3628.01		CNAS: L10551		
	FCC: CN1166		ISED: CN0001		
	VCCI:	☐R-20025	☐G-20034	☐C-20020	☐T-20020
		☐R-20141	☐G-20134	☐C-20103	☐T-20104
☐	**Test Site – MRT Shenzhen Laboratory**				
	Laboratory Location (Shenzhen) 1G, Building A, Junxiangda Building, Zhongshanyuan Road West, Nanshan District, Shenzhen, China				
	Laboratory Accreditations				
	A2LA: 3628.02		CNAS: L10551		
	FCC: CN1284		ISED: CN0105		
☐	**Test Site – MRT Taiwan Laboratory**				
	Laboratory Location (Taiwan) No. 38, Fuxing 2nd Rd., Guishan Dist., Taoyuan City 333, Taiwan (R.O.C.)				
	Laboratory Accreditations				
	TAF: L3261-190725				
	FCC: 291082, TW3261		ISED: TW3261		

1.4. Product Information

Product Name	Remote Wireless
Model No.	FUS-20832000-0006
Serial No.	FUS-20832000-0033 (I)
Brand Name	X-POWER
Frequency Range	2400MHz ~ 2482MHz
Hardware Version	Y 1.0
Software Version	RJ 1.0
Power By	11.5 Vdc
Remark: 1. The only differene between the two models is different feedback signal encoding, FUS-20832000-0006 is for ratation direction,. FUS-20832000-0033 (I) is for overcurrent signal. All test items were performed for model FUS-20832000-0006. 2: The information of EUT was provided by the manufacturer, and the accuracy of the information shall be the responsibility of the manufacturer.	

1.5. Radio Specification under Test

Frequency Range	2400MHz ~ 2482MHz
Channel Numbers	15
Type of Modulation	GFSK
Antenna Type	PCB Antenna
Antenna Gain	-1.4dBi
Data Rate	1Mbps

1.6. Working Frequencies for this report

Channel	Frequency	Channel	Frequency	Channel	Frequency
00	2402 MHz	01	2407 MHz	02	2412 MHz
03	2417 MHz	04	2422 MHz	05	2427 MHz
06	2432 MHz	07	2437 MHz	08	2442 MHz
09	2447 MHz	10	2452 MHz	11	2457 MHz
12	2462 MHz	13	2467 MHz	14	2472 MHz

1.7. Test Mode

Test Mode	Mode 1: Transmit at Channel 2402MHz
	Mode 2: Transmit at Channel 2437MHz
	Mode 3: Transmit at Channel 2472MHz

1.8. Test Environment Condition

Ambient Temperature	15°C ~ 35°C
Relative Humidity	20%RH ~ 75%RH

1.9. Configuration of Test System

The device was tested per the guidance ANSI C63.10: 2013 was used to reference the appropriate EUT setup for radiated emissions testing.

Connection Diagram – Radiated Emission testing

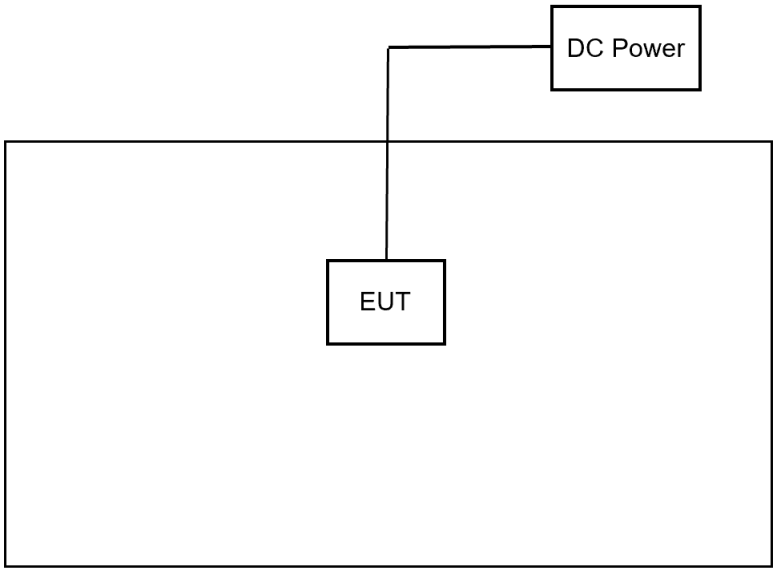

1.10. Duty Cycle

The maximum achievable duty cycles were determined based on measurements performed on a spectrum analyzer in zero-span mode with RBW = 8MHz, VBW = 50MHz. The RBW and VBW were both greater than 50/T, where T is the minimum transmission duration, and the number of sweep points across T was greater than 100. The duty cycles are as follows:

Test Mode	Duty Cycle
Mode 1	100%

Duty Cycle (T = Transmission Duration)	
Mode 1	
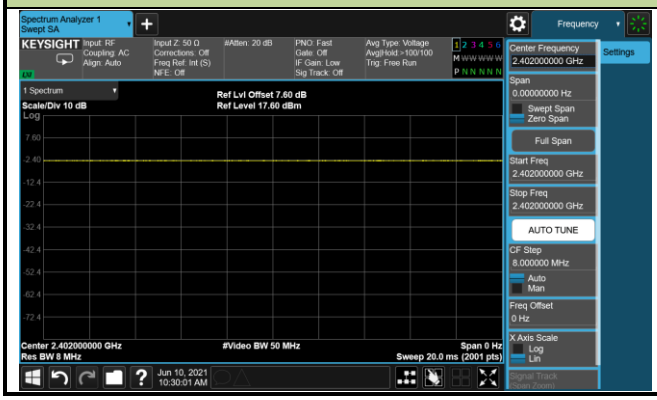	

1.11. EMI Suppression Device(s)/Modifications

No EMI suppression device(s) were added and/or no modifications were made during testing.

1.12. Labeling Requirements

Per 2.1074 & 15.19; Docket 95-19

The label shall be permanently affixed at a conspicuous location on the device; instruction manual or pamphlet supplied to the user and be readily visible to the purchaser at the time of purchase. However, when the device is so small wherein placement of the label with specified statement is not practical, only the FCC ID must be displayed on the device per Section 15.19(a)(5). Please see attachment for FCC ID label and label location.

2. ANTENNA REQUIREMENTS

Excerpt from §15.203 of the FCC Rules/Regulations:

"An intentional radiator antenna shall be designed to ensure that no antenna other than that furnished by the responsible party can be used with the device. The use of a permanently attached antenna or of an antenna that uses a unique coupling to the intentional radiator shall be considered sufficient to comply with the provisions of this section."

- The antenna of the device is permanently attached.
- There are no provisions for connection to an external antenna.

Conclusion:

The unit complies with the requirement of §15.203.

3. TEST EQUIPMENT CALIBRATION DATE

Conducted Emission (WZ-SR2)

Instrument	Manufacturer	Type No.	Asset No.	Cali. Interval	Cali. Due Date
EMI Test Receiver	R&S	ESR3	MRTSUE06185	1 year	2022/01/12
Two-Line V-Network	R&S	ENV216	MRTSUE06002	1 year	2021/09/09
Thermal Hygrometer	testo	608-H1	MRTSUE06404	1 year	2022/06/28
Shielding Room	MIX-BEP	Chamber-SR2	MRTSUE06215	N/A	N/A

Conducted Emission (SIP-SR2)

Instrument	Manufacturer	Type No.	Asset No.	Cali. Interval	Cali. Due Date
EMI Test Receiver	R&S	ESR3	MRTSUE06613	1 year	2022/06/24
Two-Line V-Network	R&S	ENV216	MRTSUE06003	1 year	2021/09/09
Thermal Hygrometer	testo	608-H1	MRTSUE06621	1 year	2021/12/03

Radiated Emission (WZ-AC1)

Instrument	Manufacturer	Type No.	Asset No.	Cali. Interval	Cali. Due Date
EMI Test Receiver	R&S	ESR7	MRTSUE06001	1 year	2022/01/04
PXA Signal Analyzer	Keysight	N9030B	MRTSUE06395	1 year	2022/08/08
Loop Antenna	Schwarzbeck	FMZB 1519	MRTSUE06025	1 year	2021/11/08
Bilog Period Antenna	Schwarzbeck	VULB 9168	MRTSUE06172	1 year	2022/08/05
Horn Antenna	Schwarzbeck	BBHA 9120D	MRTSUE06023	1 year	2021/09/27
Horn Antenna	Schwarzbeck	BBHA9170	MRTSUE06597	1 year	2021/12/14
Microwave System Amplifier	Agilent	83017A	MRTSUE06076	1 year	2021/11/14
Preamplifier	Schwarzbeck	BBV 9721	MRTSUE06121	1 year	2022/06/09
Thermal Hygrometer	testo	608-H1	MRTSUE06403	1 year	2022/06/28
Anechoic Chamber	TDK	Chamber-AC1	MRTSUE06212	1 year	2022/04/29

Radiated Emission (WZ-AC2)

Instrument	Manufacturer	Type No.	Asset No.	Cali. Interval	Cali. Due Date
MXE EMI Receiver	Keysight	N9038A	MRTSUE06125	1 year	2022/06/24
Loop Antenna	Schwarzbeck	FMZB 1519	MRTSUE06025	1 year	2021/11/08
Bilog Period Antenna	Schwarzbeck	VULB 9162	MRTSUE06022	1 year	2022/05/24
Broad-Band Horn Antenna	Schwarzbeck	BBHA 9120D	MRTSUE06171	1 year	2021/10/25
Horn Antenna	Schwarzbeck	BBHA9170	MRTSUE06597	1 year	2021/12/14
Broadband Coaxial Preamplifier	Schwarzbeck	BBV 9718	MRTSUE06176	1 year	2021/11/14
Preamplifier	Schwarzbeck	BBV 9721	MRTSUE06121	1 year	2022/06/09
Thermal Hygrometer	Minggao	ETH529	MRTSUE06170	1 year	2021/12/08
Anechoic Chamber	RIKEN	Chamber-AC2	MRTSUE06213	1 year	2022/04/29

Radiated Emission (SIP-AC1)

Instrument	Manufacturer	Type No.	Asset No.	Cali. Interval	Cali. Due Date
EMI Test Receiver	R&S	ESR3	MRTSUE06612	1 year	2022/06/24
EXA Signal Analyzer	Keysight	N9010B	MRTSUE06559	1 year	2022/06/24
Loop Antenna	Schwarzbeck	FMZB 1519	MRTSUE06025	1 year	2021/11/08
Bilog Period Antenna	Schwarzbeck	VULB9168	MRTSUE06645	1 year	2022/08/26
Double Ridged Horn Antenna	R&S	HF907	MRTSUE06610	1 year	2022/08/05
Preamplifier	EMCI	EMC051845SE	MRTSUE06600	1 year	2021/11/09
Thermal Hygrometer	testo	608-H1	MRTSUE06620	1 year	2021/12/03
Anechoic Chamber	RIKEN	SIP-AC1	MRTSUE06554	1 year	2021/12/24

Radiated Emission (SIP-AC2)

Instrument	Manufacturer	Type No.	Asset No.	Cali. Interval	Cali. Due Date
EMI Test Receiver	R&S	ESR3	MRTSUE06613	1 year	2022/06/24
MXA Signal Analyzer	Keysight	N9020B	MRTSUE06604	1 year	2021/09/26
Loop Antenna	Schwarzbeck	FMZB 1519	MRTSUE06025	1 year	2021/11/08
Bilog Period Antenna	Schwarzbeck	VULB9168	MRTSUE06646	1 year	2022/08/26
Horn Antenna	Schwarzbeck	BBHA9120D	MRTSUE06648	1 year	2021/11/26
Horn Antenna	Schwarzbeck	BBHA9170	MRTSUE06599	1 year	2021/11/26
Preamplifier	EMCI	EMC051845SE	MRTSUE06644	1 year	2021/11/09
Preamplifier	EMCI	EMC184045SE	MRTSUE06602	1 year	2021/10/12
Thermal Hygrometer	testo	608-H1	MRTSUE06624	1 year	2021/12/03
Anechoic Chamber	RIKEN	SIP-AC2	MRTSUE06781	1 year	2021/12/24

Radiated Emission (SIP-AC3)

Instrument	Manufacturer	Type No.	Asset No.	Cali. Interval	Cali. Due Date
EMI Test Receiver	R&S	ESR3	MRTSUE06612	1 year	2022/06/24
EXA Signal Analyzer	Keysight	N9010B	MRTSUE06559	1 year	2022/06/24
Loop Antenna	Schwarzbeck	FMZB 1519	MRTSUE06025	1 year	2021/11/08
Bilog Period Antenna	Schwarzbeck	VULB9168	MRTSUE06647	1 year	2022/08/05
Double Ridged Horn Antenna	R&S	HF907	MRTSUE06611	1 year	2021/09/13
Horn Antenna	Schwarzbeck	BBHA9170	MRTSUE06598	1 year	2021/11/26
Preamplifier	EMCI	EMC012645SE	MRTSUE06642	1 year	2022/01/15
Preamplifier	EMCI	EMC184045SE	MRTSUE06641	1 year	2022/01/15
Thermal Hygrometer	testo	608-H1	MRTSUE06622	1 year	2021/12/03
Anechoic Chamber	RIKEN	SIP-AC3	MRTSUE06782	1 year	2021/12/24

Conducted Test Equipment (WZ-TR3)

Instrument	Manufacturer	Type No.	Asset No.	Cali. Interval	Cali. Due Date
EXA Signal Analyzer	Agilent	N9020A	MRTSUE06106	1 year	2022/04/13
EXA Signal Analyzer	Keysight	N9010B	MRTSUE06607	1 year	2022/01/06
Signal Analyzer	R&S	FSV40	MRTSUE06218	1 year	2022/04/13
Power Meter	Agilent	U2021XA	MRTSUE06030	1 year	2021/10/22
USB wideband power sensor	Keysight	U2021XA	MRTSUE06446	1 year	2022/06/08
USB wideband power sensor	Keysight	U2021XA	MRTSUE06447	1 year	2022/06/08
Bluetooth Test Set	Anritsu	MT8852B-042	MRTSUE06389	1 year	2022/06/08
Audio Analyzer	Agilent	U8903B	MRTSUE06143	1 year	2022/05/19
Modulation Analyzer	HP	HP8901A	MRTSUE06098	1 year	2021/09/26
Wideband Radio Communication Tester	R&S	CMW 500	MRTSUE06243	1 year	2021/10/20
DC Power Supply	GWINSTEK	DPS-3303C	MRTSUE06064	N/A	N/A
Temperature & Humidity Chamber	BAOYT	BYH-150CL	MRTSUE06051	1 year	2021/10/22
Thermal Hygrometer	testo	608-H1	MRTSUE06401	1 year	2022/06/28

Conducted Test Equipment (SIP-SR5)

Instrument	Manufacturer	Type No.	Asset No.	Cali. Interval	Cali. Due Date
Signal Analyzer	R&S	FSV40	MRTSUE06218	1 year	2022/04/13
PXA Signal Analyzer	Keysight	N9030B	MRTSUE06395	1 year	2022/08/08
USB wideband power sensor	Agilent	U2021XA	MRTSUE06595	1 year	2021/09/26
USB wideband power sensor	Agilent	U2021XA	MRTSUE06596	1 year	2021/09/26
Wideband Radio Communication Tester	R&S	CMW 500	MRTSUE06243	1 year	2021/10/20
Bluetooth Test Set	Anritsu	MT8852B-042	MRTSUE06389	1 year	2022/06/08
Temperature Chamber	BAOYT	BYG-408CS	MRTSUE06847	1 year	2022/02/23
Thermal Hygrometer	testo	622	MRTSUE06629	1 year	2021/11/25

Software	Version	Function
EMI Software	V3	EMI Test Software

4. MEASUREMENT UNCERTAINTY

Where relevant, the following test uncertainty levels have been estimated for tests performed on the EUT as specified in CISPR 16-4-2. This uncertainty represents an expanded uncertainty expressed at approximately the 95% confidence level using a coverage factor of k = 2.

Conducted Emission Measurement
Measurement Uncertainty for a Level of Confidence of 95% (U=2Uc(y)): 9kHz~150kHz: 3.74dB 150kHz~30MHz: 3.44dB
Radiated Disturbance
Measurement Uncertainty for a Level of Confidence of 95% (U=2Uc(y)): Horizontal: 9KHz~300MHz: 5.04dB 300MHz~1GHz: 4.95dB 1GHz~6GHz: 6.40dB Vertical: 9KHz~300MHz: 5.24dB 300MHz~1GHz: 6.03dB 1GHz~40GHz: 6.40dB
Spurious Emissions, Conducted
Measuring Uncertainty for a Level of Confidence of 95% (U=2Uc(y)): 0.78dB
Output Power
Measuring Uncertainty for a Level of Confidence of 95% (U=2Uc(y)): 1.13dB
Power Spectrum Density
Measuring Uncertainty for a Level of Confidence of 95% (U=2Uc(y)): 1.15dB
Occupied Bandwidth
Measuring Uncertainty for a Level of Confidence of 95% (U=2Uc(y)): 0.28%

5. TEST RESULT

5.1. Summary

FCC Section(s)	Test Description	Test Condition	Test Result	Reference
15.247(a)(2)	6dB Bandwidth	Conducted	Pass	Section 5.2
15.247(b)(3)	Output Power		Pass	Section 5.3
15.247(e)	Power Spectral Density		Pass	Section 5.4
15.247(d)	Band Edge / Out-of-Band Emissions		Pass	Section 5.5
15.205 15.209	General Field Strength Limits (Restricted Bands and Radiated Emission Limits)	Radiated	Pass	Section 5.6 & 5.7
15.207	AC Conducted Emissions 150kHz - 30MHz	Line Conducted	Pass	Section 5.8

Notes:

1) For radiated emission test, every axis (X, Y, Z) was also verified. The test results shown in the following sections represent the worst-case emissions.
2) The analyzer plots shown in this section were all taken with a correction table loaded into the analyzer. The correction table was used to account for the losses of the cables and attenuators used as part of the system to connect the EUT to the analyzer at all frequencies of interest.
3) “N/A” means that the test item is not applicable, and the details refer to relevant section.

5.2. Occupied Bandwidth Measurement

5.2.1.Test Limit

The minimum 6dB bandwidth shall be at least 500 kHz.

5.2.2.Test Procedure used

ANSI C63.10-2013 - Section 11.8 (6dB bandwidth)

5.2.3.Test Setting

For 6dB bandwidth

1. The Spectrum's automatic bandwidth measurement capability was used to perform the 6dB bandwidth measurement. The "X" dB bandwidth parameter was set to X = 6. The bandwidth measurement was not influenced by any intermediate power nulls in the fundamental emission.
2. Set RBW = 100 kHz
3. VBW ≥ 3 × RBW
4. Detector = Peak
5. Trace mode = Max hold
6. Sweep = Auto couple
7. Allow the trace was allowed to stabilize

5.2.4.Test Setup

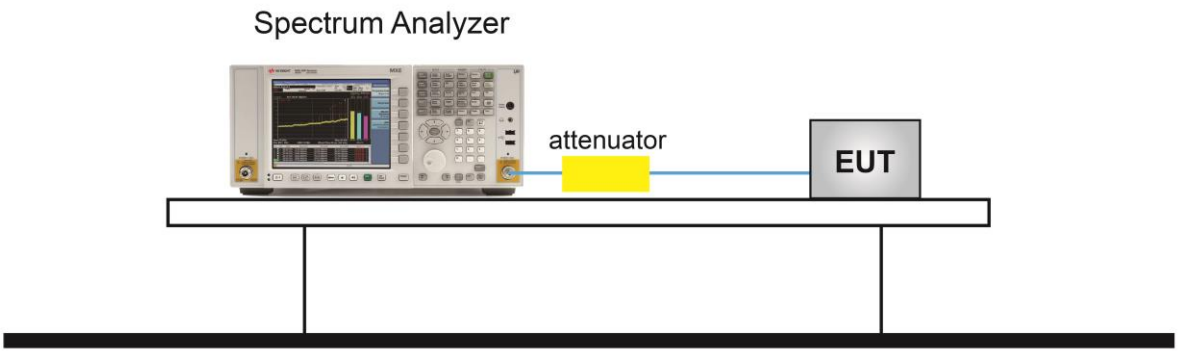

5.2.5.Test Result

Test Site	WZ-SR4	Test Engineer	Yuri Li
Test Date	2021/08/16		

Test Mode	Channel No.	Frequency (MHz)	6dB Bandwidth (KHz)	Limit (kHz)	Result
Mode 1	00	2402	977.7	≥ 500	Pass
Mode 2	07	2437	1509.0	≥ 500	Pass
Mode 3	14	2472	1537.0	≥ 500	Pass

6dB Bandwidth

Channel 00 (2402MHz)

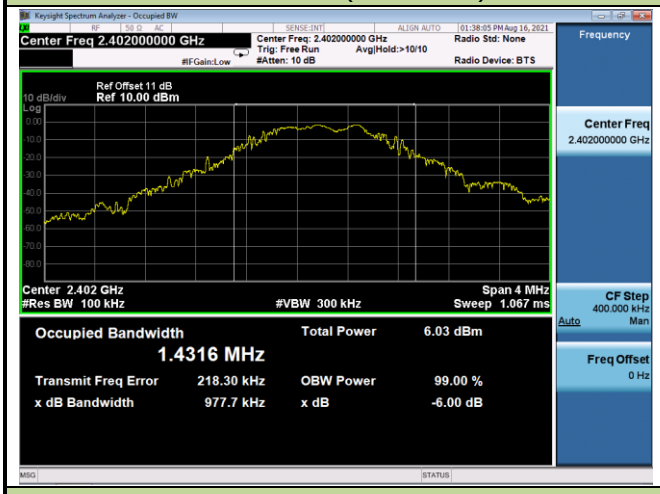

Channel 07 (2437MHz)

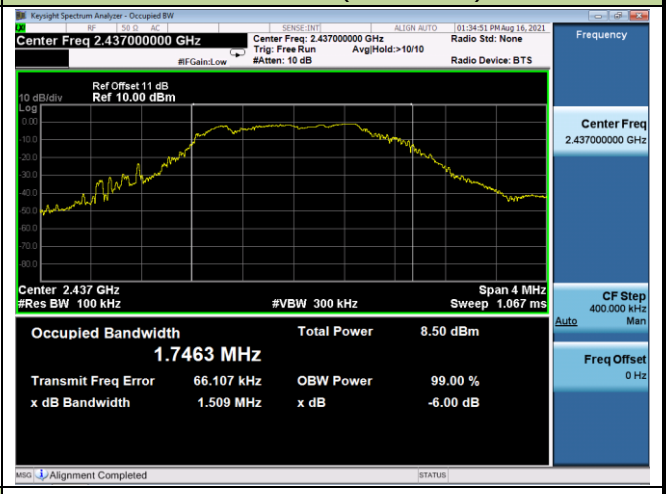

Channel 14 (2472MHz)

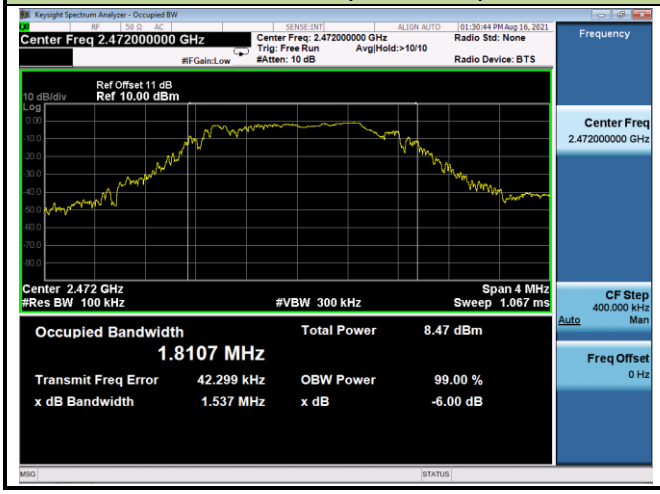

5.3. Output Power Measurement

5.3.1.Test Limit

The maximum output power shall be less 1 Watt (30dBm).

The conducted output power limit specified in paragraph FCC Part 15.247(b) of this section is based on the use of antennas with directional gains that do not exceed 6 dBi. If transmitting antennas of directional gain greater than 6 dBi are used, the conducted output power from the intentional radiator shall be reduced below the stated values in paragraphs FCC Part 15.247(b)(3) of this section, as appropriate, by the amount in dB that the directional gain of the antenna exceeds 6 dBi.

5.3.2.Test Procedure Used

ANSI C63.10-2013 - Section 11.9.1.3 PKPM1 Peak-reading power meter method

ANSI C63.10-2013 - Section 11.9.2.3.2 Method AVGPM-G

5.3.3.Test Setting

Method PKPM1 (Peak power measurement)

Peak power measurements were performed only when the EUT was transmitting at its maximum power control level using a broadband power meter with a pulse sensor. The pulse sensor employs a VBW = 50MHz so this method was only used for signals whose DTS bandwidth was less than or equal to 50MHz.

Method AVGPM-G (Measurement using a gated RF average-reading power meter)

Measurements may be performed using a wideband gated RF power meter provided that the gate parameters are adjusted such that the power is measured only when the EUT is transmitting at its maximum power control level. Since this measurement is made only during the ON time of the transmitter, no duty cycle correction is required.

5.3.4.Test Setup

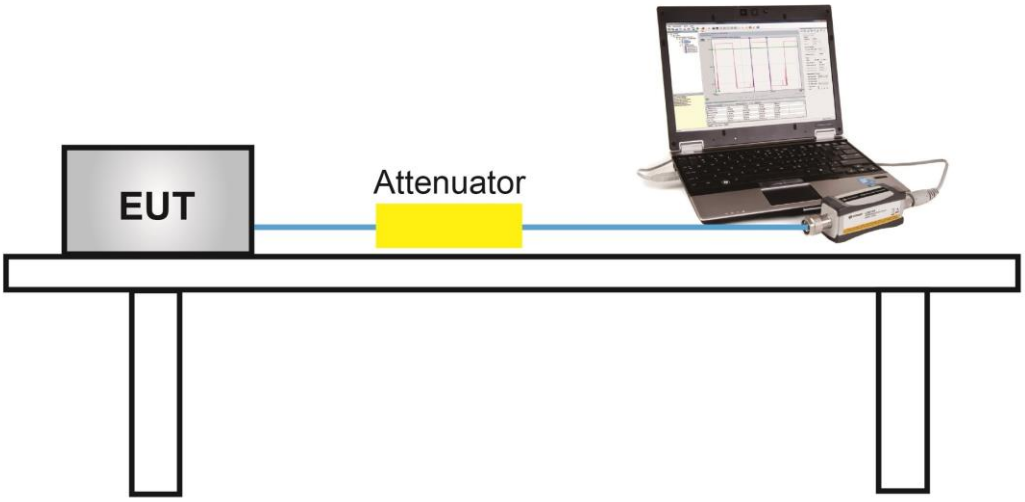

5.3.5.Test Result

Test Site	WZ-TR3	Test Engineer	Luis Yang
Test Date	2021/06/10		

Test Mode	Channel No.	Frequency (MHz)	Output Power (dBm)	Limit (dBm)	Result
Peak Output Power					
Mode 1	00	2402	-2.08	≤ 30.00	Pass
Mode 2	07	2437	-1.67	≤ 30.00	Pass
Mode 3	14	2472	-1.39	≤ 30.00	Pass
Average Output Power					
Mode 1	00	2402	-2.20	≤ 30.00	Pass
Mode 2	07	2437	-1.81	≤ 30.00	Pass
Mode 3	14	2472	-1.58	≤ 30.00	Pass

5.4. Power Spectral Density Measurement

5.4.1.Test Limit

The maximum permissible power spectral density is 8dBm in any 3 kHz band.

The same method of determining the conducted output power shall be used to determine the power spectral density.

5.4.2.Test Procedure Used

ANSI C63.10-2013 - Section 11.10.2.

5.4.3.Test Setting

1. Analyzer was set to the center frequency of the DTS channel under investigation
2. Span = 1.5 times the DTS channel bandwidth
3. RBW = 3kHz
4. VBW = 10kHz
5. Detector = peak
6. Sweep time = auto couple
7. Trace mode = max hold
8. Trace was allowed to stabilize

5.4.4.Test Setup

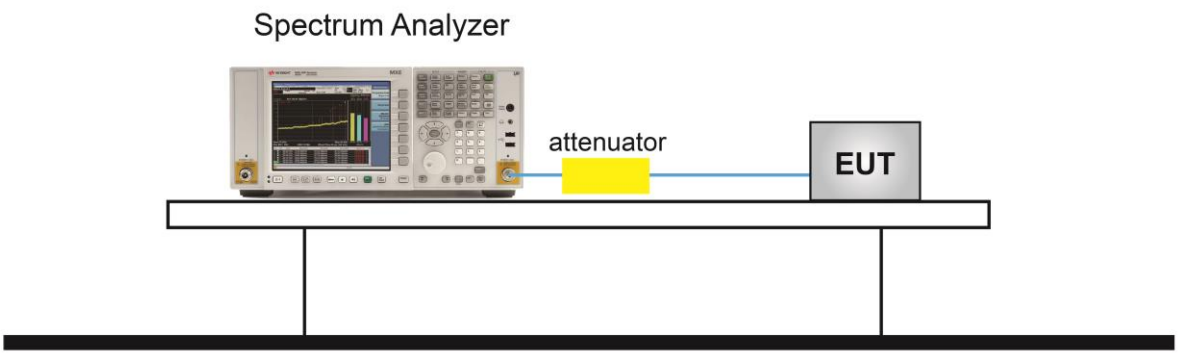

5.4.5.Test Result

Test Site	WZ-SR4	Test Engineer	Yuri Li
Test Date	2021/08/16		

Test Mode	Channel No.	Frequency (MHz)	PSD Result (dBm / 3kHz)	Limit (dBm / 3kHz)	Result
Mode 1	00	2402	-13.18	≤ 8.00	Pass
Mode 2	07	2437	-13.55	≤ 8.00	Pass
Mode 3	14	2472	-13.33	≤ 8.00	Pass

PSD

Channel 00 (2402MHz)

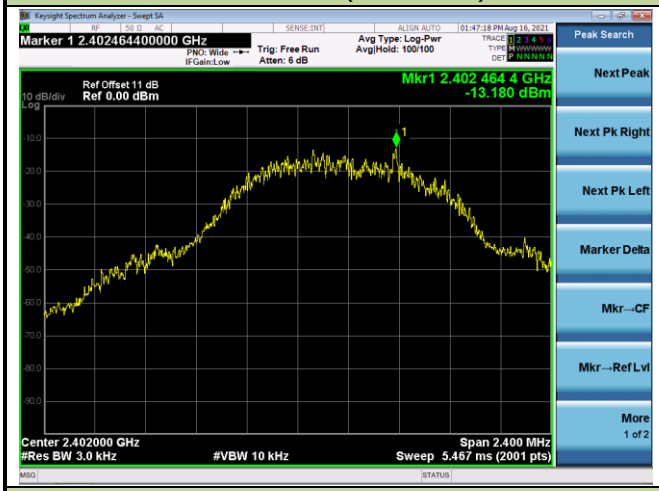

Channel 07 (2437MHz)

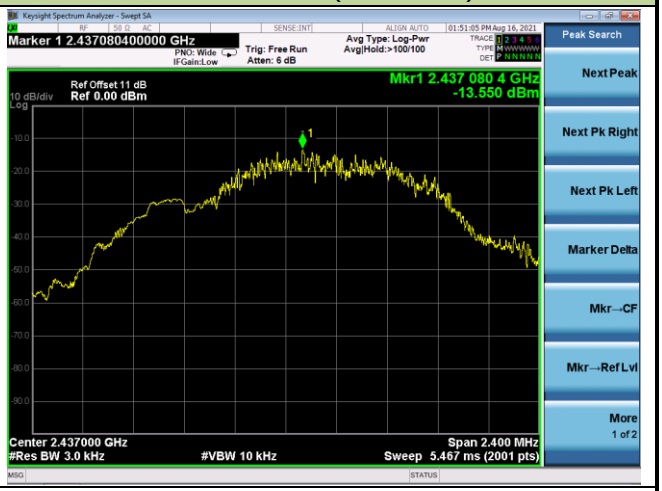

Channel 14 (2472MHz)

5.5. Conducted Band Edge and Out-of-Band Emissions

5.5.1.Test Limit

The limit for out-of-band spurious emissions at the band edge is 20dB below the fundamental emission level, as determined from the in-band power measurement of the DTS channel performed in a 100 kHz bandwidth per the PSD procedure.

5.5.2.Test Procedure Used

ANSI C63.10-2013 - Section 11.11.2 & 11.11.3.

5.5.3.Test Setting

Reference level measurement

1. Set instrument center frequency to DTS channel center frequency
2. Set the span to ≥ 1.5 times the DTS bandwidth
3. Set the RBW = 100 kHz
4. Set the VBW ≥ 3 x RBW
5. Detector = peak
6. Sweep time = auto couple
7. Trace mode = max hold
8. Allow trace to fully stabilize

Emission level measurement

1. Set the center frequency and span to encompass frequency range to be measured
2. RBW = 100kHz
3. VBW = 300KHz
4. Detector = Peak
5. Trace mode = max hold
6. Sweep time = auto couple
7. The trace was allowed to stabilize

5.5.4.Test Setup

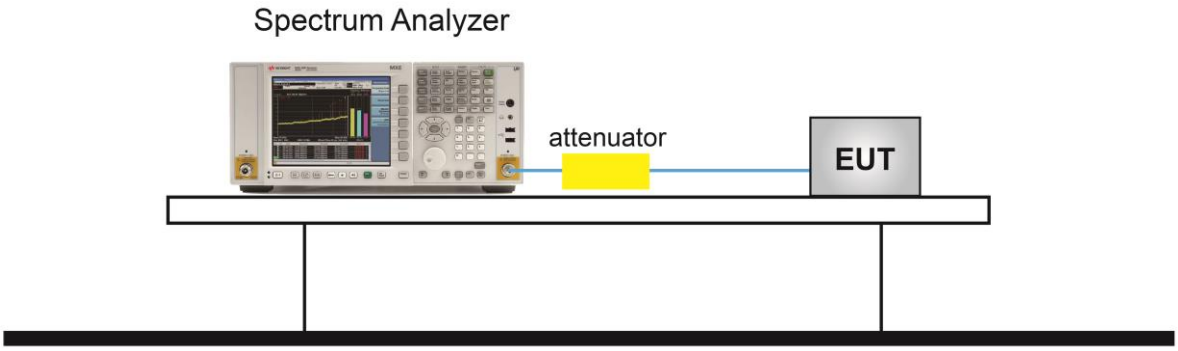

5.5.5.Test Result

Test Site	WZ-SR4	Test Engineer	Yuri Li
Test Date	2021/08/16		

Test Mode	Channel No.	Frequency (MHz)	Limit (dBc)	Result
Mode 1	00	2402	20	Pass
Mode 2	07	2437	20	Pass
Mode 3	14	2472	20	Pass

Out-of-Band Emissions	
Channel 00 (2402MHz)	
100kHz PSD Reference Level	Low Band Edge
Spurious Emission 30MHz ~ 25GHz	
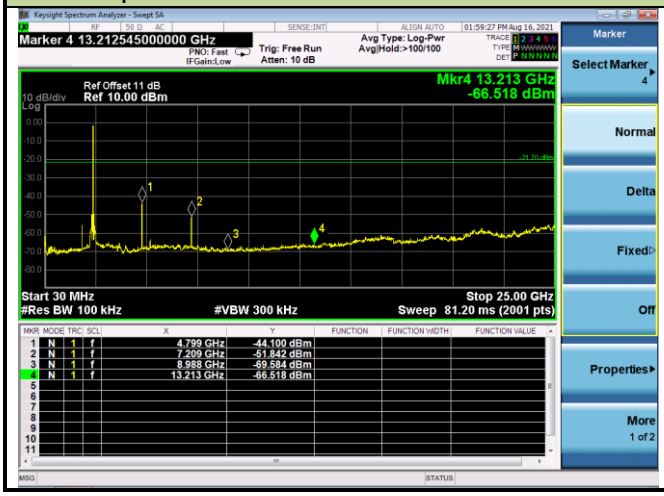	

Channel 07 (2437MHz)

100kHz PSD Reference Level

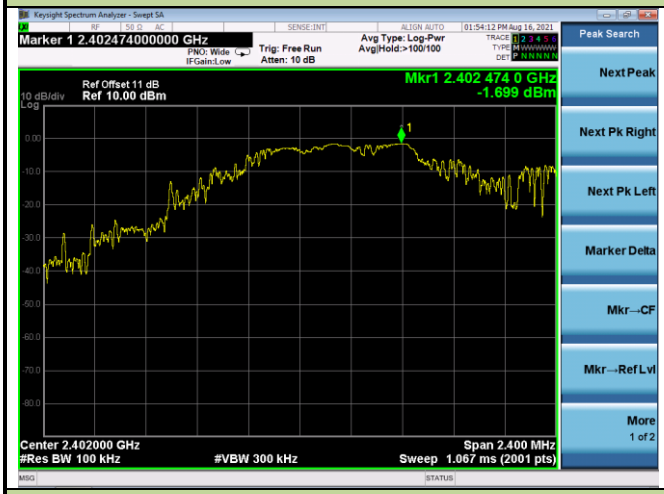

Spurious Emission 30MHz ~ 25GHz

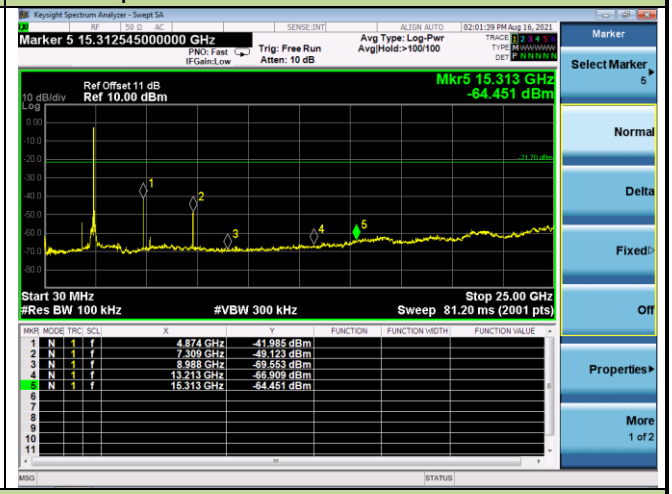

Channel 14 (2472MHz)

100kHz PSD Reference Level

High Band Edge

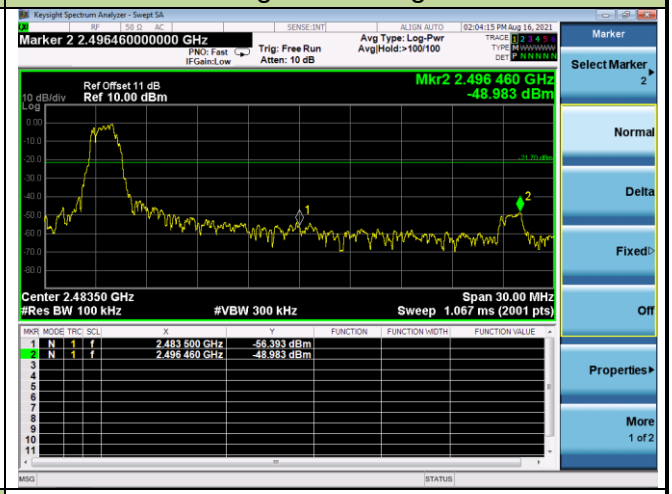

Spurious Emission 30MHz ~ 25GHz

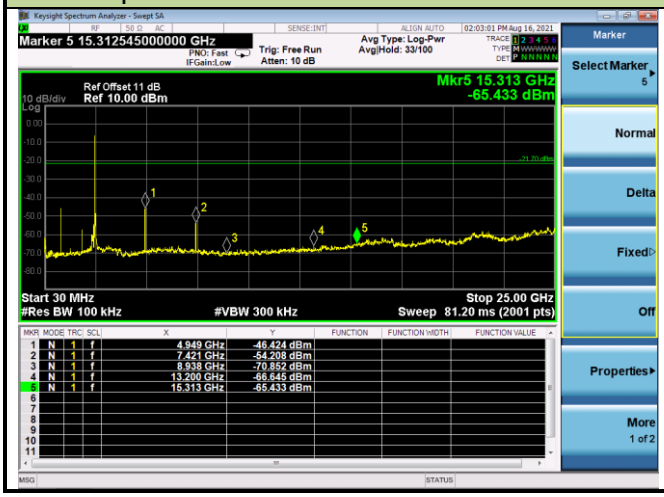

5.6. Radiated Spurious Emission Measurement

5.6.1.Test Limit

All out of band emissions appearing in a restricted band as specified in Section 15.205 of the Title 47CFR must not exceed the limits shown in Table per Section 15.209.

FCC Part 15 Subpart C Paragraph 15.209		
Frequency [MHz]	Field Strength [uV/m]	Measured Distance [Meters]
0.009 - 0.490	2400/F (kHz)	300
0.490 - 1.705	24000/F (kHz)	30
1.705 - 30	30	30
30 - 88	100	3
88 - 216	150	3
216 - 960	200	3
Above 960	500	3

5.6.2.Test Procedure Used

ANSI C63.10 Section 6.3 (General Requirements)

ANSI C63.10 Section 6.4 (Standard test method below 30MHz)

ANSI C63.10 Section 6.5 (Standard test method above 30MHz to 1GHz)

ANSI C63.10 Section 6.6 (Standard test method above 1GHz)

5.6.3.Test Setting

Table 1 - RBW as a function of frequency

Frequency	RBW
9 ~ 150 kHz	200 ~ 300 Hz
0.15 ~ 30 MHz	9 ~ 10 kHz
30 ~ 1000 MHz	100 ~ 120 kHz
> 1000 MHz	1 MHz

Quasi-Peak Measurements below 1GHz

1. Analyzer center frequency was set to the frequency of the radiated spurious emission of interest

2. Span was set greater than 1MHz

3. RBW = as specified in Table 1

4. Detector = CISPR quasi-peak

5. Sweep time = auto couple

6. Trace was allowed to stabilize

Peak Measurements above 1GHz

1. Analyzer center frequency was set to the frequency of the radiated spurious emission of interest

2. RBW = 1MHz

3. VBW = 3MHz

4. Detector = peak

5. Sweep time = auto couple

6. Trace mode = max hold

7. Trace was allowed to stabilize

Average Measurements above 1GHz (Method VB)

1. Analyzer center frequency was set to the frequency of the radiated spurious emission of interest

2. RBW = 1MHz

3. VBW; If the EUT is configured to transmit with duty cycle ≥ 98%, set VBW = 10 Hz.

If the EUT duty cycle is < 98%, set VBW ≥ 1/T. T is the minimum transmission duration.

4. Detector = Peak

5. Sweep time = auto

6. Trace mode = max hold

7. Trace was allowed to stabilize

5.6.4.Test Setup

Below 1GHz Test Setup:

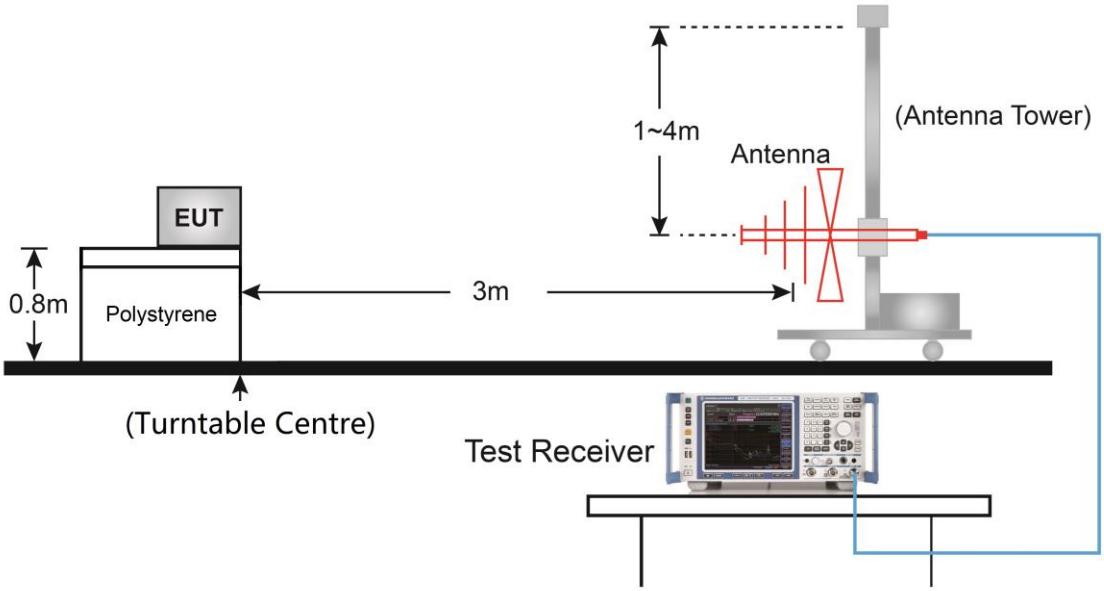

Above 1GHz Test Setup:

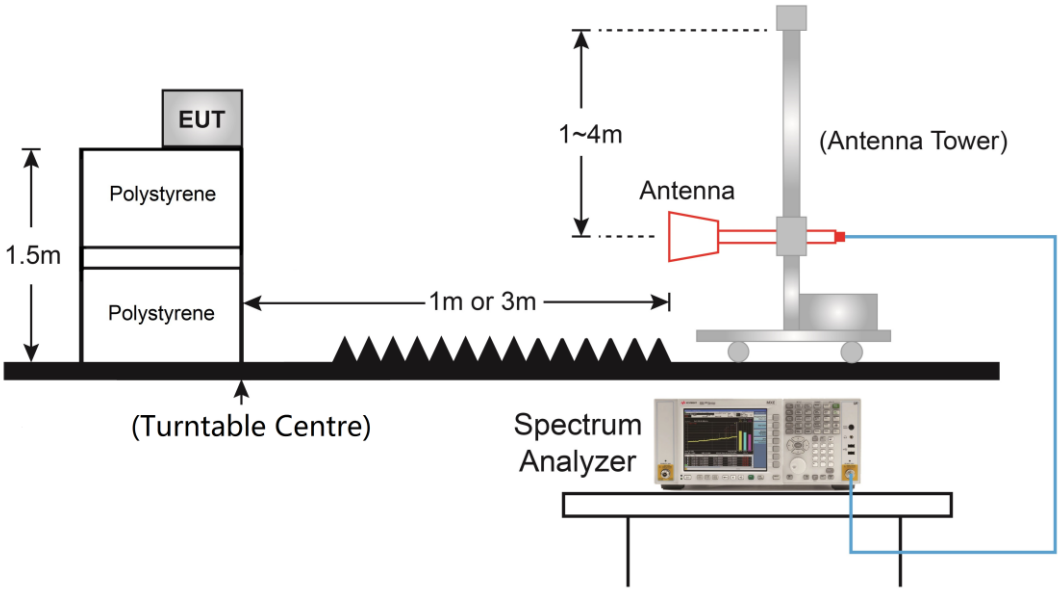

5.6.5.Test Result

Test Site	WZ-AC1	Test Engineer	Tommy Tang
Test Date	2021/06/10	Test Mode	Mode 1
Remark:	1. Average measurement was not performed if peak level lower than average limit. 2. Other frequency was 20dB below limit line within 1-18GHz, there is not shown in the report.		

Frequency (MHz)	Reading Level (dBμV)	Factor (dB/m)	Measure Level (dBμV/m)	Limit (dBμV/m)	Margin (dB)	Detector	Polarization
Channel 00							
4808.0	49.2	3.5	52.7	74.0	-21.3	Peak	Horizontal
4808.0	46.5	3.5	50.0	54.0	-4.0	Average	Horizontal
7511.0	39.5	8.6	48.1	74.0	-25.9	Peak	Horizontal
8361.0	37.7	9.0	46.7	74.0	-27.3	Peak	Horizontal
4808.0	47.5	3.5	51.0	74.0	-23.0	Peak	Vertical
7613.0	39.4	8.3	47.7	74.0	-26.3	Peak	Vertical
8089.0	39.1	9.2	48.3	74.0	-25.7	Peak	Vertical
Channel 07							
4876.0	46.6	3.5	50.1	74.0	-23.9	Peak	Horizontal
7307.0	43.4	8.5	51.9	74.0	-22.1	Peak	Horizontal
8463.0	38.4	9.3	47.7	74.0	-26.3	Peak	Horizontal
4876.0	44.5	3.5	48.0	74.0	-26.0	Peak	Vertical
7315.5	42.3	8.6	50.9	74.0	-23.1	Peak	Vertical
8148.5	38.6	9.2	47.8	74.0	-26.2	Peak	Vertical
Channel 14							
4944.0	44.8	3.7	48.5	74.0	-25.5	Peak	Horizontal
7417.5	43.0	8.6	51.6	74.0	-22.4	Peak	Horizontal
8480.0	38.6	9.3	47.9	74.0	-26.1	Peak	Horizontal
4944.0	46.4	3.7	50.1	74.0	-23.9	Peak	Vertical
7417.5	44.5	8.6	53.1	74.0	-20.9	Peak	Vertical
7417.5	40.3	8.6	48.9	54.0	-5.1	Average	Vertical
8165.5	38.1	9.1	47.2	74.0	-26.8	Peak	Vertical

Note: Measure Level (dBμV/m) = Reading Level (dBμV) + Factor (dB/m)

Factor (dB/m) = Cable Loss (dB) + Antenna Factor (dB/m) - Pre_Amplifier Gain (dB)

The Worst Case of Radiated Emission below 1GHz:

Site: WZ-AC1	Time: 2021/06/11 - 19:07
Limit: FCC_Part15.209_RSE(3m)	Engineer: Jason Gao
Probe: WZ-AC1_VULB 9168 _30-1000MHz	Polarity: Horizontal
EUT: Remote Wireless	Power: DC 11.5V
Test Mode: Mode 1	

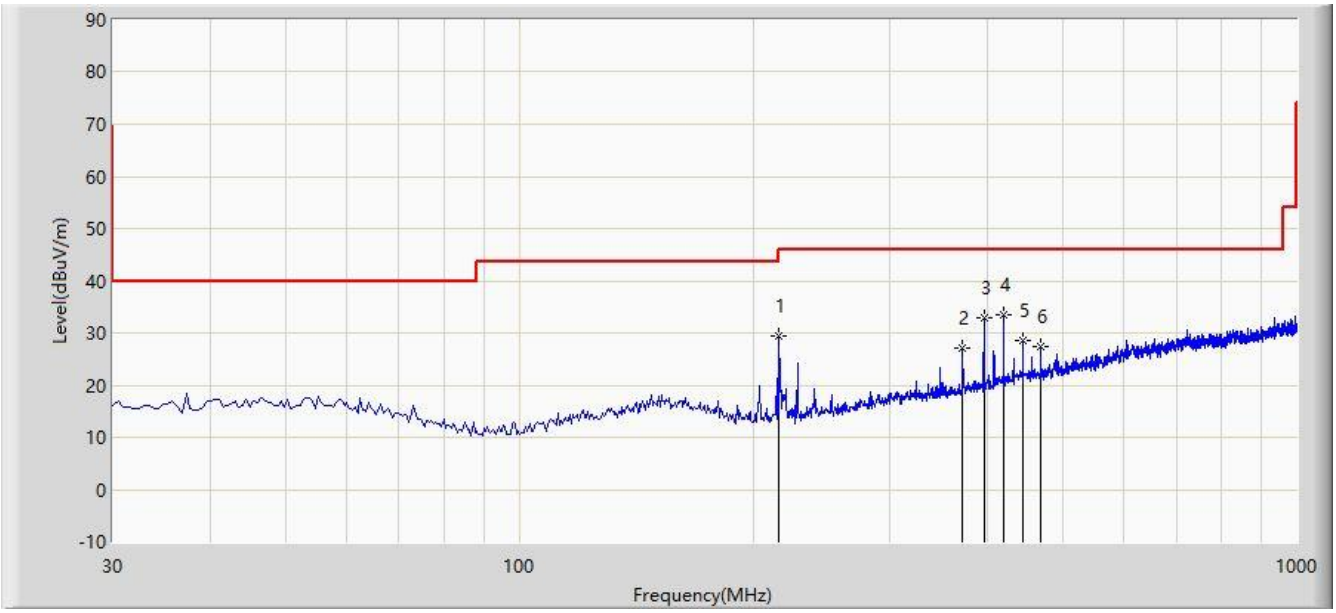

No	Flag	Mark	Frequency (MHz)	Measure Level (dBuV/m)	Reading Level (dBuV)	Margin (dB)	Limit (dBuV/m)	Factor (dB/m)	Type
1			215.755	29.390	14.925	-14.110	43.500	14.465	PK
2			371.925	27.108	7.010	-18.892	46.000	20.098	PK
3			396.175	32.980	12.336	-13.020	46.000	20.644	PK
4		*	419.940	33.524	12.343	-12.476	46.000	21.181	PK
5			444.190	28.586	6.399	-17.414	46.000	22.187	PK
6			467.955	27.494	4.890	-18.506	46.000	22.604	PK

Note 1: Measure Level (dBμV/m) = Reading Level (dBμV) + Factor (dB/m)

Factor (dB/m) = Cable Loss (dB) + Antenna Factor (dB/m)

Note 2: The amplitude of radiated emissions (frequency range from 9kHz ~ 30MHz, 18GHz to 25GHz) is that proximity to ambient noise, which also are attenuated more than 20 dB below the permissible value. Therefore, the data is not presented in the report.

Site: WZ-AC1	Time: 2021/06/11 - 19:08
Limit: FCC_Part15.209_RSE(3m)	Engineer: Jason Gao
Probe: WZ-AC1_VULB 9168 _30-1000MHz	Polarity: Vertical
EUT: Remote Wireless	Power: DC 11.5V
Test Mode: Mode 1	

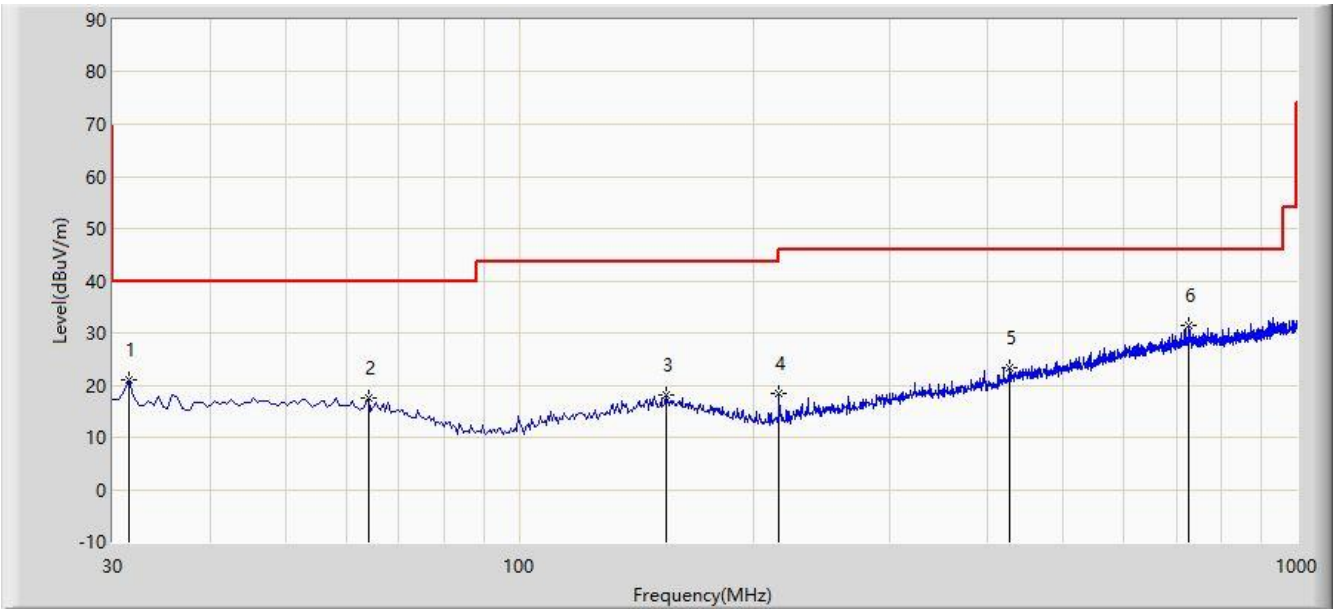

No.	Flag	Mark	Frequency (MHz)	Measure Level (dBuV/m)	Reading Level (dBuV)	Margin (dB)	Limit (dBuV/m)	Factor (dB/m)	Type
1			31.455	20.911	4.238	-19.089	40.000	16.673	PK
2			63.950	17.578	0.639	-22.422	40.000	16.939	PK
3			154.645	18.124	0.066	-25.376	43.500	18.058	PK
4			215.755	18.531	4.066	-24.969	43.500	14.465	PK
5			427.700	23.364	1.837	-22.636	46.000	21.527	PK
6		*	726.945	31.458	3.852	-14.542	46.000	27.605	PK

Note 1: Measure Level (dBμV/m) = Reading Level (dBμV) + Factor (dB/m)

Factor (dB/m) = Cable Loss (dB) + Antenna Factor (dB/m)

Note 2: The amplitude of radiated emissions (frequency range from 9kHz ~ 30MHz, 18GHz to 25GHz) is that proximity to ambient noise, which also are attenuated more than 20 dB below the permissible value. Therefore, the data is not presented in the report.

5.7. Radiated Restricted Band Edge Measurement

5.7.1.Test Limit

For 15.205 requirement:

Radiated emissions which fall in the restricted bands, as defined in Section 15.205(a) of FCC part 15, must also comply with the radiated emission limits specified in Section 15.209(a).

Frequency (MHz)	Frequency (MHz)	Frequency (MHz)	Frequency (GHz)
0.090 - 0.110	16.42 - 16.423	399.9 - 410	4.5 - 5.15
[1] 0.495 - 0.505	16.69475 - 16.69525	608 - 614	5.35 - 5.46
2.1735 - 2.1905	16.80425 - 16.80475	960 - 1240	7.25 - 7.75
4.125 - 4.128	25.5 - 25.67	1300 - 1427	8.025 - 8.5
4.17725 - 4.17775	37.5 - 38.25	1435 - 1626.5	9.0 - 9.2
4.20725 - 4.20775	73 - 74.6	1645.5 - 1646.5	9.3 - 9.5
6.215 - 6.218	74.8 - 75.2	1660 - 1710	10.6 - 12.7
6.26775 - 6.26825	108 - 121.94	1718.8 - 1722.2	13.25 - 13.4
6.31175 - 6.31225	123 - 138	2200 - 2300	14.47 - 14.5
8.291 - 8.294	149.9 - 150.05	2310 - 2390	15.35 - 16.2
8.362 - 8.366	156.52475 - 156.52525	2483.5 - 2500	17.7 - 21.4
8.37625 - 8.38675	156.7 - 156.9	2690 - 2900	22.01 - 23.12
8.41425 - 8.41475	162.0125 - 167.17	3260 - 3267	23.6 - 24.0
12.29 - 12.293	167.72 - 173.2	3332 - 3339	31.2 - 31.8
12.51975 - 12.52025	240 - 285	3345.8 - 3358	36.43 - 36.5
12.57675 - 12.57725	322 - 335.4	3600 - 4400	([2])
13.36 - 13.41	--	--	--

All out of band emissions appearing in a restricted band as specified in Section 15.205 of the Title 47CFR must not exceed the limits shown in Table per Section 15.209.

FCC Part 15 Subpart C Paragraph 15.209 Limits		
Frequency [MHz]	Field Strength [uV/m]	Measured Distance [Meters]
0.009 - 0.490	2400/F (kHz)	300
0.490 - 1.705	24000/F (kHz)	30
1.705 - 30	30	30
30 - 88	100	3
88 - 216	150	3
216 - 960	200	3
Above 960	500	3

5.7.2.Test Procedure Used

ANSI C63.10 Section 6.3 (General Requirements)

ANSI C63.10 Section 6.6 (Standard test method above 1GHz)

5.7.3.Test Setting

Peak Field Strength Measurements

1. Analyzer center frequency was set to the frequency of the radiated spurious emission of interest
2. RBW = 1MHz
3. VBW = 3MHz
4. Detector = peak
5. Sweep time = auto couple
6. Trace mode = max hold
7. Trace was allowed to stabilize

Average Measurements above 1GHz (Method VB)

1. Analyzer center frequency was set to the frequency of the radiated spurious emission of interest
2. RBW = 1MHz
3. VBW, If the EUT is configured to transmit with duty cycle ≥ 98%, set VBW = 10 Hz.

   If the EUT duty cycle is < 98%, set VBW ≥ 1/T. T is the minimum transmission duration.
4. Detector = Peak
5. Sweep time = auto
6. Trace mode = max hold
7. Trace was allowed to stabilize

5.7.4.Test Setup

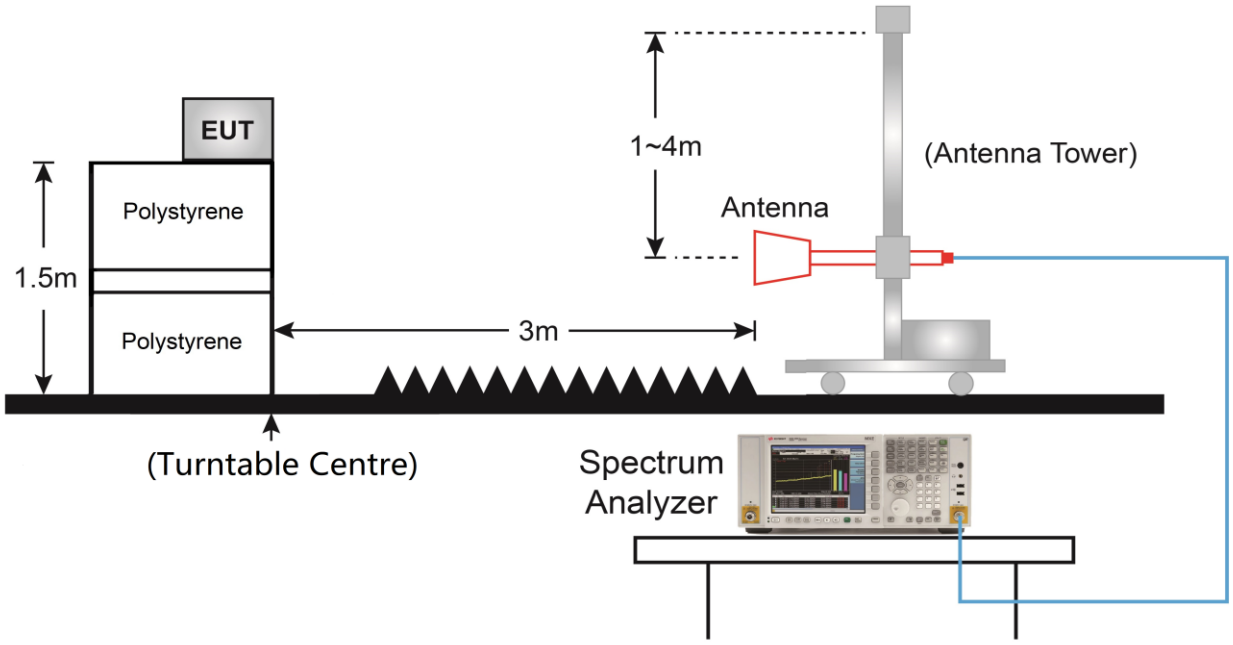

5.7.5.Test Result

Site: WZ-AC1	Time: 2021/06/10
Limit: FCC_Part15.209_RE(3m)	Engineer: Tommy Tang
Probe: WZ-AC1_BBHA9120D_1-18GHz	Polarity: Horizontal
EUT: Remote Wireless	Power: DC 11.5V
Test Mode: Mode 1	

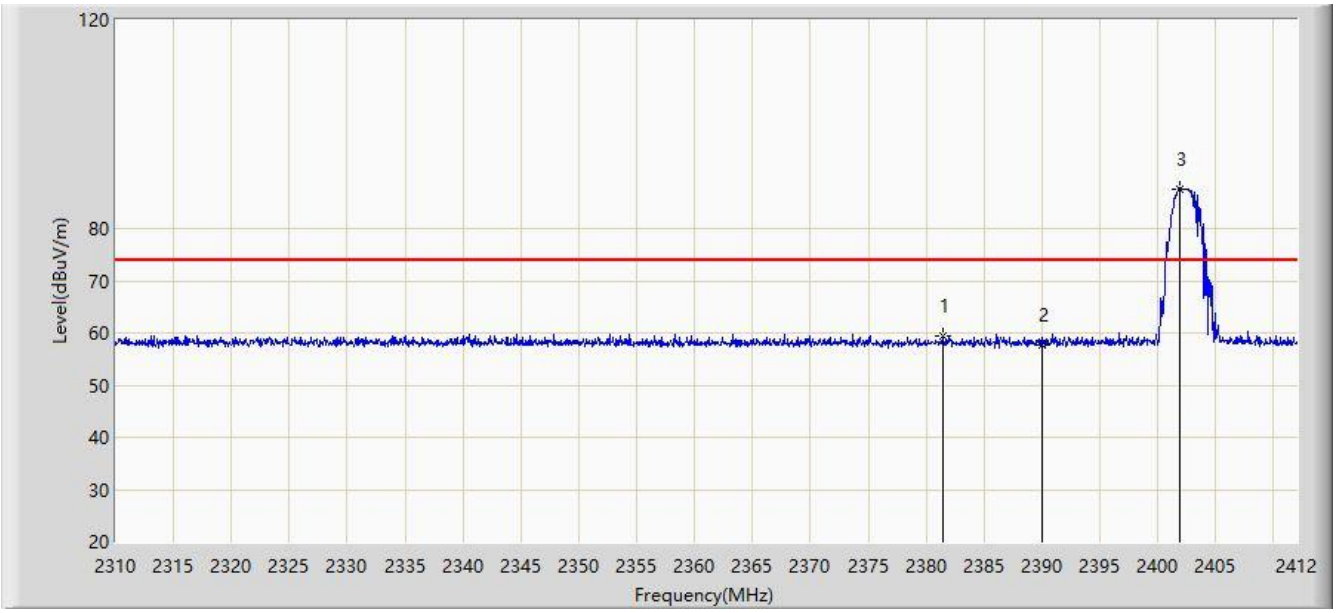

No.	Flag	Mark	Frequency (MHz)	Measure Level (dBuV/m)	Reading Level (dBuV)	Margin (dB)	Limit (dBuV/m)	Factor (dB/m)	Type
1			2381.502	59.312	28.271	-14.688	74.000	31.041	PK
2			2390.000	57.727	26.694	-16.273	74.000	31.034	PK
3		*	2401.902	87.642	56.634	N/A	N/A	31.009	PK

Note: Measure Level (dBµV/m) = Reading Level (dBµV) + Factor (dB/m)

Factor (dB/m) = Cable Loss (dB) + Antenna Factor (dB/m)

Site: WZ-AC1	Time: 2021/06/10
Limit: FCC_Part15.209_RE(3m)	Engineer: Tommy Tang
Probe: WZ-AC1_BBHA9120D_1-18GHz	Polarity: Horizontal
EUT: Remote Wireless	Power: DC 11.5V
Test Mode: Mode 1	

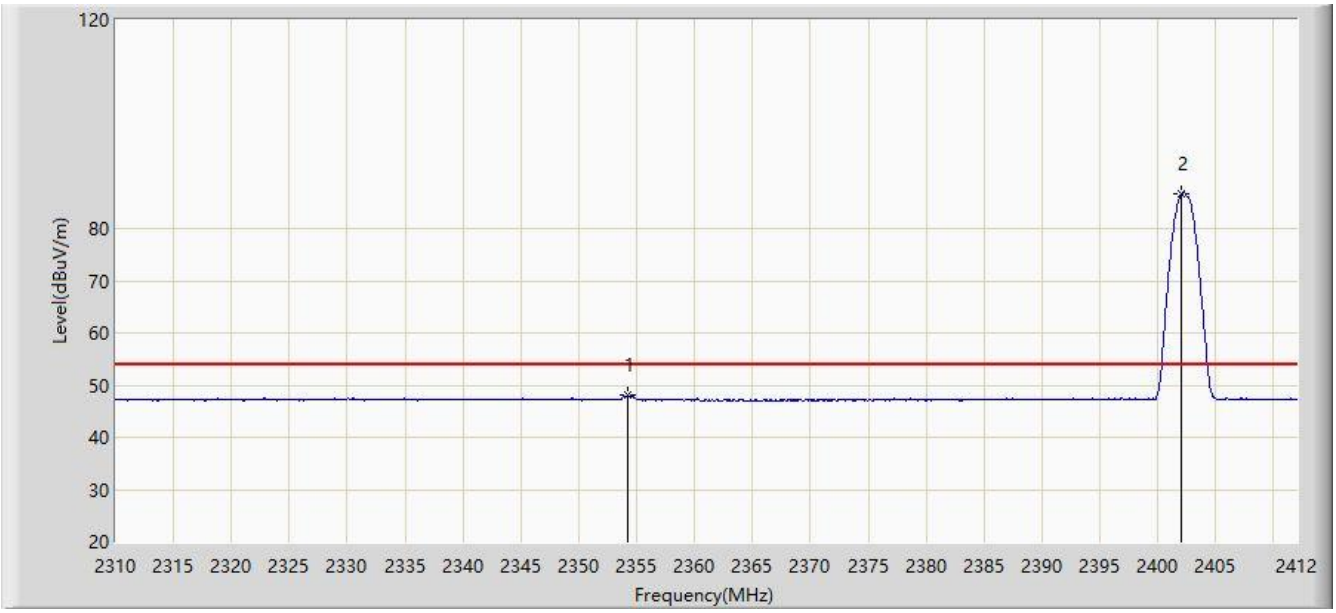

No.	Flag	Mark	Frequency (MHz)	Measure Level (dBuV/m)	Reading Level (dBuV)	Margin (dB)	Limit (dBuV/m)	Factor (dB/m)	Type
1			2354.217	48.029	16.890	-5.971	54.000	31.140	AV
2		*	2402.055	86.655	55.647	N/A	N/A	31.008	AV

Note: Measure Level (dBµV/m) = Reading Level (dBµV) + Factor (dB/m)

Factor (dB/m) = Cable Loss (dB) + Antenna Factor (dB/m)

Site: WZ-AC1	Time: 2021/06/10
Limit: FCC_Part15.209_RE(3m)	Engineer: Tommy Tang
Probe: WZ-AC1_BBHA9120D_1-18GHz	Polarity: Vertical
EUT: Remote Wireless	Power: DC 11.5V
Test Mode: Mode 1	

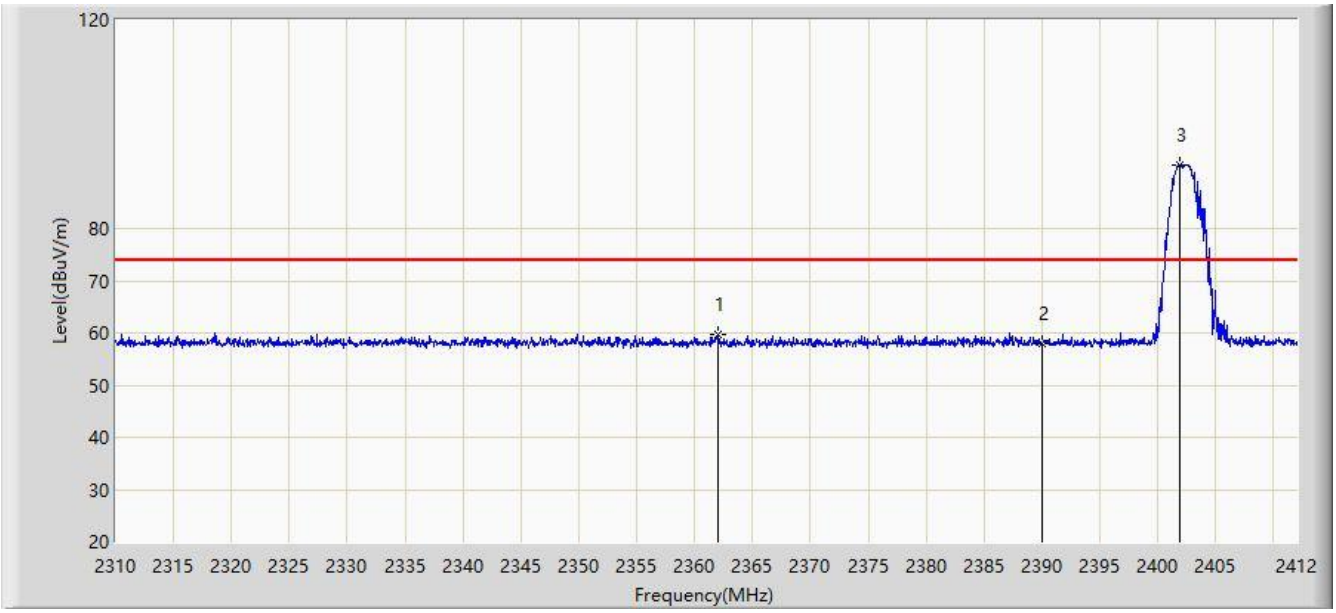

No.	Flag	Mark	Frequency (MHz)	Measure Level (dBuV/m)	Reading Level (dBuV)	Margin (dB)	Limit (dBuV/m)	Factor (dB/m)	Type
1			2362.071	59.728	28.645	-14.272	74.000	31.082	PK
2			2390.000	57.982	26.949	-16.018	74.000	31.034	PK
3		*	2401.902	92.206	61.198	N/A	N/A	31.009	PK

Note: Measure Level (dBµV/m) = Reading Level (dBµV) + Factor (dB/m)

Factor (dB/m) = Cable Loss (dB) + Antenna Factor (dB/m)

Site: WZ-AC1	Time: 2021/06/10 - 14:52
Limit: FCC_Part15.209_RE(3m)	Engineer: Tommy Tang
Probe: WZ-AC1_BBHA9120D_1-18GHz	Polarity: Vertical
EUT: Remote Wireless	Power: DC 11.5V
Test Mode: Mode 1	

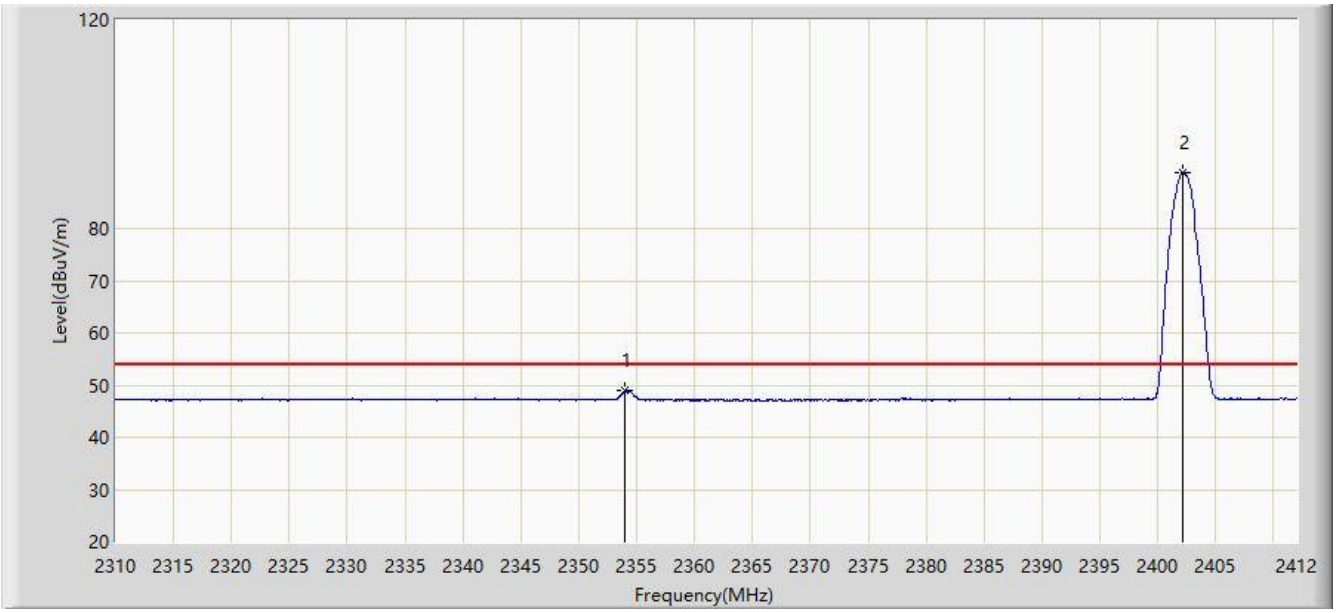

No.	Flag	Mark	Frequency (MHz)	Measure Level (dBuV/m)	Reading Level (dBuV)	Margin (dB)	Limit (dBuV/m)	Factor (dB/m)	Type
1			2354.013	48.872	17.731	-5.128	54.000	31.140	AV
2		*	2402.106	90.741	59.733	N/A	N/A	31.008	AV

Note: Measure Level (dBµV/m) = Reading Level (dBµV) + Factor (dB/m)

Factor (dB/m) = Cable Loss (dB) + Antenna Factor (dB/m)

Site: WZ-AC1	Time: 2021/06/10
Limit: FCC_Part15.209_RE(3m)	Engineer: Tommy Tang
Probe: WZ-AC1_BBHA9120D_1-18GHz	Polarity: Horizontal
EUT: Remote Wireless	Power: DC 11.5V
Test Mode: Mode 3	

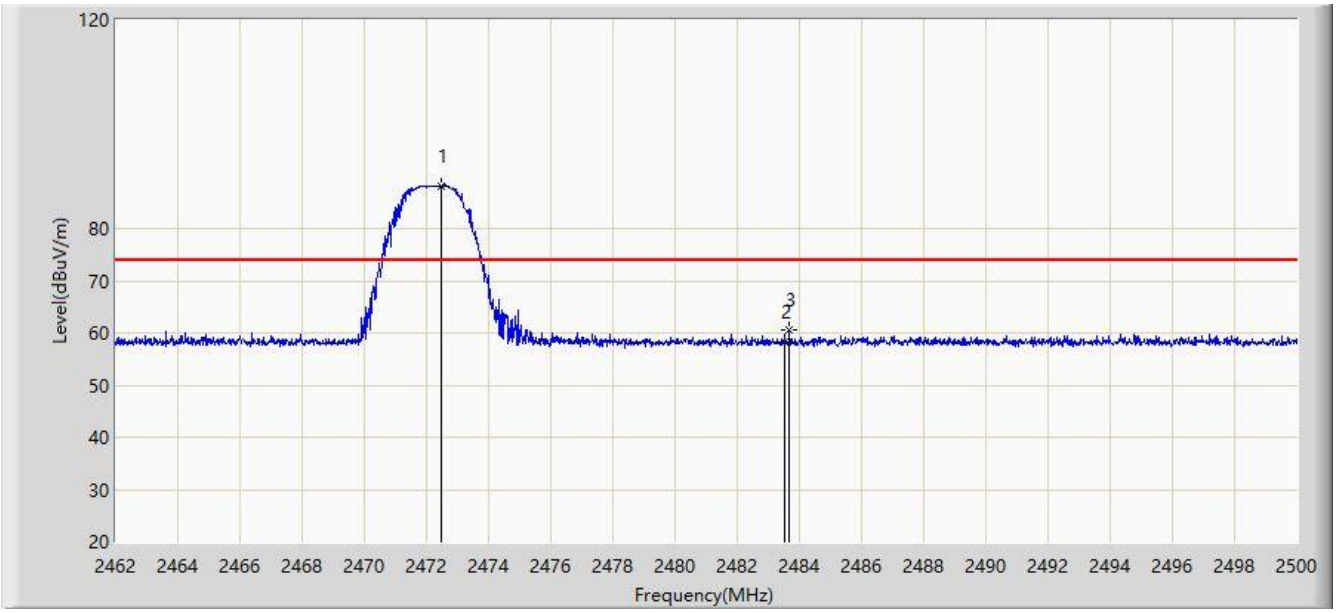

No.	Flag	Mark	Frequency (MHz)	Measure Level (dBuV/m)	Reading Level (dBuV)	Margin (dB)	Limit (dBuV/m)	Factor (dB/m)	Type
1		*	2472.488	88.179	57.311	N/A	N/A	30.868	PK
2			2483.500	58.393	27.505	-15.607	74.000	30.888	PK
3			2483.679	60.593	29.704	-13.407	74.000	30.888	PK

Note: Measure Level (dBµV/m) = Reading Level (dBµV) + Factor (dB/m)

Factor (dB/m) = Cable Loss (dB) + Antenna Factor (dB/m)

Site: WZ-AC1	Time: 2021/06/10
Limit: FCC_Part15.209_RSE(3m)	Engineer: Tommy Tang
Probe: WZ-AC1_BBHA9120D_1-18GHz	Polarity: Horizontal
EUT: Remote Wireless	Power: DC 11.5V
Test Mode: Mode 3	

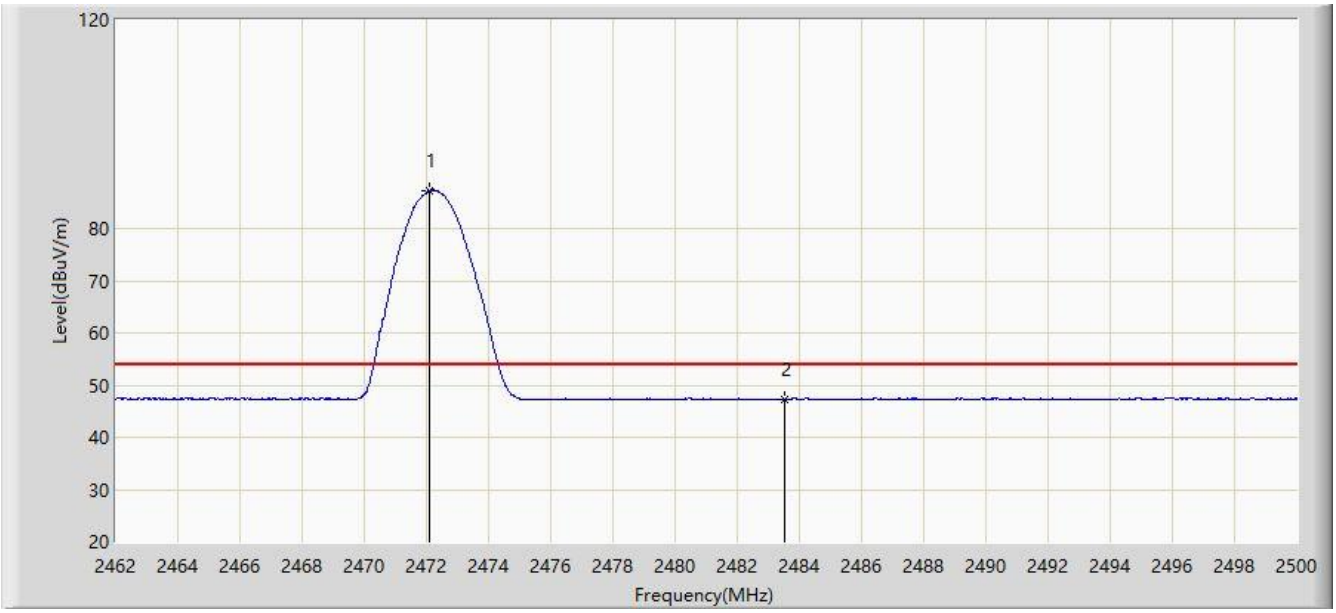

No.	Flag	Mark	Frequency (MHz)	Measure Level (dBuV/m)	Reading Level (dBuV)	Margin (dB)	Limit (dBuV/m)	Factor (dB/m)	Type
1		*	2472.108	87.241	56.373	N/A	N/A	30.868	AV
2			2483.500	47.251	16.363	-6.749	54.000	30.888	AV

Note: Measure Level (dBµV/m) = Reading Level (dBµV) + Factor (dB/m)

Factor (dB/m) = Cable Loss (dB) + Antenna Factor (dB/m)

Site: WZ-AC1	Time: 2021/06/10
Limit: FCC_Part15.209_RE(3m)	Engineer: Tommy Tang
Probe: WZ-AC1_BBHA9120D_1-18GHz	Polarity: Vertical
EUT: Remote Wireless	Power: DC 11.5V
Test Mode: Mode 3	

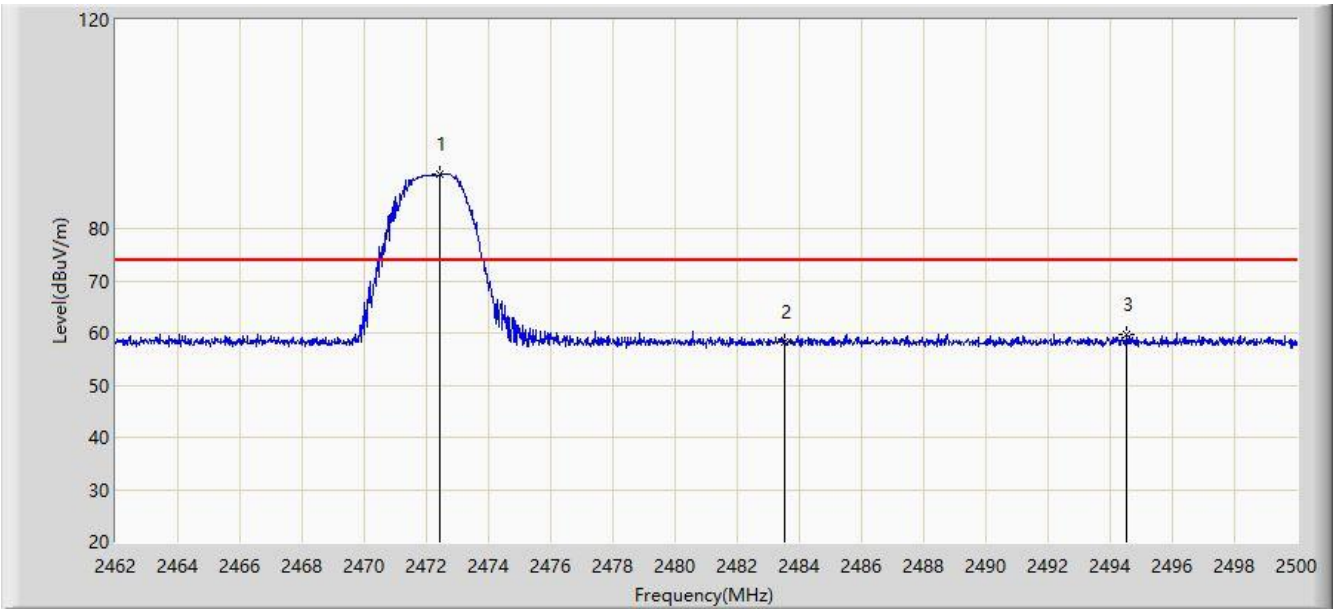

No.	Flag	Mark	Frequency (MHz)	Measure Level (dBuV/m)	Reading Level (dBuV)	Margin (dB)	Limit (dBuV/m)	Factor (dB/m)	Type
1		*	2472.431	90.554	59.686	N/A	N/A	30.868	PK
2			2483.500	58.291	27.403	-15.709	74.000	30.888	PK
3			2494.528	59.692	28.773	-14.308	74.000	30.919	PK

Note: Measure Level (dBµV/m) = Reading Level (dBµV) + Factor (dB/m)

Factor (dB/m) = Cable Loss (dB) + Antenna Factor (dB/m)

Site: WZ-AC1	Time: 2021/06/10
Limit: FCC_Part15.209_RE(3m)	Engineer: Tommy Tang
Probe: WZ-AC1_BBHA9120D_1-18GHz	Polarity: Vertical
EUT: Remote Wireless	Power: DC 11.5V
Test Mode: Mode 3	

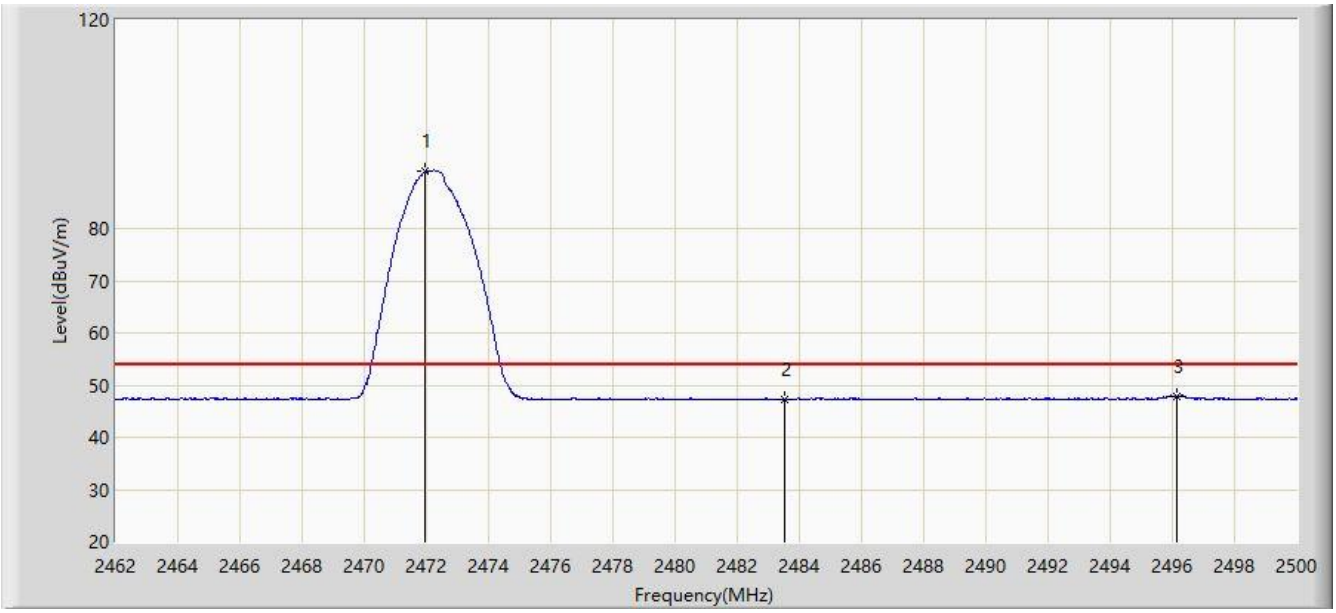

No	Flag	Mark	Frequency (MHz)	Measure Level (dBuV/m)	Reading Level (dBuV)	Margin (dB)	Limit (dBuV/m)	Factor (dB/m)	Type
1		*	2471.975	90.996	60.128	N/A	N/A	30.868	AV
2			2483.500	47.333	16.445	-6.667	54.000	30.888	AV
3			2496.143	47.804	16.882	-6.196	54.000	30.922	AV

Note: Measure Level (dBµV/m) = Reading Level (dBµV) + Factor (dB/m)

Factor (dB/m) = Cable Loss (dB) + Antenna Factor (dB/m)

5.8. AC Conducted Emissions Measurement

5.8.1.Test Limit

FCC Part 15 Subpart C Paragraph 15.207 Limits		
Frequency (MHz)	QP (dBμV)	AV (dBμV)
0.15 - 0.50	66 - 56	56 - 46
0.50 - 5.0	56	46
5.0 - 30	60	50

Note 1: The lower limit shall apply at the transition frequencies.

Note 2: The limit decreases linearly with the logarithm of the frequency in the range 0.15MHz to 0.5MHz.

5.8.2.Test Setup

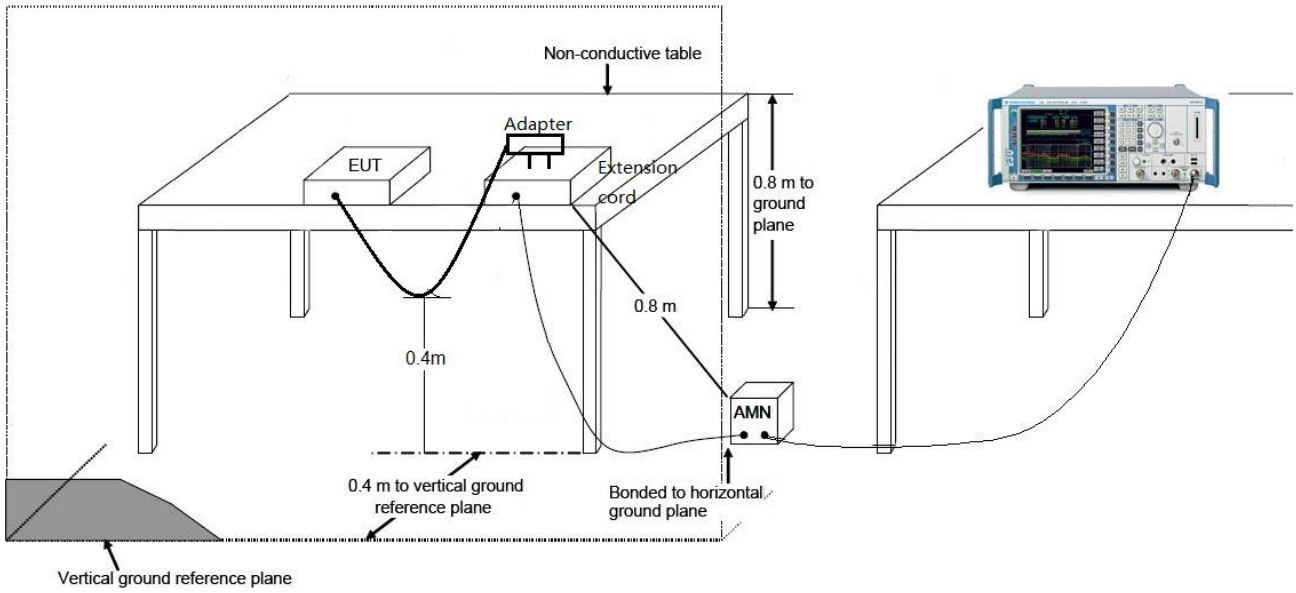

5.8.3.Test Result

The EUT is powered by DC source, so this requirement does not apply.

6. CONCLUSION

The data collected relate only the item(s) tested and show that the device is compliance with Part 15C of the FCC rules.

The End

Appendix A - Test Setup Photograph

Refer to “2108RSU043-UT” file.

Appendix B - EUT Photograph

Refer to “ 2108RSU043-UE” file.