FCC Test Report

FCC ID: 2AEZV-ICI156T

Product： DIGITAL ADVERTISEMENT SCREEN

Trade Name： ICI

Model Number： ICI156T

Serial Model： N/A

Report No.： NTEK-2016N0303816F4

Prepared for

ICI TECHNOLOGY SHENZHEN CO., LTD.
2A826,Xinludao Building, Nanshan Street and Guimiao Road,
Nanshan District, Shenzhen, China.

Prepared by

Shenzhen NTEK Testing Technology Co., Ltd.

1/F, Building E, Fenda Science Park, Sanwei Community, Xixiang Street,
Bao'an District, Shenzhen P.R. China

Tel.: +86-0755-61156588 Fax.: +86-0755-61156599
Website: www.ntek.org.cn

TEST RESULT CERTIFICATION

Applicant's name ..... : ICI Technology Shenzhen Co., Ltd.

Address ..... : 2A826,Xinludao Building, Nanshan Street and Guimiao Road, Nanshan District, Shenzhen, China.

Manufacturer's Name ..... : ICI Technology Shenzhen Co., Ltd.

Address ..... : 2A826,Xinludao Building, Nanshan Street and Guimiao Road, Nanshan District, Shenzhen, China.

Product description

Product name ..... : DIGITAL ADVERTISEMENT SCREEN

Model and/or type reference : ICI156T

Standards ..... : FCC Part15B:01 Oct.2015
ANSI C63.4:2014

This device described above has been tested by NTEK, and the test results show that the equipment under test (EUT) is in compliance with Part 15 of FCC Rules. And it is applicable only to the tested sample identified in the report.

This report shall not be reproduced except in full, without the written approval of NTEK, this document may be altered or revised by NTEK, personnel only, and shall be noted in the revision of the document.

Date of Test .....:

Date (s) of performance of tests .....: 03 Mar. 2016 ~25 Mar. 2016

Date of Issue.....: 25 Mar. 2016

Test Result.....: **Pass**

Testing Engineer : Eileen Liu.

(Eileen Liu)

Technical Manager : Jason chen

(Jason Chen)

Authorized Signatory : Sam. chen

(Sam Chen)

Table of Contents **Page**

1 . TEST SUMMARY 4

1.1 TEST FACILITY 5

1.2 MEASUREMENT UNCERTAINTY 5

2 . GENERAL INFORMATION 6

2.1 GENERAL DESCRIPTION OF EUT 6

2.2 DESCRIPTION OF TEST SETUP 8

2.3 DESCRIPTION TEST PERIPHERAL AND EUT PERIPHERAL 9

2.4 MEASUREMENT INSTRUMENTS LIST 10

3 . EMC EMISSION TEST 11

3.1 CONDUCTED EMISSION MEASUREMENT 11

3.1.1 POWER LINE CONDUCTED EMISSION 11

3.1.2 TEST PROCEDURE 12

3.1.3 TEST SETUP 12

3.1.4 EUT OPERATING CONDITIONS 12

3.1.5 TEST RESULTS 13

3.2 RADIATED EMISSION MEASUREMENT 15

3.2.1 LIMITS OF RADIATED EMISSION MEASUREMENT 15

3.2.2 TEST PROCEDURE 15

3.2.3 TEST SETUP 16

3.2.4 TEST RESULTS 17

3.2.5 TEST RESULTS(1000~12400MHz) 19

4 . EUT TEST PHOTO 20

1. TEST SUMMARY

Test procedures according to the technical standards:

EMC Emission				
Standard	Test Item	Limit	Judgment	Remark
FCC Part15B:2014 ANSI C63.4: 2014	Conducted Emission	Class B	PASS	
	Radiated Emission	Class B	PASS	

NOTE:

(1) 'N/A' denotes test is not applicable in this Test Report

(2) For client's request and manual description, the test will not be executed.

1.1 TEST FACILITY

NTEK Testing Technology Co., Ltd
Add. : 1/F, Building E, Fenda Science Park, Sanwei Community, Xixiang Street, Bao'an District, Shenzhen P.R. China.
FCC Registration Number:238937; IC Registration Number:9270A-1
CNAS Registration Number:L5516

1.2 MEASUREMENT UNCERTAINTY

The reported uncertainty of measurement **y ± U**，where expended uncertainty **U** is based on a standard uncertainty multiplied by a coverage factor of **k=2**，providing a level of confidence of approximately **95** %.

A. Conducted Measurement :

Test Site	Method	Measurement Frequency Range	U，(dB)	NOTE
NTEKC01	ANSI	150 KHz ~ 30MHz	3.2	

B. Radiated Measurement :

Test Site	Method	Measurement Frequency Range	U，(dB)	NOTE
NTEKA01	ANSI	30MHz ~ 1000MHz	4.7	
		1GHz ~12.5GHz	5.0	

2. GENERAL INFORMATION

2.1 GENERAL DESCRIPTION OF EUT

<table>
<tr><td>Equipment</td><td>DIGITAL ADVERTISEMENT SCREEN</td></tr>
<tr><td>Trade Name</td><td>ICI</td></tr>
<tr><td>Model Name</td><td>ICI156T</td></tr>
<tr><td>Serial Model</td><td>N/A</td></tr>
<tr><td>Model Difference</td><td>N/A</td></tr>
<tr><td>Product Description</td><td>The EUT is a DIGITAL ADVERTISEMENT SCREEN.
<table>
<tr><td>Connecting I/O port:</td><td>USB, DC in</td></tr>
<tr><td>Operation Frequency:</td><td>BT:2402~2480 MHz
WIFI:802.11b/g/n(20MHz): 2412~2462MHz
802.11n(40MHz):2422~2452MHz</td></tr>
<tr><td>Modulation Type:</td><td>BT(1Mbps): GFSK
BT EDR(2Mbps): π/4-DQPSK
BT EDR(3Mbps): 8-DPSK
IEEE 802.11b :
DSSS (CCK, QPSK, DBPSK)
IEEE 802.11g/n (HT20/HT40) : OFDM
(64QAM, 16QAM, QPSK, BPSK)</td></tr>
</table></td></tr>
<tr><td>Power Source</td><td>DC Voltage</td></tr>
<tr><td>Adapter</td><td>N/A</td></tr>
<tr><td>Battery</td><td>N/A</td></tr>
</table>

2.1.1 DESCRIPTION OF TEST MODES

To investigate the maximum EMI emission characteristics generates from EUT, the test system was pre-scanning tested base on the consideration of following EUT operation mode or test configuration mode which possible have effect on EMI emission level. Each of these EUT operation mode(s) or test configuration mode(s) mentioned above was evaluated respectively.

Pretest Mode	Description
Mode 1	HDMI RUNNING MODE
Mode 2	USB PLAYING MODE
Mode 3	TF PLAYING MODE
Mode 4	WIFI MODE
Mode 5	BT3.0/BT4.0 MODE

For Conducted Test	
Final Test Mode	Description
Mode 1	HDMI RUNNING MODE

For Radiated Test	
Final Test Mode	Description
Mode 1	HDMI RUNNING MODE

Note: Final Test Mode: Through Pre-scan, find the mode 1 is the worse case.
Only the worst case mode is recorded in the report.

2.2 DESCRIPTION OF TEST SETUP

RE

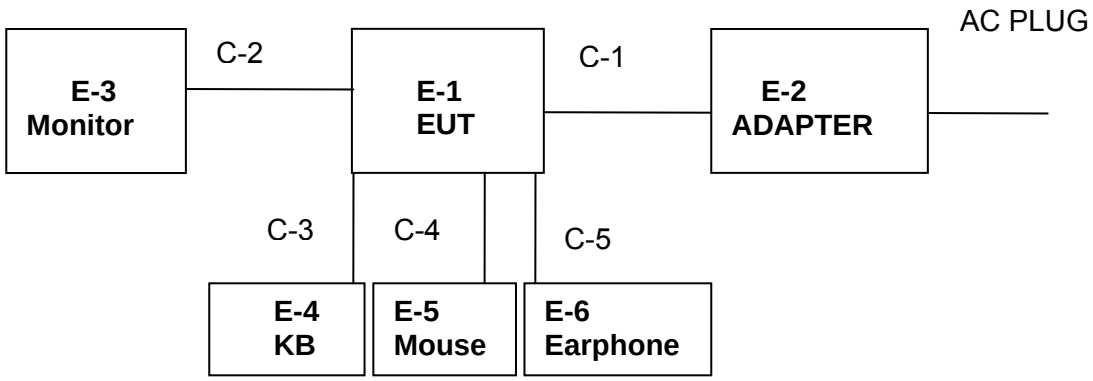

CE

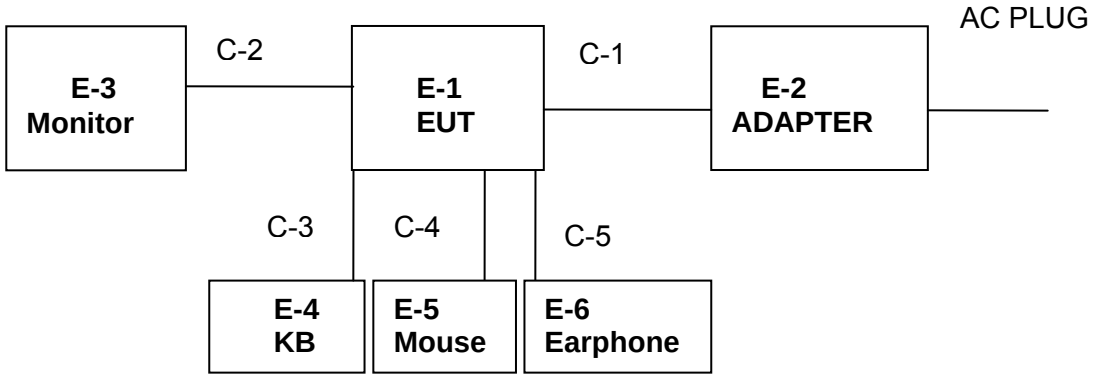

2.3 DESCRIPTION TEST PERIPHERAL AND EUT PERIPHERAL

The EUT has been tested as an independent unit together with other necessary accessories or support units. The following support units or accessories were used to form a representative test configuration during the tests.

Item	Equipment	Brand	Model/Type No.	Series No.	Note
E-1	DIGITAL ADVERTISEMENT SCREEN	N/A	ICI156T	N/A	EUT
E-2	Printer	Canon	L11121E	LBP2900	
E-3	Monitor	DELL	IN2020MB	cn-0y6mhx-74261-11f-67es	
E-4	Keyboard	DELL	SK-8185	OY526KUS	
E-5	Mouse	DELL	MS111-P	cn-011d3v-71581-11e-1th7	
E-6	Earphone	N/A	2688	N/A	

Item	Shielded Type	Ferrite Core	Length	Note
C-1	Unshielded	NO	1.2m	Power Line
C-2	Unshielded	NO	1.0m	HDMI Line
C-3	Unshielded	NO	1.0m	PS2 Line
C-4	Unshielded	NO	1.0m	PS2 Line
C-5	Unshielded	NO	0.8m	Earphone

Note:

(1) The support equipment was authorized by Declaration of Confirmation.
(2) For detachable type I/O cable should be specified the length in cm in 『Length』 column.
(3) “YES” means “shielded” “with core”; “NO” means “unshielded” “without core”.

2.4 MEASUREMENT INSTRUMENTS LIST

Radiation Test equipment

Item	Kind of Equipment	Manufacturer	Type No.	Serial No.	Last calibration	Calibrated until	Calibration period
1	Spectrum Analyzer	Agilent	E4407B	MY45108040	2015.07.06	2016.07.05	1 year
2	Test Receiver	R&S	ESPI	101318	2015.06.07	2016.06.06	1 year
3	Bilog Antenna	TESEQ	CBL6111D	31216	2015.07.06	2016.07.05	1 year
4	50Ω Coaxial Switch	Anritsu	MP59B	6200264416	2015.06.07	2016.06.06	1 year
5	Spectrum Analyzer	ADVANTEST	R3132	150900201	2015.06.07	2016.06.06	1 year
6	Horn Antenna	EM	EM-AH-10180	2011071402	2015.07.06	2016.07.05	1 year
7	Horn Ant	Schwarzbeck	BBHA 9170	9170-181	2015.07.06	2016.07.05	1 year
8	Amplifier	EM	EM-30180	060538	2015.12.22	2016.12.21	1 year
9	Loop Antenna	ARA	PLA-1030/B	1029	2015.06.08	2016.06.07	1 year
10	Power Meter	R&S	NRVS	100696	2015.07.06	2016.07.05	1 year
11	Power Sensor	R&S	URV5-Z4	0395.1619.05	2015.07.06	2016.07.05	1 year
12	Test Cable	N/A	R-01	N/A	2015.07.06	2016.07.05	1 year
13	Test Cable	N/A	R-02	N/A	2015.07.06	2016.07.05	1 year

Conduction Test equipment

Item	Kind of Equipment	Manufacturer	Type No.	Serial No.	Last calibration	Calibrated until	Calibration period
1	Test Receiver	R&S	ESCI	101160	2015.06.06	2016.06.05	1 year
2	LISN	R&S	ENV216	101313	2015.08.24	2016.08.23	1 year
3	LISN	EMCO	3816/2	00042990	2015.08.24	2016.08.23	1 year
4	50Ω Coaxial Switch	Anritsu	MP59B	6200264417	2015.06.07	2016.06.06	1 year
5	Passive Voltage Probe	R&S	ESH2-Z3	100196	2015.06.07	2016.06.06	1 year
6	Absorbing clamp	R&S	MOS-21	100423	2015.06.08	2016.06.07	1 year
7	Test Cable	N/A	C01	N/A	2015.06.08	2016.06.07	1 year
8	Test Cable	N/A	C02	N/A	2015.06.08	2016.06.07	1 year
9	Test Cable	N/A	C03	N/A	2015.06.08	2016.06.07	1 year

3. EMC EMISSION TEST

3.1 CONDUCTED EMISSION MEASUREMENT

3.1.1 POWER LINE CONDUCTED EMISSION (Frequency Range 150KHz-30MHz)

FREQUENCY (MHz)	Class A (dBuV)		Class B (dBuV)	
	Quasi-peak	Average	Quasi-peak	Average
0.15 -0.5	79.00	66.00	66 - 56 *	56 - 46 *
0.50 -5.0	73.00	60.00	56.00	46.00
5.0 -30.0	73.00	60.00	60.00	50.00

Note:

(1) The tighter limit applies at the band edges.

(2) The limit of " * " marked band means the limitation decreases linearly with the logarithm of the frequency in the range.

The following table is the setting of the receiver

Receiver Parameters	Setting
Attenuation	10 dB
Start Frequency	0.15 MHz
Stop Frequency	30 MHz
IF Bandwidth	9 kHz

3.1.2 TEST PROCEDURE

a. The EUT was placed 0.8 meters from the horizontal ground plane with EUT being connected to the power mains through a line impedance stabilization network (LISN). All other support equipments powered from additional LISN(s). The LISN provide 50 Ohm/ 50uH of coupling impedance for the measuring instrument.
b. Interconnecting cables that hang closer than 40 cm to the ground plane shall be folded back and forth in the center forming a bundle 30 to 40 cm long.
c. I/O cables that are not connected to a peripheral shall be bundled in the center. The end of the cable may be terminated, if required, using the correct terminating impedance. The overall length shall not exceed 1 m.
d. LISN at least 80 cm from nearest part of EUT chassis.
e. For the actual test configuration, please refer to the related Item –EUT Test Photos.

3.1.3 TEST SETUP

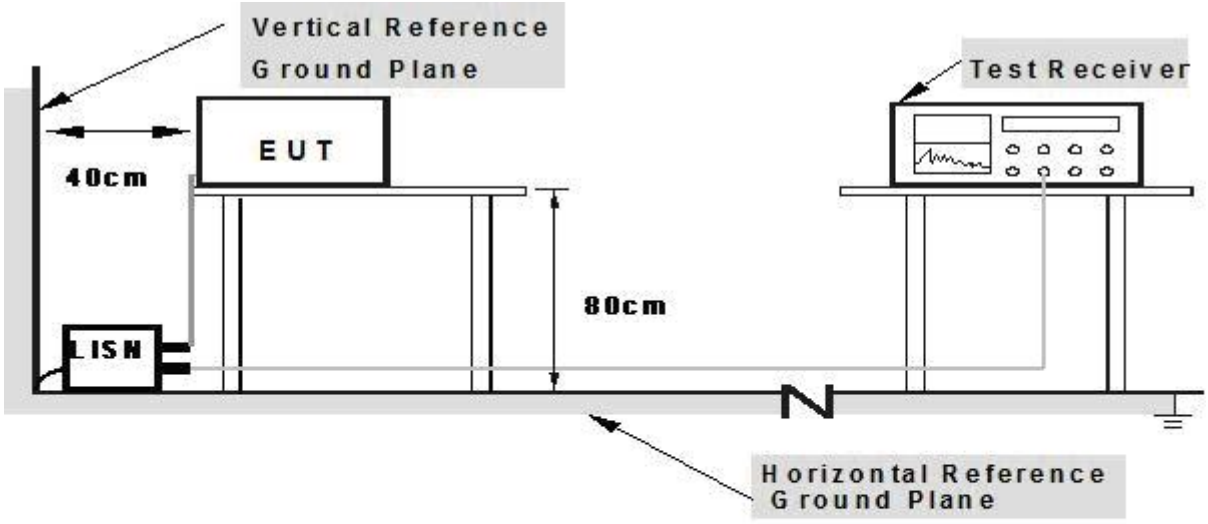

Note: 1.Support units were connected to second LISN.
2.Both of LISNs (AMN) are 80 cm from EUT and at least 80 from other units and other metal planes

3.1.4 EUT OPERATING CONDITIONS

The EUT tested system was configured as the statements of **2.3** Unless otherwise a special operating condition is specified in the follows during the testing.

3.1.5 TEST RESULTS

EUT：	DIGITAL ADVERTISEMENT SCREEN	Model Name. ：	ICI156T
Temperature：	26 ℃	Relative Humidity：	54%
Pressure：	1010hPa	Test Date：	2016-3-18
Test Mode：	Mode 1	Phase：	L
Test Voltage ：	AC 120V/60Hz		

Frequency (MHz)	Reading Level (dBμV)	Correct Factor (dB)	Measure-ment (dBμV)	Limits (dBμV)	Margin (dB)	Remark
0.1539	49.42	10.08	59.50	65.78	-6.28	QP
0.1539	25.76	10.08	35.84	55.78	-19.94	AVG
0.2058	50.20	10.03	60.23	63.37	-3.14	QP
0.2058	24.92	10.03	34.95	53.37	-18.42	AVG
0.2540	45.32	10.08	55.40	61.62	-6.22	QP
0.2540	17.30	10.08	27.38	51.62	-24.24	AVG
0.3578	43.52	10.08	53.60	58.78	-5.18	QP
0.3578	14.41	10.08	24.49	48.78	-24.29	AVG
0.4580	43.12	9.92	53.04	56.73	-3.69	QP
0.4580	19.37	9.92	29.29	46.73	-17.44	AVG
20.8060	40.70	9.92	50.62	60.00	-9.38	QP
20.8060	30.04	9.92	39.96	50.00	-10.04	AVG

Remark:

1. All readings are Quasi-Peak and Average values.
2. Factor = Insertion Loss + Cable Loss.

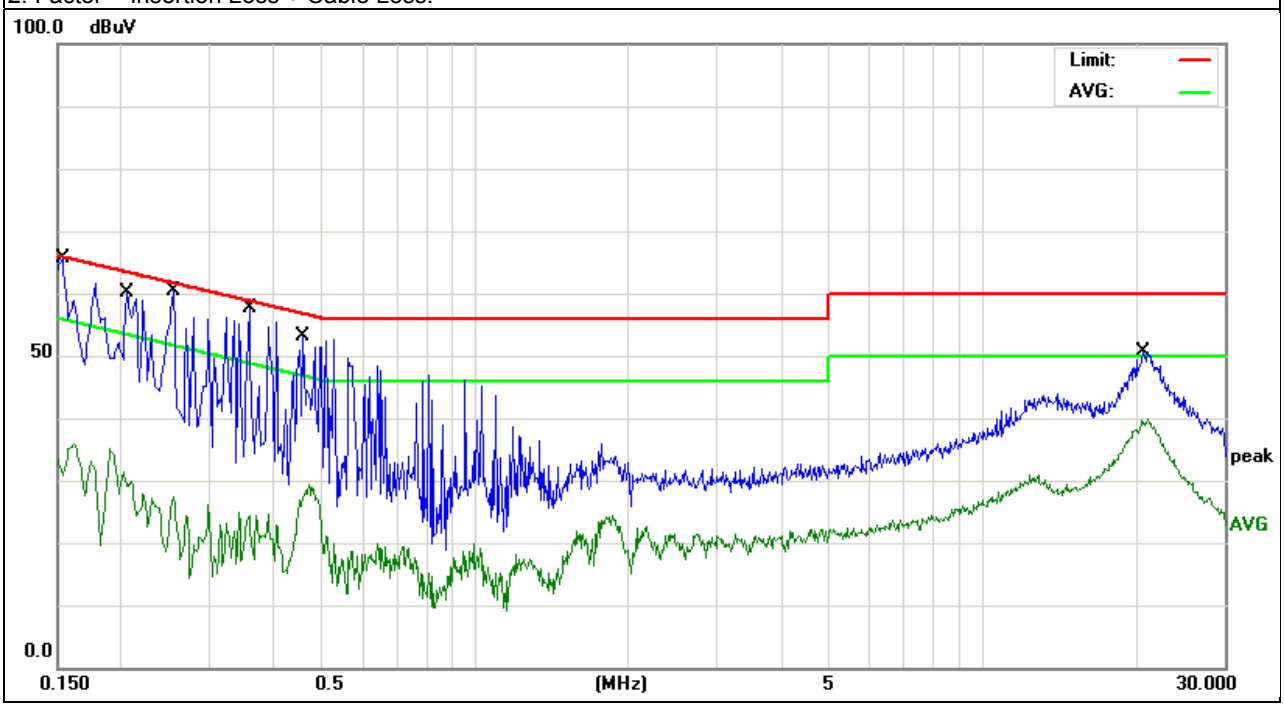

EUT：	DIGITAL ADVERTISEMENT SCREEN	Model Name. ：	ICI156T
Temperature：	26 ℃	Relative Humidity：	54%
Pressure：	1010hPa	Test Date：	2016-3-18
Test Mode：	Mode 1	Phase：	N
Test Voltage ：	120V/60Hz		

Frequency (MHz)	Reading Level (dBμV)	Correct Factor (dB)	Measure-ment (dBμV)	Limits (dBμV)	Margin (dB)	Remark
0.1539	49.72	10.08	59.80	65.78	-5.98	QP
0.1539	27.00	10.08	37.08	55.78	-18.70	AVG
0.2139	45.56	10.04	55.60	63.05	-7.45	QP
0.2139	22.32	10.04	32.36	53.05	-20.69	AVG
0.3140	41.28	10.12	51.40	59.86	-8.46	QP
0.3140	13.18	10.12	23.30	49.86	-26.56	AVG
0.4738	43.24	9.88	53.12	56.45	-3.33	QP
0.4738	19.38	9.88	29.26	46.45	-17.19	AVG
0.7298	39.61	9.82	49.43	56.00	-6.57	QP
0.7298	12.12	9.82	21.94	46.00	-24.06	AVG
20.5700	39.30	9.92	49.22	60.00	-10.78	QP
20.5700	27.59	9.92	37.51	50.00	-12.49	AVG

Remark:

1. All readings are Quasi-Peak and Average values.
2. Factor = Insertion Loss + Cable Loss.

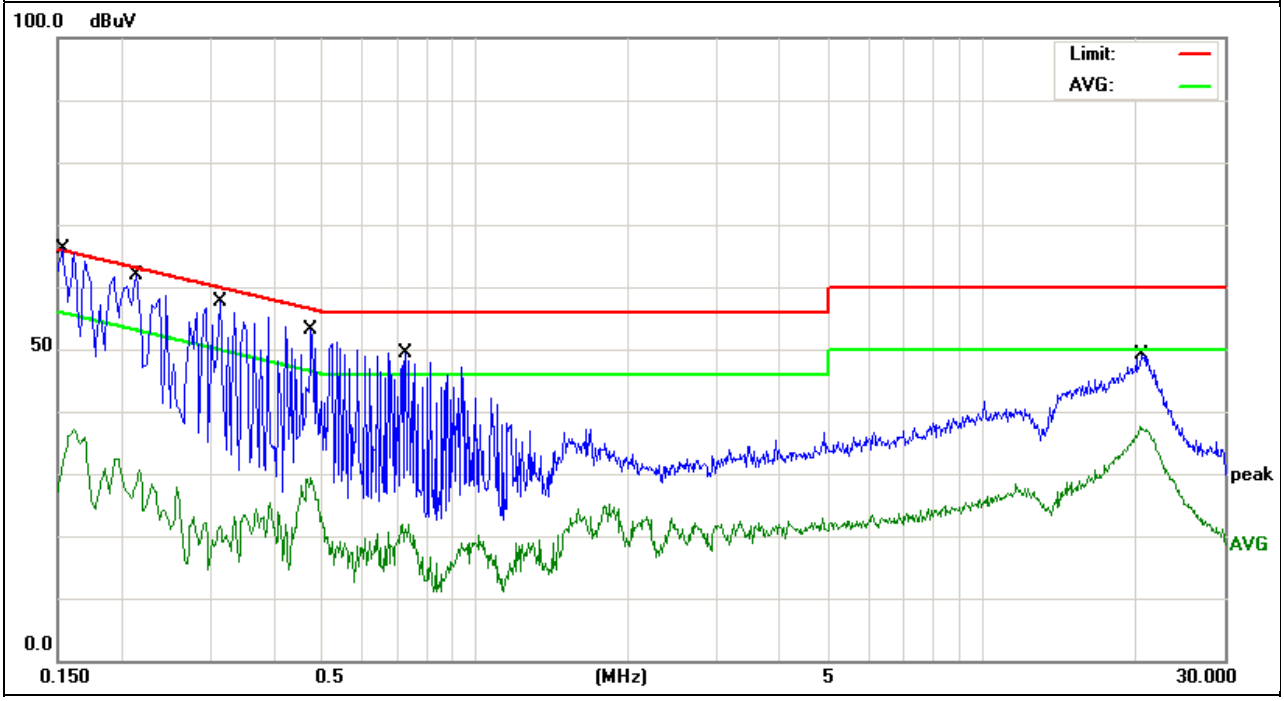

3.2 RADIATED EMISSION MEASUREMENT

3.2.1 LIMITS OF RADIATED EMISSION MEASUREMENT

FREQUENCY (MHz)	Class A (at 10m)	Class B (at 3m)
	dBuV/m	dBuV/m
30 ~ 88	39.0	40.0
88 ~ 216	43.5	43.5
216 ~ 960	46.5	46.0
Above 960	49.5	54.0

Notes:

(1) The limit for radiated test was performed according to as following: FCC PART 15B /ICES-003.

(2) The tighter limit applies at the band edges.

(3) Emission level (dBuV/m)=20log Emission level (uV/m).

3.2.2 TEST PROCEDURE

Test Arrangement for Radiated Emissions up to 1 GHz

a. The EUT was placed on the top of a rotating table 0.8 meters above the ground at an accredited test facility. The table was rotated 360 degrees to determine the position of the highest radiation.

b. The EUT was set 3 meters away from the interference-receiving antenna, which was mounted on the top of a variable-height antenna tower.

c. The antenna is a broadband antenna, and its height is varied from one meter to four meters above the ground to determine the maximum value of the field strength. Both horizontal and vertical polarizations of the antenna are set to make the measurement.

d. For each suspected emission, the EUT was arranged to its worst case and then the antenna was tuned to heights from 1 meter to 4 meters and the rotatable table was turned from 0 degrees to 360 degrees to find the maximum reading.

Note: The resolution bandwidth and video bandwidth of test receiver/spectrum analyzer is 120kHz for quasi-peak detection (QP) at frequency below 1GHz.

Test Arrangement for Radiated Emissions above 1 GHz.

a. The EUT was placed on the top of a rotating table 0.8 meters above the ground at an accredited chamber room. The table was rotated 360 degrees to determine the position of the highest radiation.

b. The EUT was set 3 meters away from the interference-receiving antenna, which was mounted on the top of a variable-height antenna tower.

c. The height of antenna can be varied from one meter to four meters, the height of adjustment depends on the EUT height and the antenna 3dB beamwidth both, to detect the maximum value of the field strength.Both horizontal and vertical polarizations of the antenna are set to make the measurement.

d. For each suspected emission, the EUT was arranged to its worst case and then the antenna was tuned to heights and the rotatable table was turned from 0 degrees to 360 degrees to find the maximum reading.

Note：For the hand-held device, the EUT should be measured for all 3 axes and only the worst

case is recorded in the report

During the radiated emission test, the Spectrum Analyzer was set with the following configurations:

Frequency Band (MHz)	Function	Resolution bandwidth	Video Bandwidth
30 to 1000	QP	120 kHz	300 kHz
Above 1000	Peak	1 MHz	1 MHz
	Avg	1 MHz	10 Hz

3.2.3 TEST SETUP

For Radiated Emission 30~1000MHz

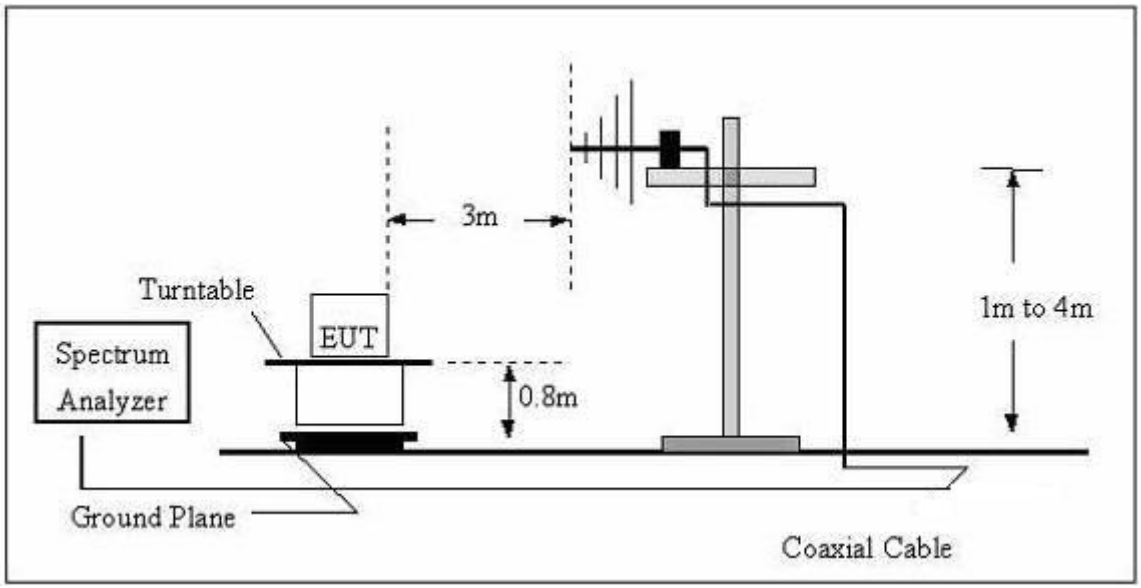

(B) Radiated Emission Test Set-Up Frequency Above 1GHz

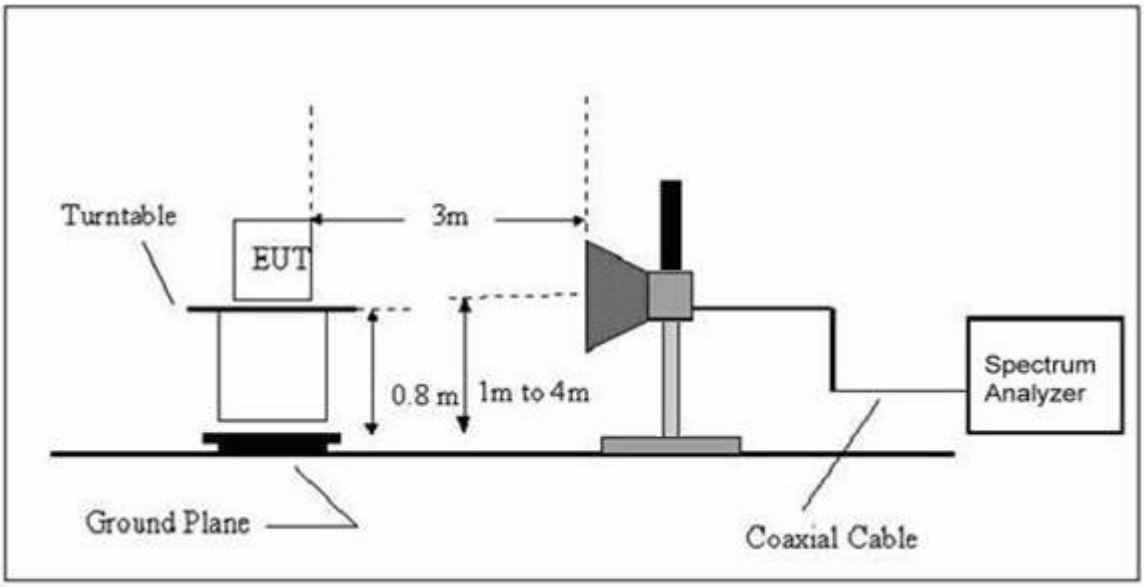

3.2.4 TEST RESULTS

TEST RESULTS (30~1000 MHz)

EUT：	DIGITAL ADVERTISEMENT SCREEN	Model Name ：	ICI156T
Temperature：	24 ℃	Relative Humidity：	54%
Pressure：	1010 hPa	Test Date：	2016-3-18
Test Mode ：	Mode 1	Polarization：	Horizontal
Test Power ：	AC 120V/60Hz		

Freq. (MHz)	Reading (dBuV)	Factor (dBuV)	Measurement (dBuV)	Limit (dBuV)	Over (dB)	Remark
68.8721	20.89	8.45	29.34	40	-10.66	QP
92.4624	17.37	9.95	27.32	43.5	-16.18	QP
191.745	18.65	11.34	29.99	43.5	-13.51	QP
250.3012	20.85	10.88	31.73	46	-14.27	QP
300.3672	18.83	12.6	31.43	46	-14.57	QP
744.8661	20.16	22.04	42.2	46	-3.8	QP

Remark:
Factor = Antenna Factor + Cable Loss - Amplifier.

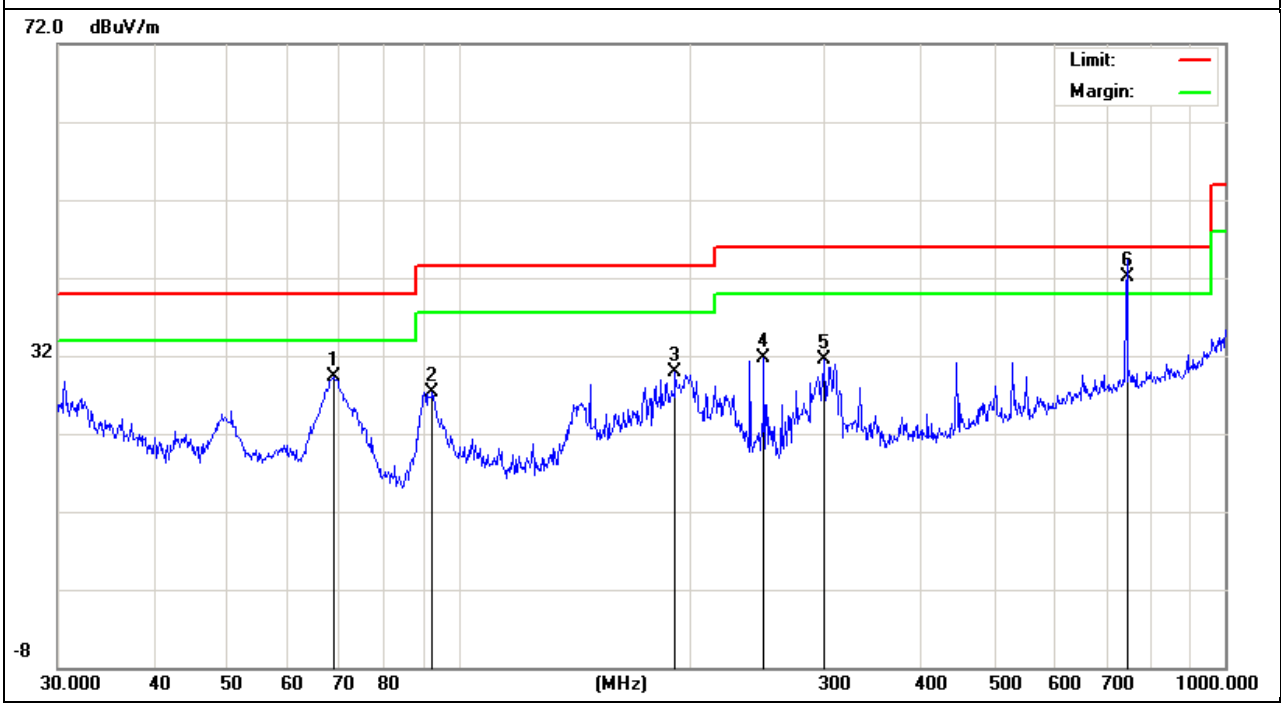

EUT：	DIGITAL ADVERTISEMENT SCREEN	Model Name ：	ICI156T
Temperature：	24 ℃	Relative Humidity：	54%
Pressure：	1010 hPa	Test Date：	2016-3-18
Test Mode ：	Mode 1	Polarization：	Vertical
Test Power ：	AC 120V/60Hz		

Freq. (MHz)	Reading (dBuV)	Factor (dBuV)	Measurement (dBuV)	Limit (dBuV)	Over (dB)	Remark
32.5198	18.49	18.51	37	40	-3	QP
45.2165	25.02	11.41	36.43	40	-3.57	QP
66.2662	27.92	6.58	34.5	40	-5.5	QP
143.3261	22.62	11.19	33.81	43.5	-9.69	QP
468.8761	16.54	16.33	32.87	46	-13.13	QP
747.4825	20.23	22.07	42.3	46	-3.7	QP

Remark:

Factor = Antenna Factor + Cable Loss - Amplifier.

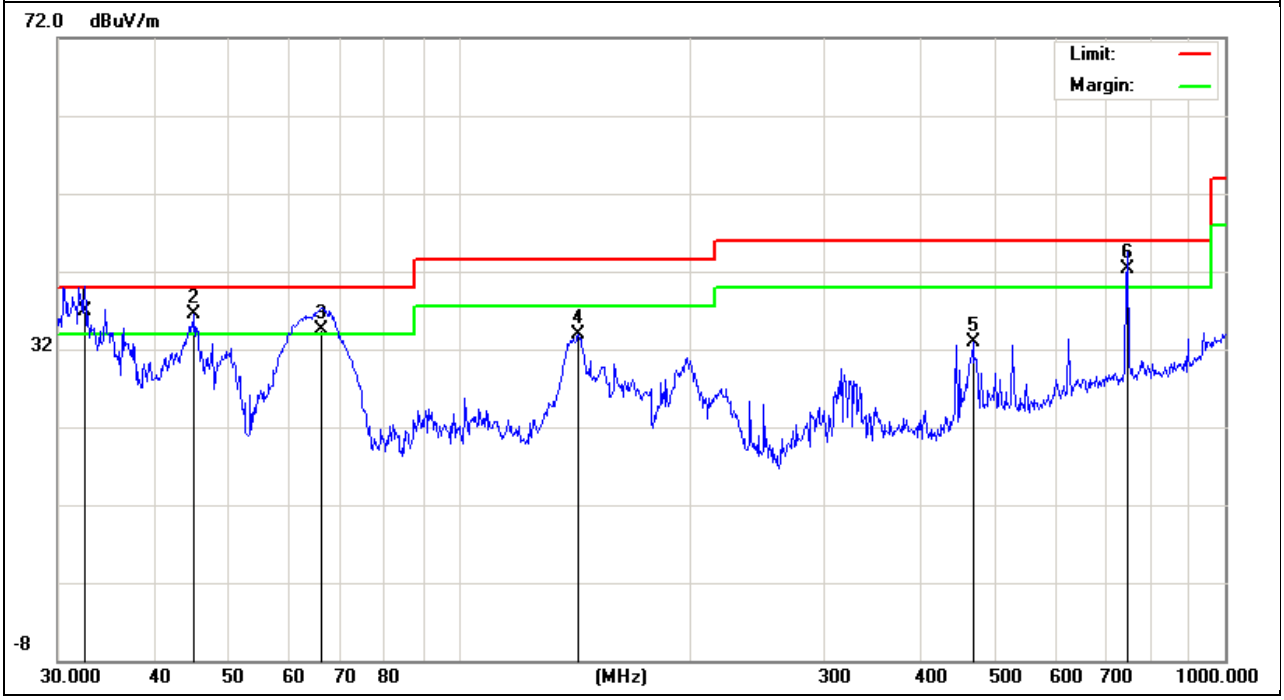

3.2.5 TEST RESULTS(1000~12400MHz)

Polar (H/V)	Frequency (MHz)	Meter Reading (dBm)	Factor (dB)	Emission Level (dBm)	Limits (dBm)	Margin (dB)	Remark
V	1622.187	57.91	-10.61	47.30	74.00	-26.70	peak
V	1622.187	45.11	-10.61	34.50	54.00	-19.50	AVG
V	1875.561	55.80	-9.41	46.39	74.00	-27.61	peak
V	1875.561	44.21	-9.41	34.80	54.00	-19.20	AVG
V	2164.628	55.63	-7.23	48.40	74.00	-25.60	peak
V	2164.628	42.33	-7.23	35.10	54.00	-18.90	AVG
V	2525.249	55.16	-7.56	47.60	74.00	-26.40	peak
V	2525.249	42.86	-7.56	35.30	54.00	-18.70	AVG
H	1926.652	57.87	-9.27	48.60	74.00	-25.40	peak
H	1926.652	49.07	-9.27	39.80	54.00	-14.20	AVG
H	2180.197	57.35	-7.35	50.00	74.00	-24.00	peak
H	2180.197	44.95	-7.35	37.60	54.00	-16.40	AVG
H	2598.691	56.44	-7.04	49.40	74.00	-24.60	peak
H	2598.691	56.44	-7.04	49.40	54.00	-4.60	AVG
H	3245.229	55.51	-5.41	50.10	74.00	-23.90	peak
H	3245.229	42.31	-5.41	36.90	54.00	-17.10	AVG

Remark:
Absolute Level= ReadingLevel+ Factor, Margin= Absolute Level - Limit

4. EUT TEST PHOTO

Radiated Measurement Photos

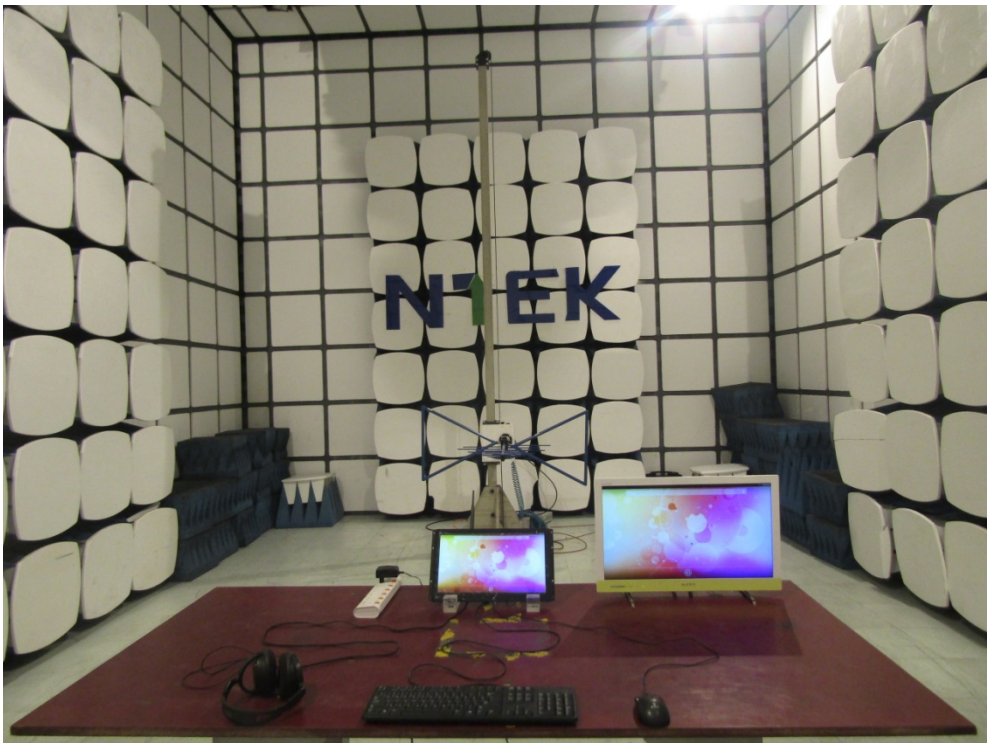

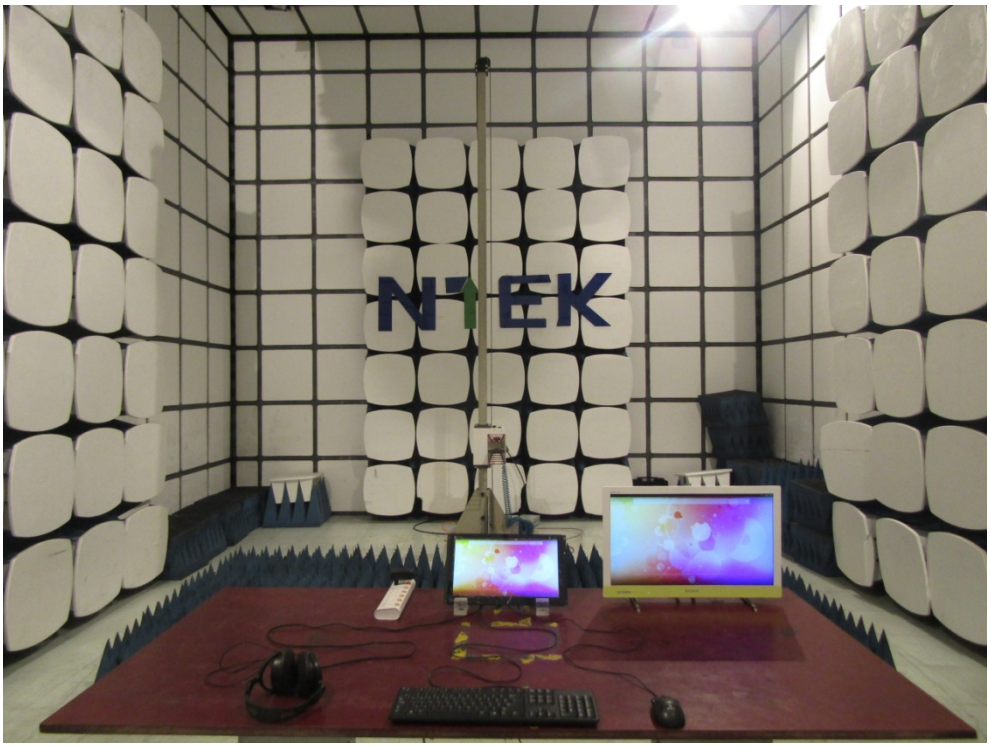

Conducted Measurement Photos