MIRROR DONGLE

Nuvu LLC, 1000 U.S. 9 North
Woodbridge Township NJ 07095
Tel: 1-855-355-6888
www.nuvusound.com

For nuvu in sight headset

Guide No. MD200 QSG

000411 2016 Rev 01

What's in the box?

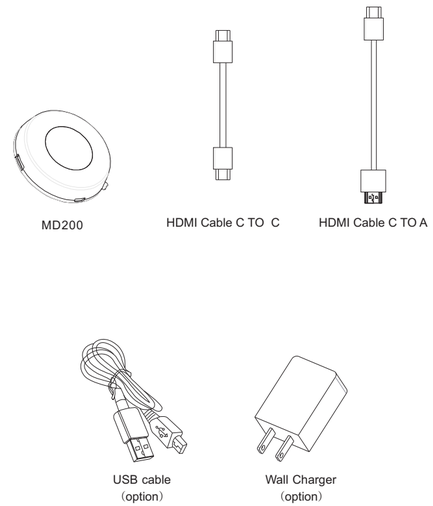

Charging your Mirror Dongle

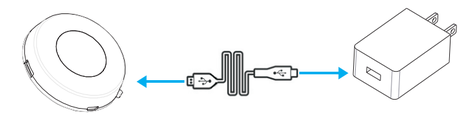

Charge before use

Charge the Mirror Dongle via the USB Charging Cable until the LED indicator turn Red (always on) to Gree (always on).

Note:

- Charge your Mirror Dongle only by wall charger provided.

How to use?

-Press the on/off button to turn on the unit .LED turn "Blue"
-When the unit are in charging wode ,LED turn"Red"
-When the unit was fally charged the "LED" Will tum off

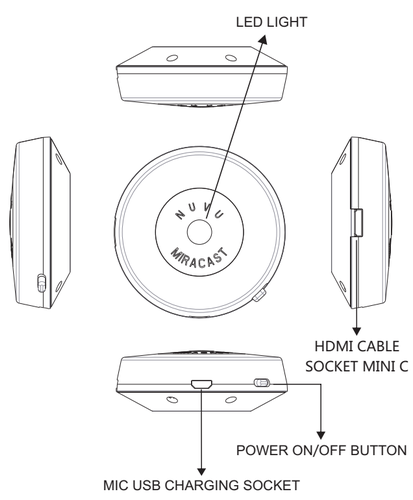

Use for connecting smartphone (with Screen mirroring function) to Nuvu NV5 or NV6 screening mirroring device

A.For NV6

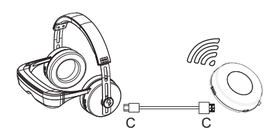

B.For NV5

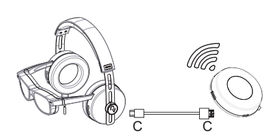

C.For SMART TV

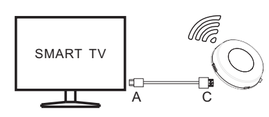

Specification

Item	Specifications and Description
Diameter	Φ70x25mm
Recharger Input	5V/1A
USB WIRE	A TO Mic (Recharger Input :5V/1A, not include)
Battery LI-ION Polymer	3.7v/1200mAh
Charging Time	1.5h
Work Time	>4H
HDMI Socket	HDMI C

NOTE: This equipment has been tested and found to comply with the limits for a Class B digital device, pursuant to part 15 of the FCC Rules. These limits are designed to provide reasonable protection against harmful interference in a residential installation. This equipment generates uses and can radiate radio frequency energy and, if not installed and used in accordance with the instructions, may cause harmful interference to radio communications. However, there is no guarantee that interference will not occur in a particular installation. If this equipment does cause harmful interference to radio or television reception, which can be determined by turning the equipment off and on, the user is encouraged to try to correct the interference by one or more of the following measures:

- Reorient or relocate the receiving antenna.

- Increase the separation between the equipment and receiver.

-Connect the equipment into an outlet on a circuit different from that to which the receiver is connected.

-Consult the dealer or an experienced radio/TV technician for help

Changes or modifications not expressly approved by the party responsible for compliance could void the user's authority to operate the equipment. This device complies with Part 15 of the FCC Rules. Operation is subject to the following two conditions:

(1) this device may not cause harmful interference, and

(2) this device must accept any interference received, including interference that may cause undesired operation.