Note: Below data applicable for SNS412 MC..

Electrical Information	
Input Voltage	Powered by SR driver low-voltage interface
Current Consumption	13mA
Nominal Power Consumption	200mW
Standby Power	< 1 W on luminaire level, including driver standby power
Environment & Approbation	
Operating Ambient Temperature Range	-30°C to 65°C
Operating Humidity	20% – 85% non condensing
Storage Temperature	-30 °C - 85 °C
Storage Humidity	0-95% non condensing
Max Case Temperature (Tcase)	65°C
Agency Approbations	UL, FCC; Tested and approved for use in plenums
Limited Warranty	5 years
Digital Interface	Xitanium SR
Other	
Status Indicators	Yellow LED always on
No. Drivers per Node	Four (max)
Field Configuration	via BLE, parameters set via Philips MasterConnect App

Operation and Configuration via Mobile App
SNS412 MC requires commissioning to operate. The node can be commissioned and configured via the Philips MasterConnect app through Bluetooth LE. For a complete description of the features and default settings—as well as details on the app—refer to www.philips.com/easysense.

FCC and IC Statement
This equipment has been tested and found to comply with the limits for a Class A digital device, pursuant to part 15 of the FCC Rules for the United States and Industry Canada (IC) license-exempt RSS standard(s). These limits are designed to provide reasonable protection against harmful interference when the equipment is operated in a commercial environment and is intended for commercial use only. This equipment generates, uses, and can radiate radio frequency energy and, if not installed and used in accordance with the instruction manual, may cause harmful interference to radio communications. Operation is subject to the following two conditions: (1) This device may not cause harmful interference, and (2) this device must accept any interference received, including interference that may cause undesired operation. Operation of this equipment in a residential area is likely to cause harmful interference in which case the user will be required to correct the interference at his own expense. Any changes or modifications not expressly approved by Signify could void the user's authority to operate this equipment.

This equipment should be installed and operated with a minimum distance of 20cm between the radiator and your body.

Déclaration De Conformité À La Fcc/Ic
Cet équipement a été testé et jugé conforme aux limites d'un appareil numérique de classe A, conformément à la partie 15 des règles de la FCC pour les États-Unis et à la/les norme(s) liée(s) à RSS exempt(e)s de licence d'Industrie Canada (IC). Ces limites sont conçues pour fournir une protection raisonnable contre les interférences nuisibles lorsque l'équipement est utilisé dans un environnement commercial et est destiné à un usage commercial uniquement. Cet équipement génère, utilise et peut émettre de l'énergie radiofréquence et, s'il n'est pas installé et utilisé conformément au manuel d'instructions, peut causer des interférences nuisibles aux communications radio. L'exploitation est soumise aux deux conditions suivantes : (1) Cet appareil ne doit pas causer d'interférences nuisibles, et (2) cet appareil doit accepter toute interférence reçue, y compris les interférences pouvant provoquer un fonctionnement indésirable. L'exploitation de cet équipement dans une zone résidentielle est susceptible de provoquer des interférences nuisibles, auquel cas l'utilisateur sera tenu de corriger les interférences à ses frais. Tout changement ou modification non expressément approuvé par Signify pourrait annuler l'autorisation de l'utilisateur d'utiliser cet équipement.

Cet équipement doit être installé et utilisé avec une distance minimale de 20 cm entre le radiateur et votre corps.

© 2023 Signify Holding. All rights reserved. The information provided herein is subject to change, without notice. Signify does not give any representation or warranty as to the accuracy or completeness of the information included herein and shall not be liable for any action in reliance thereon. The information presented in this document is not intended as any commercial offer and does not form part of any quotation or contract, unless otherwise agreed by Signify. Philips and the Philips Shield Emblem are registered trademarks of Koninklijke Philips N.V. All other trademarks are owned by Signify Holding or their respective owners.
philips.com/easysense

Signify North America Corporation
400 Crossing Blvd, Suite 600
Bridgewater, NJ 08807
Tel. 855-486-2216

Signify Canada Ltd.
281 Hillmount Rd.,
Markham, ON, Canada L6C 2S3
Tel. 800-668-9008

EasySense SNS412 MC QIG 02/2023

PHILIPS

Wireless Node

EasySense

Fixture-Mount

Philips EasySense **Quick Installation Guide**

Wireless Node Part Number

Commercial Product Name	Order Code
EasySense SNS412 MC	SNS412 MC,12NC:929003416513

LED Drivers

The EasySense SNS412 MC sensors are compatible with Xitanium SR drivers. To find the SR driver that fits your application needs and for product specifications, please visit www.signify.com/xitaniumsr

Wiring Diagram*

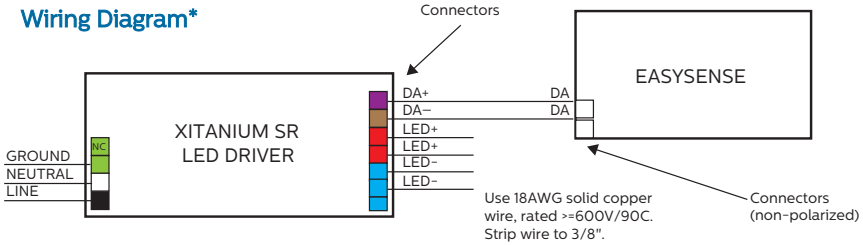

Connection	Color
Green	Ground
White	Neutral
Black	Line

Connection	Color
Purple	DA+
Brown	DA–
Red	LED+
Blue	LED–

* Wiring diagram for 40W driver shown. Other drivers have different wiring diagrams. Consult datasheet for driver for applicable wiring diagram.

Sensor Dimensions (in/mm)

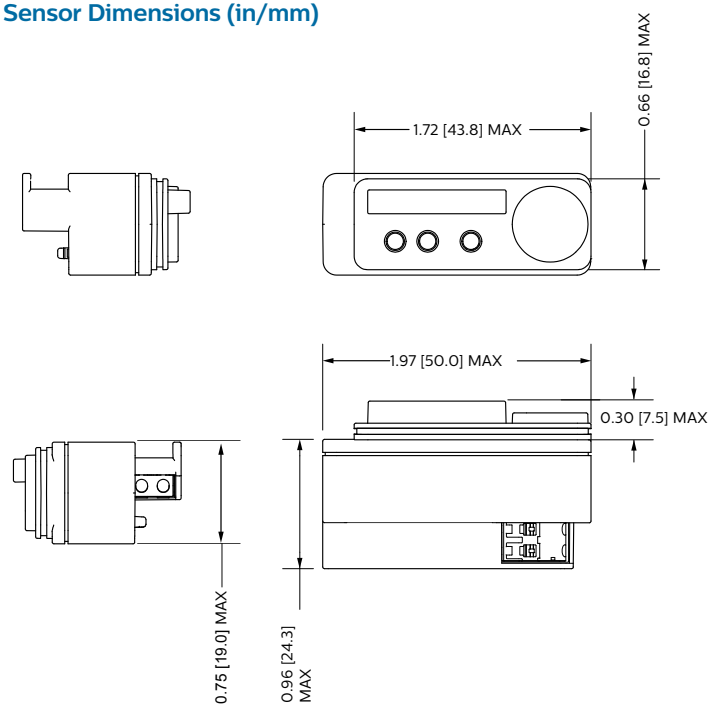

Mounting Dimensions (in/mm)

Mounting in U-shaped slot in sheet metal (max thickness 1 mm)

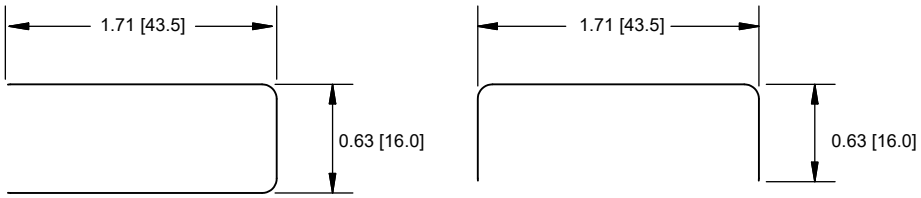

Mounting in cut-out in sheet metal (thickness 0.7 mm to 1.0 mm)

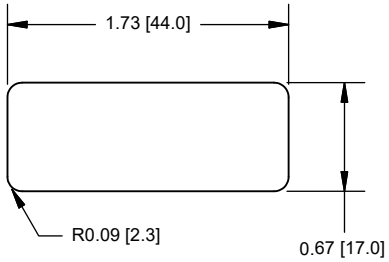

Note: Consult factory for accessory mounting ring to secure sensor to cut-out.

Fixture with EasySense installed

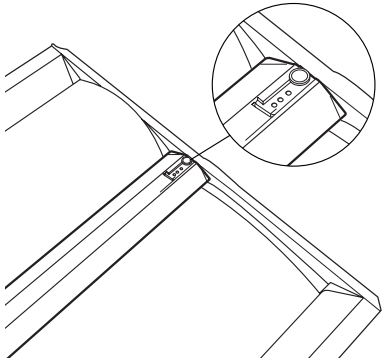

Mounting in a slot

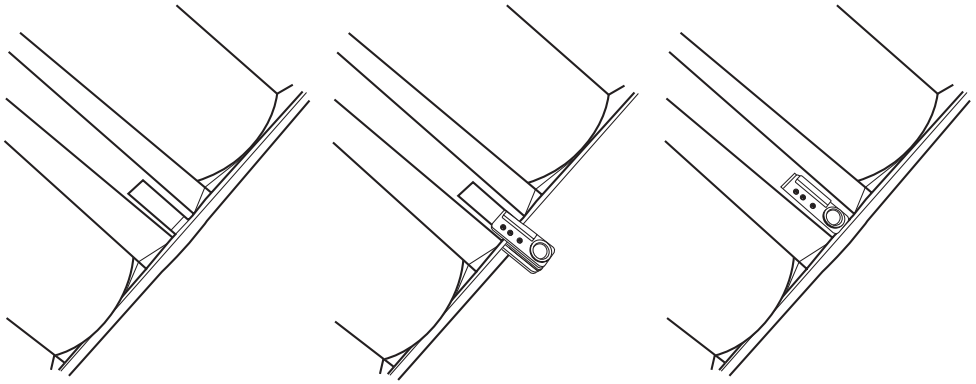

Mounting in a cut-out with mounting bracket

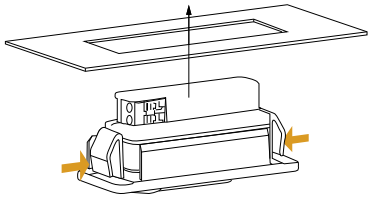

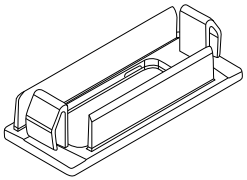

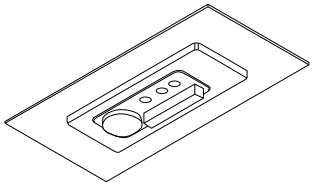

Accessory Mounting Ring

- Part Number SMR-50 / Set of 50.
- Ordered separately, not included.

Accessory Mounting Bracket

- Part Number SMB-50 / Set of 50.
- - Ordered separately, not included.