AES-MS-MT3620-M-G-3
Azure Sphere
MT3620 module
(chip antenna version)

Features

- Microsoft Azure Sphere SoC based module solution for advanced end-to-end IOT security
- Based on MT3620AN Wi-Fi SoC
  - 1x 500MHz Arm Cortex A7 application processor with 4MB SRAM
  - 2x 200MHz Arm Cortex M4F cores, each with 64KB SRAM
  - 4MB embedded RAM (shared)
  - 16MB QSPI flash memory
  - Dual-band 2.4/5GHz 802.11 a/b/g/n Wi-Fi
  - Client device that relies on the AP device to provide the proper channel
- Module I/O peripheral support
  - 3x ISU interfaces, configurable as UART / SPI / I2C / GPIO
  - ADC/GPIO: 3x 12-bit ADC inputs (or GPIOs)
  - PWM/GPIO: 9x PWM outputs (or up to 24 GPIOs)
  - RTC (requires VBAT supply)
  - Programming & recovery interface
- Microsoft Visual Studio IDE for accelerated application software development & debug
- OTA authentication & updates (device lifetime)
- Dimensions: 33mm x 22mm x 3.5mm
- Onboard dual-band 2.4/5GHz chip antenna
  - (Pulse W3006)
- Operating temperature:
  - -35C to +85°C
    (Note: For industrial temperature range, please use the U.FL version module)
- Certifications:
  - FCC, IC, CE, RoHS

Applications

- IoT edge devices
- Smart home appliances / security
- Smart retail
- Remote access
- Building automation
- Factory automation

For more info on Azure Sphere MT3620 modules, visit: http://avnet.me/mt3620-modules

For the summarized Product Brief, visit: http://avnet.me/mt3620-module-pb

To purchase an Azure Sphere MT3620 Starter Kit visit: http://avnet.me/mt3620-kit

Note: For the latest MT3620 support status, visit: https://docs.microsoft.com/en-us/azure-sphere/hardware/mt3620-product-status

Document Control

Version: 1.0
Date: 09/06/2022
Author: Peter Fenn
Classification: Public
Distribution: Public

Version History

Version	Date	Comment
1.0	09/06/2022	Initial release for AES-MS-MT3620-M-G-3
1.1	09/07/2022	Add debug interface details in appendix
1.2	09/22/2022	Add additional Canada statement, add T&C URL
1.3	09/27/2022	Add statement about device being a client device
1.4	9/27/2022	Update pictures of the module to include the correct label

Ordering Information

Part Number	Description
AES-MS-MT3620-M-G-3	Azure Sphere MT3620 Module (chip antenna) Product Page: http://avnet.me/mt3620-modules
AES-MS-MT3620-SK-G-3	Azure Sphere MT3620 Starter Kit Product Page: http://avnet.me/mt3620-kit

Contents

Features 1
Applications 1
Document Control 2
Ordering Information 2
Overview 6
Module Block Diagram 7
Module Application Development and Programming 8
- Development Computer Software Installation 8
- Module Interfaces with the Development Computer 8

Module Integration onto an OEM Board 9
- Module Power Interfaces 9
- Wi-Fi Network Settings 9
- Wi-Fi Subsystem 10
- Wi-Fi Antenna 10
- A7 Application Processor 10
- M4F IO Processors 10
- Flash Memory 10
- Pluton Security Subsystem 10
- Real Time Clock (RTC) 10
- Peripheral Serial Interfaces 10
- Other I/O Interfaces 10
- MT3620 Bootstrap Pins 11
- Module Placement and Ground plane requirements 12
- Module Pinout Locations 13
- Module Pinout Table 14

Electrical Specifications 16
- Absolute Maximum Ratings 16
- Recommended Operating Conditions 16
- DC Characteristics 16
- Current Consumption 17

RF Characteristics 18
- Wi-Fi 2.4GHz Band RF Receiver Specifications 18
- Wi-Fi 2.4GHz Band RF Transmitter Specifications 20
- Wi-Fi 5GHz Band RF Receiver Specifications 21
- Wi-Fi 5GHz Band RF Transmitter Specifications 22
- Wi-Fi RF Receiver Blocking Specifications 23

Mechanical Specifications 24
Module Dimension Details 24
Tape and Reel Packaging 25
Soldering and Cleaning Recommendations 26
Optimum Soldering Reflow Profile 26
Cleaning 26
Certifications and Compliance 27
RoHS Compliance 27
Regulatory Compliance 27
FCC and ISED Regulatory Notices (USA and Canada) 28
Modification statement 28
Interference statement 28
RF Radiation Exposure Statement 28
FCC Class B Digital Device Notice (USA) 28
FCC Module Statement (USA) 29
CAN ICES-003 (B) 29
Labeling Requirements for the OEM Host Board 29
FCC Requirements for User Manual of the OEM Host Board: 29
IC Requirements for User Manual of the OEM Host Board: 30
FCC Host 15B and 15C Compliance Statement (USA) 31
CE Statement (Europe) 31
CE Labeling Requirements (Europe) 31
OEM Instructions 31
Shipping, Handling and Storage 32
Shipping 32
Handling 32
Moisture Sensitivity (MSL) 32
Storage 32
Contact Information 33
Legal Information 33
Appendix-A: Programming Adaptor Footprint 34
Recovery: 35
Service/Debug: 35
SWD: 35
Master Port: 36

Table of Figures

Figure 1 – Simplified MT3620 SoC Block Diagram 6
Figure 2 – AES-MS-MT3620-M-G-3 Module Block Diagram 7
Figure 3 – Module with Dual-band Chip Antenna 10
Figure 4 – OEM board Footprint for AES-MS-MT3620-M-G-3 Module 12
Figure 5 – AES-MS-MT3620-M-G-3 Module Pinout (Rev.2 Module) 13
Figure 6 – AES-MS-MT3620-M-G-3 Module Mechanical Details 24
Figure 7 – Tape and Reel Details 25
Figure 8 – Recommended Soldering Profile for Lead-Free Solder 26
Figure 9 – Sphere Programming Interface Dongle 34
Figure 10 – Tag-Connect TC2050-IDC Cable Adapter 36

Overview

AES-MS-MT3620-M-G-3 is a small form-factor, tri-core Wi-Fi SoC module, intended for use as a secure Wi-Fi client, in internet-connected IoT applications. Avnet's production-ready, certified module comes fitted with a dual-band chip antenna and is ideal for secure applications in 2.4 GHz or 5GHz Wi-Fi networks.

Based on the MT3620AN SoC, this is a new class of connected SoC IoT device that facilitates "end-to-end security". User applications can target it's 500 MHz ARM Cortex-A7 core as well as two general purpose 200 MHz ARM Cortex-M4F I/O subsystem cores designed to support real-time requirements. The on-chip peripherals (GPIO, UART, I2C, SPI, I2S, PWM and ADC) can be mapped to any of these three user-accessible processor cores.

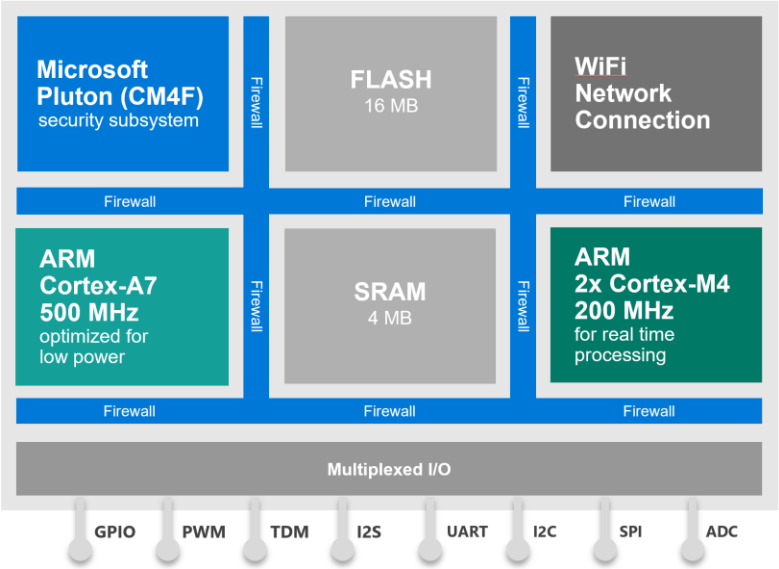

Figure 1 – Simplified MT3620 SoC Block Diagram

Further differentiators of the MT3620 device are its built-in Pluton security subsystem (with dedicated CM4F core) for secure boot and secure system operation, its dual-band 802.11 b/g/n Wi-Fi connectivity, as well as integration of on-chip PMU, RTC plus FLASH and SRAM memory. Wi-Fi based OTA firmware and user application updates (using certificate-based authentication) are hosted by Microsoft for the device lifetime.

The Cortex-A7 application processor runs Microsoft's Azure Sphere Secure OS. Custom user applications are developed in C using Microsoft's Visual Studio IDE, which includes user-friendly debugging features such as single-step execution, breakpoints, and watch-points (supported via a dedicated service UART).

The module facilitates easy design migration and end-product enhancements, integrating the MT3620 device, 26MHz crystal oscillator, on-board chip antenna (Pulse W3006) plus associated RF front end circuitry onto a small 33 mm x 22 mm form-factor module (castellated 66 pad stamp footprint), reducing the design time for implementing Sphere-based solutions. The module's wireless regulatory certifications also reduce end-product certification costs and facilitate faster time to market.

Microsoft Visual Studio or Visual Studio Code IDEs are used for development of secure embedded software applications targeting this module. Instructions for installing the development environment, including the Azure Sphere SDK application and necessary drivers, are detailed (with examples) in the User Guide for Avnet's Azure MT3620 Sphere Starter Kit

Online authentication and firmware updates are supported for the MT3620 device lifetime.

Module Block Diagram

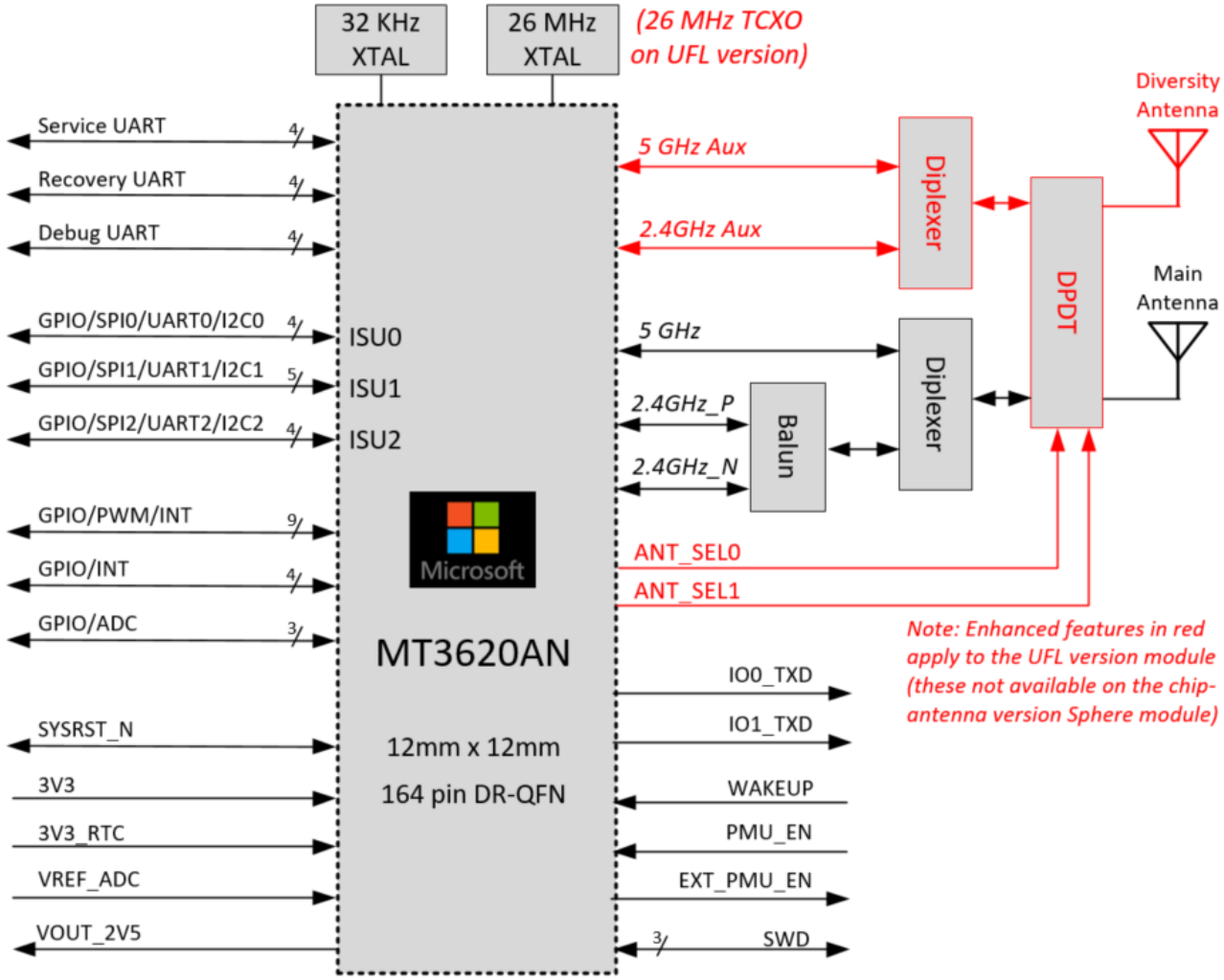

Figure 2 – AES-MS-MT3620-M-G-3 Module Block Diagram

From **Rev.2** onwards, the Azure Sphere module features two key enhancements:

a) ISU2 is no longer limited to only I2C use (two additional ISU2 signals are pinned-out, which allows ISU2 to be configured for SPI, UART, I2C or GPIO operation)

b) A pullup resistor change now ensures that Powerdown mode can be entered

Module Application Development and Programming

Development Computer Software Installation

In depth instructions are provided at the Microsoft **Getting started with Azure Sphere** webpage: https://aka.ms/AzureSphereSDK

Microsoft's **Getting Started with Azure Sphere** page details the download & install of two software items:
1) Azure Sphere SDK
2) Visual Studio 2019/2022 or Visual Studio Code
Microsoft's **Azure Sphere SDK** provides the following:

- The azsphere command-line utility for managing devices, images, and deployments
- Libraries for application development
- Visual Studio extensions to support Azure Sphere development, debug, and flash programming

Microsoft's **Visual Studio/Visual Studio Code IDE** provides a sophisticated development environment for editing, building, and debugging custom embedded C applications (a GCC cross-compiler and GDB debugger provide the underlying build and debug tools)

For application development targeting this module, it is recommended that hardware and software prototyping be done using the Avnet **Azure Sphere MT3620 Starter Kit** http://avnet.me/mt3620-kit)

Module Interfaces with the Development Computer

The module is designed to support up to four wired interfaces with the development computer.

- Three 4-wire UART interfaces (SERVICE, RECOVERY and DEBUG) dedicated for connection with the host development computer are pinned-out, each with hardware flow-control.
- A 3-wire SWD interface is also pinned-out
- RESET and RECOVERY (via DEBUG_RTS during boot) signals determine the module operating mode

Module Integration onto an OEM Board

Module Power Interfaces

To power this module, the OEM board must be able to supply a maximum of 2.5 Watts at 3.3V.

Prior to power-up of the module, the following interfaces need to be attended to:

Interface Pins	Description	Notes
3V3	Main input voltage to the module. 3.3V (+/- 10%)	Powered by an external PMU or DC/DC convertor
3V3_RTC	Real Time Clock power input to module	Powered by external battery, or connect this to the 3V3 rail
VREF_ADC	Reference voltage for on-chip A/D convertor	Powered by external reference voltage, or connect to the MT3620 2.5V LDO output
EXT_PMU_EN	MT3630 output to enable / disable external PMU or DC/DC convertor	May be left unconnected
PMU_EN	MT3630 input to enable / disable the internal PMU	May be left unconnected
WAKEUP	MT3630 input to wake-up the A7 processor from power-saving sleep mode	May be left unconnected

Wi-Fi Network Settings

For Wi-Fi connected user applications, the module's Wi-Fi network settings need to be configured by one of the following methods:

a) In application software (#define statements), that is factory-programmed into module by the OEM

b) Via a companion BLE device integrated onto the OEM's end-product board (Microsoft provides an example based on the Nordic nRF52840 device)

c) Via the SERVICE UART interface with a development computer running the azsphere command-line utility (See separate App Note that details suggested PCB footprint to support temporary attachment of an FTDI FT4232HQ based USB to serial adaptor)

Upon power-up and connection to the designated Wi-Fi network, the module will communicate with the Microsoft Azure Sphere Security Service, which authenticates and manages one or more of the following downloads/uploads with the module:

- Push of Azure Sphere OS firmware updates to the module
- Deployment of custom application software to the module
- Reporting of Sphere OS and application versions plus error information to the Azure Sphere Server

The Microsoft Azure Sphere Security Service will also authenticate data transfers between the custom user application executing on the module and Microsoft Azure (or other) cloud services

Wi-Fi Subsystem

- Dual-band 2.4/5GHz 802.11 b/g/n Wi-Fi (20 MHz channels only)
- Has an N968 Andes 32bit MCU
- Uses an external 26 MHz crystal oscillator on the module
- Has an integrated 5GHz Balun
- Uses external 2.4GHz Balun and Diplexer devices on the module

Wi-Fi Antenna

- The module is fitted with an on-board dual-band chip antenna for 2.4GHz and 5GHz operation (Pulse Electronics antenna p/n: W3006)
- An inline switched RF probe connector is provided to facilitated RF conducted measurements

Figure 3 – Module with Dual-band Chip Antenna

A7 Application Processor

- 1x 500MHz Arm Cortex A7 application processor core, with 4MB SRAM (shared)

M4F IO Processors

- 2x 200MHz Arm Cortex M4F IO processor cores, each with 64KB SRAM
- The module pins-out the IO0_TXD and IO1_TXD pins from their dedicated UARTs
- SWD interface-based debug and programming of M4F IO MCU cores may at later date be enabled

Flash Memory

- 16MB 100MHz (on-die) QSPI flash memory

Pluton Security Subsystem

- 1x Cortex M4F MCU, dedicated RAM, ROM and GP timers, system control outputs

Real Time Clock (RTC)

- Low-power RTC with timer/time of day control over system power (32KHz crystal oscillator)

Peripheral Serial Interfaces

Three ISU serial interfaces are pinned-out. Their operating mode is user-configurable for SPI, UART, I2C or GPIO operation. Maximum data-rates in their serial peripheral modes are as follows:

- UART : max rate of 3 Mbps
- SPI : max rate of 40 MHz
- I2C : max rate of 1 MHz

Other I/O Interfaces

All pinned-out I/O pins (including ISU interfaces listed above) can be individually configured as GPIO pins. A subset of these can be configured as:

- PWM outputs
- ADC inputs
- EXT INT inputs

MT3620 Bootstrap Pins

Note! Six of the seven bootstrap pins are already strapped on the module.

The **DEBUG_RTS** signal **must** however be strapped on the OEM board with a 2K2 pull-down resistor, to ensure that RECOVERY mode remains disabled (This signal gets driven high to select RECOVERY via an FTDI device based interface with the development computer when a Debug-Programmer cable is attached)

Function	Pin Name	Strapping	Recommendation
Normal/Test mode	DEBUG_TXD	Pull-Down	Pull-down resistor on module **Mode = Normal**
Recovery mode	DEBUG_RTS	Pull-Down	Pull-down resistor **required** on OEM board! **Controlled via PC interface, - if present**
RTC mode	RECOVERY_TXD	Pull-Up	Pull-up resistor on module **RTC oscillator = 32 kHz crystal**
26MHz	IO0_RTS	Pull-Up	MT3620 internal pull-up on module **Oscillator frequency = 26 MHz**
26MHz	IO0_TXD	Pull-Down	Pull-down resistor on module **Oscillator frequency = 26 MHz**
N9 JTAG	IO1_TXD	Pull-Down	Pull-down resistor on module **N9 JTAG = OFF**
A7 JTAG	RECOVERY_RTS	Pull-Down	Pull-down resistor on module **A7 JTAG = OFF**

See the **MT3620 Product Brief** at the following webpage for more detail on the **MT3620AN** SoC device…
https://www.mediatek.com/products/azureSphere/mt3620

Module Placement and Ground plane requirements

- For optimum antenna performance the Ground plane of the OEM board (on which the module is fitted) needs to be maximized
- The GND pads in the antenna area of the module must be connected to this Ground plane
- Placement of the module should be 6 mm or more from any corner of the OEM carrier board
- A PCB cutout is recommended in the host carrier board beneath the chip antenna (17mm x 7mm)

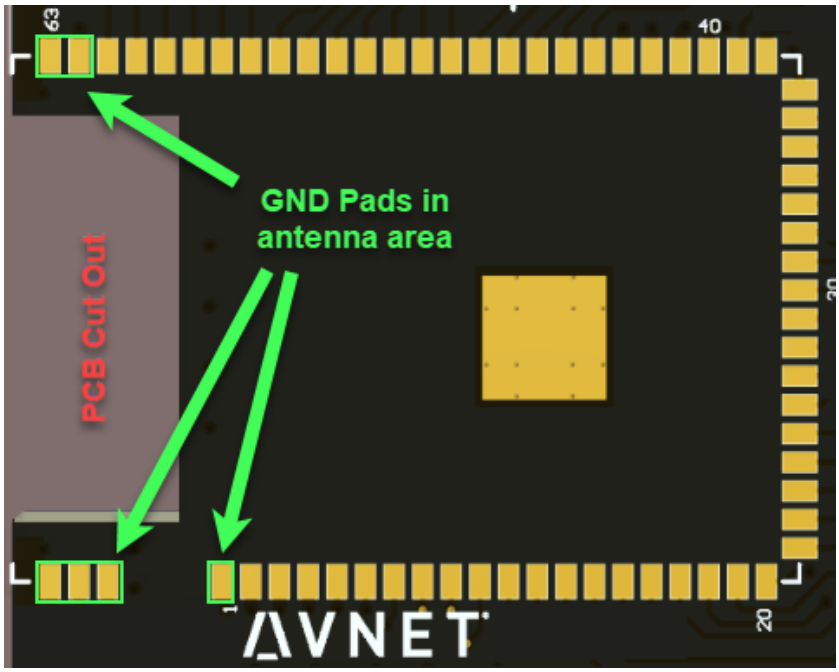

Figure 4 – OEM board Footprint for AES-MS-MT3620-M-G-3 Module

Module Pinout Locations

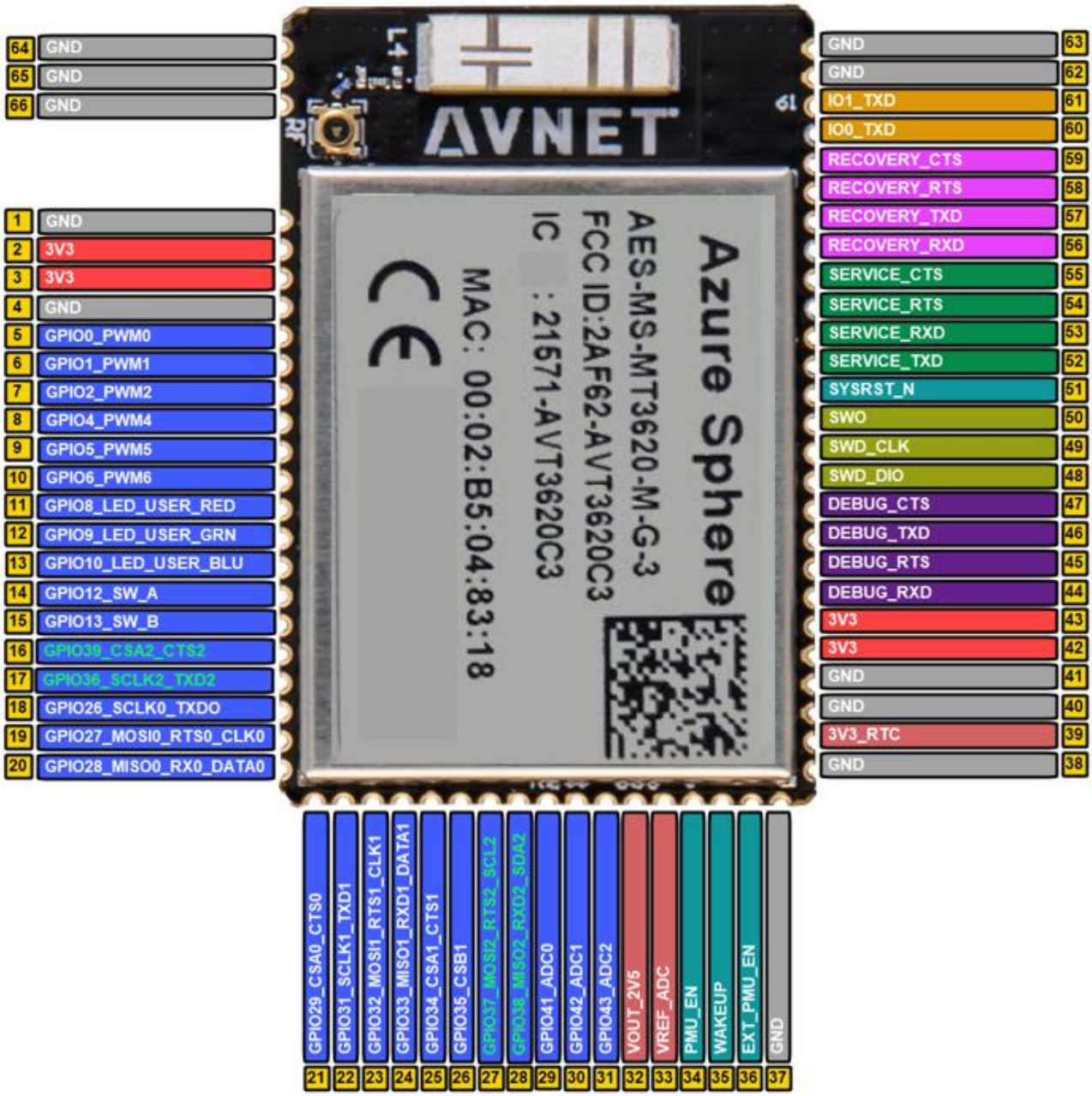

Figure 5 – AES-MS-MT3620-M-G-3 Module Pinout (Rev.2 Module)

Note!
Pad 16: Changed to **GPIO39** on Rev.2 module (was GPIO16 on Rev.1 module)
Pad 17: Changed to **GPIO36** on Rev.2 module (was GPIO17 on Rev.1 module)

Module Pinout Table

Module Pad	MT3620 Pad	MT3620 Net Name	I/O	Pin Function	Rev.2 Starter Kit Blue = Default Function
1		GND	GND		
2	2,3	3V3	Power		
3	2,3	3V3	Power		
4			GND		
5	13	GPIO0_PWM0	I/O	GPIO / INT in / PWM out	**PWM CLICK1** *and* **GPIO LED_WIFI**
6	14	GPIO1_PWM1	I/O	GPIO / INT in / PWM out	**PWM CLICK2** **PMOD Pin 9 (DFU)**
7	15	GPIO2_PWM2	I/O	GPIO / INT in / PWM out	**RST CLICK1**
8	17	GPIO4_PWM4	I/O	GPIO / INT in / PWM out	**GPIO4_LED_APP**
9	18	GPIO5_PWM5	I/O	GPIO / INT in / PWM out	**INT CLICK1**
10	19	GPIO6_PWM6	I/O	GPIO / INT in / PWM out	**INT LSM6DSO**
11	21	GPIO8_PWM8	I/O	GPIO / INT in / PWM out	**GPIO8_LED_USER_RED**
12	22	GPIO9_PWM9	I/O	GPIO / INT in / PWM out	**GPIO9_LED_USER_GRN**
13	25	GPIO10_PWM10	I/O	GPIO / INT in / PWM out	**GPIO10_LED_USER_BLU**
14	27	GPIO12	I/O	GPIO / INT in	**GPIO12_SW_A**
15	28	GPIO13	I/O	GPIO / INT in	**GPIO13_SW_B**
16	31	GPIO39_CSA2_CTS2	I/O	GPIO / ISU2	**Pmod Pin 7** (Status/Int)
17	32	GPIO36_SCLK2_TXD2	I/O	GPIO / ISU2	Grove Pin 1 (TX2)
18	39	GPIO26_SCLK0_TXD0	I/O	GPIO / ISU0	**SCLK0** / TX0
19	40	GPIO27_MOSI0_RTS0_SCL0	I/O	GPIO / ISU0	**MOSI0** / RTS0 / SCL0
20	42	GPIO28_MISO0_RXD0_SDA0	I/O	GPIO / ISU0	**MISO0** / RX0 / SDA0
21	43	GPIO29_CSA0_CTS0	I/O	GPIO / ISU0	**CSA0** / CTS0
22	46	GPIO31_SCLK1_TXD1	I/O	GPIO / ISU1	**TX1** / SCLK1
23	47	GPIO32_MOSI1_RTS1_SCL1	I/O	GPIO / ISU1	**RTS1** / MOSI1 / SCL1
24	48	GPIO33_MISO1_RXD1_SDA1	I/O	GPIO / ISU1	**RXD1** / MISO1 / SDA1
25	49	GPIO34_CSA1_CTS1	I/O	GPIO / ISU1	**CTS1** / CSA1
26	50	GPIO35_CSB1	I/O	GPIO / ISU1	**RST Click2, Pmod Pin 8**
27	52	GPIO37_MOSI2_RTS2_SCL2	I/O	GPIO / ISU2	**SCL2** / RTS2
28	53	GPIO38_MISO2_RXD2_SDA2	I/O	GPIO / ISU2	**SDA2** / RX2
29	58	GPIO41_ADC0	I/O	GPIO / ADC in	**AMBIENT LIGHT SENSOR**
30	59	GPIO42_ADC1	I/O	GPIO / ADC in	**AN CLICK1**
31	60	GPIO43_ADC2	I/O	GPIO / ADC in	**AN CLICK2**
32	66	VOUT_2V5	AO		
33	67	VREF_ADC	AI		min 1.8V, max 2.5V
34	81	PMU_EN	I		pull-up on module
35	70	WAKEUP	I	Ext. Wakeup Input	pull-up on module
36	69	EXT_PMU_EN	O	Ext. 3V3 regulator enable	
37		GND	GND		

Note! Highlighted items indicate changes from Rev.1 Azure Sphere Starter Kit hardware
Pad 16: Changed to **GPIO39** on Rev.2 module (was GPIO16 on Rev.1 module)
Pad 17: Changed to **GPIO36** on Rev.2 module (was GPIO17 on Rev.1 module)

Module 2.0 Pinout Detail (continued)

Module Pad	MT3620 Pad	MT3620 Net Name	I/O	Pin Function	Pre-Assigned Starter Kit Function=BLUE
38		GND	GND		
39	71	3V3_RTC	Power		min 2.50 V, max 3.63V
40		GND	GND		
41		GND	GND		
42	88,89	3V3	Power		
43	88,89	3V3	Power		
44	94	DEBUG_RXD	I	Debug UART	**DEBUG_RXD**
45	96	DEBUG_RTS	O	Debug UART (pulled-down / FTDI controlled strapping state on Starter Kit)	**DEBUG_RTS**
46	95	DEBUG_TXD	O	Debug UART (pulled-down on module)	**DEBUG_TXD**
47	97	DEBUG_CTS	I	Debug UART	**DEBUG_CTS**
48	98	SWD_DIO	I/O	CM4F SWD	**SWD_DIO**
49	99	SWD_CLK	I	CM4F SWD	**SWD_CLK**
50	100	SWO	O	CM4F SWD	**SWO**
51	125	SYSRST_N	I		**SYSRST_N**
52	127	SERVICE_TXD	O	Service UART	**SERVICE_TXD**
53	129	SERVICE_RXD	I	Service UART	**SERVICE_RXD**
54	128	SERVICE_RTS	O	Service UART	**SERVICE_RTS**
55	130	SERVICE_CTS	I	Service UART	**SERVICE_CTS**
56	134	RECOVERY_RXD	I	Recovery UART	**RECOVERY_RXD**
57	135	RECOVERY_TXD	O	Recovery UART (PU on module)	**RECOVERY_TXD**
58	136	RECOVERY_RTS	O	Recovery UART (pulled-down on module)	**RECOVERY_RTS**
59	137	RECOVERY_CTS	I	Recovery UART	**RECOVERY_CTS**
60	139	IO0_GPIO86/IO0_TXD	O	IO0_GPIO / IO0_TXD (pulled-down on module)	**IO0_TXD**
61	143	IO1_GPIO90/IO1_TXD	O	IO1_GPIO / IO1_TXD (pulled-down on module)	**IO1_TXD**
62 - 66		GND	GND	GND pour	
67		PADGND	GND	Thermal pad for MT3620	

Electrical Specifications

Note! The electrical characteristics documented here are for the MT3620AN SoC device only, as defined in the MT3620AN Datasheet and Product Brief documents

Absolute Maximum Ratings

Symbol	Parameter	Max	Unit
3V3	3.3V Supply Voltage	-0.3 to 3.63	V
T_{STG}	Storage Temperature	-40 to +125	°C
V_{ESD}	ESD protection (human body model)	2000	V

Recommended Operating Conditions

Symbol	Rating	Min	Typ	Max	Unit
3V3	3.3V supply	2.97	3.3	3.63	V
3V3_RTC	RTC supply	2.5	3.3	3.63	V
$T_{AMBIENT}$	Ambient Temperature	-35	-	+85	°C

DC Characteristics

Symbol	Parameter	Conditions	Min	Max	Unit
V_{IL}	Input Low Voltage	LVTTL	-0.28	0.8	V
V_{IH}	Input High Voltage		2.0	3.63	V
V_{OL}	Output Low Voltage	|IOL| = 4 to 16 mA	-0.28	0.4	V
V_{OH}	Output High Voltage	|IOH| = 4 to 16 mA	2.4	VDD33+0.33	V
R_{PU}	Input Pull-Up Resistance	PU=high, PD=low	40	190	kΩ
R_{PD}	Input Pull-Down Resistance	PU=low, PD=high	40	190	kΩ

Current Consumption

Power mode	Description	Details		Typical current consumption	Hardware wake-up latency
		Subsystem	Power State		
RTC mode	Only RTC domain is on. Memory is not retained. Requires a cold boot to resume	Pluton CM4 subsystem	Off	0.01mA or 0.02mA ***(*1)***	24ms (crystal and PLL lock, PMU time
		CA7 subsystem	Off		
		CM4F I/O subsystems	Off		
		Wi-Fi subsystem	Off		
		Buses/peripherals	Off		
Worst case power consumption no Wi-Fi	All subsystems apart from Wi-Fi running at full speed	Pluton CM4 subsystem	On	220mA Worst case 380mA ***(*2)***	N/A, 650us WiFi subsystem resume latency
		CA7 subsystem	On		
		IO 0/1 CM4 subsystems	On		
		Wi-Fi subsystem	Light sleep		
		Buses/peripherals ***(*3)***	On		
Worst case power consumption with Wi-Fi (*2)	All subsystems running at full speed, Wi-Fi very active	Pluton CM4 subsystem	On	520mA ***(*4)*** Worst case 750mA ***(*2)***	N/A
		CA7 subsystem	On		
		IO 0/1 CM4 subsystems	On		
		Wi-Fi subsystem	On		
		Buses/peripherals ***(*3)***	On		
		RF (A or G Band)	On		
		Flash ***(*5)***	On		

Note *1: 0.01mA/0.02mA with/without external 3.3v source PMIC control switch respectively.

Note *2: The current values are measured under typical case (TT silicon and 25C/1.15V) and the TDP (max thermal design power) includes simulation worst case condition (TT/125C/1.15V/MC99 ,MC99 is PTPX power simulation library).

Note *3: It depends on how busy the peripherals are and how they are configured.

Note *4: This data is based on 100% Wi-Fi transmission on the 5GHz band at 14dBm.

Note *5: It depends on the I/O loading and flash power consumption.

RF Characteristics

Wi-Fi 2.4GHz Band RF Receiver Specifications

The specification in table below is measured at the antenna port, which includes the front-end loss.

Parameter	Description	Performance				
		Min	Typical		Max	Unit
			Main	Aux		
Frequency range	Center channel frequency	2412			2484	MHz
RX sensitivity	DBPSF, 1 Mbps DSSS	-	-94.6	-97.1	-90.0	dBm
	DQPSF, 2 Mbps DSSS	-	-91.6	-94.1	-87.0	dBm
	DQPSF, 5.5 Mbps CCK	-	-89.6	-92.1	-85.0	dBm
	DQPSF, 11 Mbps CCK	-	-86.6	-89.1	-82.0	dBm
	BPSK rate 1/2, 6 Mbps OFDM	-	-91.6	-94.1	-87.0	dBm
	BPSK rate 3/4, 9 Mbps OFDM	-	-89.3	-91.8	-86.0	dBm
	QPSK rate 1/2, 12 Mbps OFDM	-	-88.5	-91.0	-84.0	dBm
	QPSK rate 3/4, 18 Mbps OFDM	-	-86.1	-88.6	-82.0	dBm
	16QAM rate 1/2, 24 Mbps OFDM	-	-82.8	-85.3	-81.0	dBm
	16QAM rate 3/4, 36 Mbps OFDM	-	-79.4	-81.9	-78.0	dBm
	64QAM rate 1/2, 48 Mbps OFDM	-	-75.2	-77.7	-73.0	dBm
	64QAM rate 3/4, 54 Mbps OFDM	-	-73.9	-76.4	-71.0	dBm
RX sensitivity BW=20MHz, Mixed mode 800ns guard interval, Non-STBC	MCS 0, BPSK rate 1/2	-	-90.9	-93.4	-87.0	dBm
Maximum Receive Level	MCS 1, QPSK rate 1/2	-	-87.7	-90.2	-86.0	dBm
	MCS 2, QPSK rate 3/4	-	-85.3	-87.8	-84.0	dBm
	MCS 3, 16QAM rate 1/2	-	-82.3	-84.8	-81.0	dBm
	MCS 4, 16QAM rate 3/4	-	-78.8	-81.3	-77.0	dBm
	MCS 5, 64QAM rate 2/3	-	-74.4	-76.9	-74.0	dBm
	MCS 6, 64QAM rate 3/4	-	-73.0	-75.5	-71.0	dBm
	MCS 7, 64QAM rate 5/6	-	-71.8	-74.3	-69.0	dBm
	1 Mbps DSSS	-20	-10		-	dBm
	11 Mbps CCK	-20	-10		-	dBm
	6 Mbps OFDM	-20	-10		-	dBm
	54 Mbps OFDM	-20	-10		-	dBm
	HT20 MCS0	-20	-10		-	dBm
	HT20 MCS7	-20	-20		-	dBm

Wi-Fi 2.4GHz Band RF Receiver Specifications (continued)

Parameter	Description	Performance				
		Min	Typical		Max	Unit
			Main	Aux		
Receive adjacent channel rejection	BPSK rate 1/2, 6 Mbps OFDM	16	34		-	dBm
	BPSK rate 3/4, 9 Mbps OFDM	15	31		-	dBm
	QPSK rate 1/2, 12 Mbps OFDM	13	30		-	dBm
	QPSK rate 3/4, 18 Mbps OFDM	11	27		-	dBm
	16QAM rate 1/2, 24 Mbps OFDM	8	25		-	dBm
	16QAM rate 3/4, 36 Mbps OFDM	4	23		-	dBm
	64QAM rate 1/2, 48 Mbps OFDM	0	22		-	dBm
	64QAM rate 3/4, 54 Mbps OFDM	-1	22		-	dBm
	MCS 0, BPSK rate 1/2	16	33		-	dBm
	MCS 1, QPSK rate 1/2	13	29		-	dBm
	MCS 2, QPSK rate 3/4	11	26		-	dBm
	MCS 3, 16QAM rate 1/2	8	24		-	dBm
	MCS 4, 16QAM rate 3/4	4	20		-	dBm
	MCS 5, 64QAM rate 2/3	0	18		-	dBm
	MCS 6, 64QAM rate 3/4	-1	17		-	dBm
	MCS 7, 64QAM rate 5/6	-2	15		-	dBm
Receiver residual PER	All rates, -50dBm input power	-	-		0.005	%

Wi-Fi 2.4GHz Band RF Transmitter Specifications

The specification in table below is measured at the antenna port, which includes the front-end loss.

Parameter	Description	Performance			
		Min	Typical	Max	Unit
Frequency range	Center channel frequency	2412	-	2484	MHz
Output power with spectral mask and EVM compliance	1 Mbps DSSS	- x	16(1)	-	dBm
	11 Mbps CCK	-	16(1)	-	dBm
	6 Mbps OFDM	-	16(1)	-	dBm
	54 Mbps OFDM	-	16(1)	-	dBm
	HT20 MCS 0	-	16(1)	-	dBm
	HT20 MCS 7	-	16(1)	-	dBm
Output power with spectral mask and EVM compliance (at -40◦C and 85◦C)	1 Mbps DSSS	-	15(1)	-	dBm
	11 Mbps CCK	-	15(1)	-	dBm
	6 Mbps OFDM	-	15(1)	-	dBm
	54 Mbps OFDM	-	15(1)	-	dBm
	HT20 MCS 0	-	15(1)	-	dBm
	HT20 MCS 7	-	15(1)	-	dBm
TX EVM	1 Mbps DSSS	-	-	-10	dB
	11 Mbps CCK	-	-	-10	dB
	6 Mbps OFDM	-	-	-5	dB
	54 Mbps OFDM	-	-	-25	dB
	HT20 MCS 0	-	-	-5	dB
	HT20 MCS 7	-	-	-28	dB
Output power variation(2)	TSSI closed-loop control across all temperature range and channels and VSWR ≦ 1.5:1.	-1.5	-	1.5	dB
Carrier suppression	-	-	-	-30	dBc
Harmonic output power	2nd Harmonic	-	-45	-43	dBm/MHz
	3rd Harmonic	-	-45	-43	dBm/MHz

Note 1: Low power PA.
Note 2: VDD33 voltage is within ±5% of typical value.

Wi-Fi 5GHz Band RF Receiver Specifications

Specifications in the table below are measured at the antenna port, which includes the front-end loss.

Parameter	Description	Performance				
		Min	Typical		Max	Unit
			Main	Aux		
Frequency range	Center channel frequency	5180	-		5825	MHz
RX sensitivity	BPSK rate 1/2, 6 Mbps OFDM	-	-90.0	-91.5	-86.0	dBm
	BPSK rate 3/4, 9 Mbps OFDM	-	-87.7	-89.2	-85.0	dBm
	QPSK rate 1/2, 12 Mbps OFDM	-	-87.0	-88.5	-83.0	dBm
	QPSK rate 3/4, 18 Mbps OFDM	-	-84.5	-86.0	-81.0	dBm
	16QAM rate 1/2, 24 Mbps OFDM	-	-81.3	-82.8	-75.0	dBm
	16QAM rate 3/4, 36 Mbps OFDM	-	-78.0	-79.5	-72.0	dBm
	64QAM rate 1/2, 48 Mbps OFDM	-	-73.6	-75.1	-70.0	dBm
	64QAM rate 3/4, 54 Mbps OFDM	-	-72.2	-73.7	-68.0	dBm
RX sensitivity BW=20MHz HT Mixed mode 800ns guard interval non-STBC	MCS 0, BPSK rate 1/2	-	-89.3	-90.8	-86.0	dBm
	MCS 1, QPSK rate 1/2	-	-86.3	-87.8	-84.0	dBm
	MCS 2, QPSK rate 3/4	-	-83.8	-85.3	-82.0	dBm
	MCS 3, 16QAM rate 1/2	-	-80.8	-82.3	-76.0	dBm
	MCS 4, 16QAM rate 3/4	-	-77.3	-78.8	-74.0	dBm
	MCS 5, 64QAM rate 2/3	-	-72.8	-74.3	-72.0	dBm
	MCS 6, 64QAM rate 3/4	-	-71.4	-72.9	-70.0	dBm
	MCS 7, 64QAM rate 5/6	-	-70.2	-71.7	-66.0	dBm
Maximum receive level	6 Mbps OFDM	-30	-10		-	dBm
	54 Mbps OFDM	-30	-20		-	dBm
	MCS0	-30	-15		-	dBm
	MCS7	-30	-20		-	dBm
Receive adjacent channel rejection	BPSK rate 1/2, 6 Mbps OFDM	16	24		-	dBm
	BPSK rate 3/4, 9 Mbps OFDM	15	23		-	dBm
	QPSK rate 1/2, 12 Mbps OFDM	13	21		-	dBm
	QPSK rate 3/4, 18 Mbps OFDM	11	19		-	dBm
	16QAM rate 1/2, 24 Mbps OFDM	8	15		-	dBm
	16QAM rate 3/4, 36 Mbps OFDM	4	10		-	dBm
	64QAM rate 1/2, 48 Mbps OFDM	0	5		-	dBm
	64QAM rate 3/4, 54 Mbps OFDM	-1	3		-	dBm
	MCS 0, BPSK rate 1/2	16	24		-	dBm
	MCS 1, QPSK rate 1/2	13	21		-	dBm
	MCS 2, QPSK rate 3/4	11	19		-	dBm
	MCS 3, 16QAM rate 1/2	8	16		-	dBm

Wi-Fi 5GHz Band RF Receiver Specifications (continued)

Parameter	Description	Performance				
		Min	Typical		Max	Unit
			Main	Aux		
	MCS 4, 16QAM rate 3/4	4	12		-	dBm
	MCS 5, 64QAM rate 2/3	0	7		-	dBm
	MCS 6, 64QAM rate 3/4	-1	5		-	dBm
Receiver residual PER	MCS 7, 64QAM rate 5/6	-2	3		-	dBm

Wi-Fi 5GHz Band RF Transmitter Specifications

The specification in table below is measured at the antenna port, which includes the front-end loss.

Parameter	Description	Performance			
		Min	Typical	Max	Unit
Frequency range	Center channel frequency	5180	-	5825	MHz
Output power with spectral mask and EVM compliance	6 Mbps OFDM	-	14(1)	-	dBm
	54 Mbps OFDM	-	14(1)	-	dBm
	HT20 MCS 0	-	14(1)	-	dBm
	HT20 MCS 7	-	14(1)	-	dBm
Output power with spectral mask and EVM compliance (at -40◦C and 85◦C)	6 Mbps OFDM	-	13(1)	-	dBm
	54 Mbps OFDM	-	13(1)	-	dBm
	HT20 MCS 0	-	13(1)	-	dBm
	HT20 MCS 7	-	13(1)	-	dBm
TX EVM	6 Mbps OFDM	-	-	-5	dB
	54 Mbps OFDM	-	-	-25	dB
	HT20 MCS 0	-	-	-5	dB
	HT20 MCS 7	-	-	-28	dB
Output power variation(2)	TSSI closed-loop control across all temperature range and channels and VSWR ≦ 1.5:1.	-1.5	-	1.5	dB
Carrier suppression		-	-	-30	dB
Harmonic output power	2nd Harmonic	-	-45	-43	dBm/MHz
	3rd Harmonic	-	-45	-43	dBm/MHz

Note 1: Low power PA
Note2: VDD33 voltage is within ±5% of typical value.

Wi-Fi RF Receiver Blocking Specifications

The specifications in table below are measured at the antenna port, which includes the front-end loss.

Parameter	Description	Performance			
		Min	Typical	Max	Unit
Receiver in-band blocking(1) CW and BT interferers	2.4 GHz CW and BT interfering signal @ ±20MHz offset	-47	-	-	dBm
	2.4 GHz CW and BT interfering signal @ ±25MHz offset	-40	-	-	dBm
	5 GHz CW interfering signal @ ±20MHz offset	-35	-	-	dBm
Receiver out-band blocking(1) CW interferer	25 ≤ f < 2300 MHz	-28	-	-	dBm
	2300 ≤ f < 2395 MHz	-40	-	-	dBm
	2483.5 < f ≤ 2583.5 MHz	-45	-	-	dBm
Receiver out-band blocking(1) CDMA, GSM, DCS and PCS interferers(2)	CDMA UL: 824 – 849 MHz	-20	-	-	dBm
	CDMA DL: 869 – 894 MHz	-10	-	-	dBm
	GSM UL: 880 – 915 MHz	-10	-	-	dBm
	GSM DL: 925 – 960 MHz	-10	-	-	dBm
	DCS UL: 1710 – 1785 MHz	-13	-	-	dBm
	DCS DL: 1805 – 1880 MHz	-20	-	-	dBm
	PCS UL: 1850 – 1910 MHz	-20	-	-	dBm
	PCS DL: 1930 – 1990 MHz	-20	-	-	dBm
Receiver out-band blocking(1) WiFi interferers	5G receiver only, interfering signal: 2400 < f ≤ 2483.5 MHz	-20	-	-	dBm
	2G receiver only, interfering signal: 5125 < f ≤ 5850 MHz	-20	-	-	dBm

Note 1: The desired signal's strength is 3 dB above the Maximum RX sensitivity. **PER ≤ 10%.**
Note 2: Except harmonic mixing.

Mechanical Specifications

Module Dimension Details

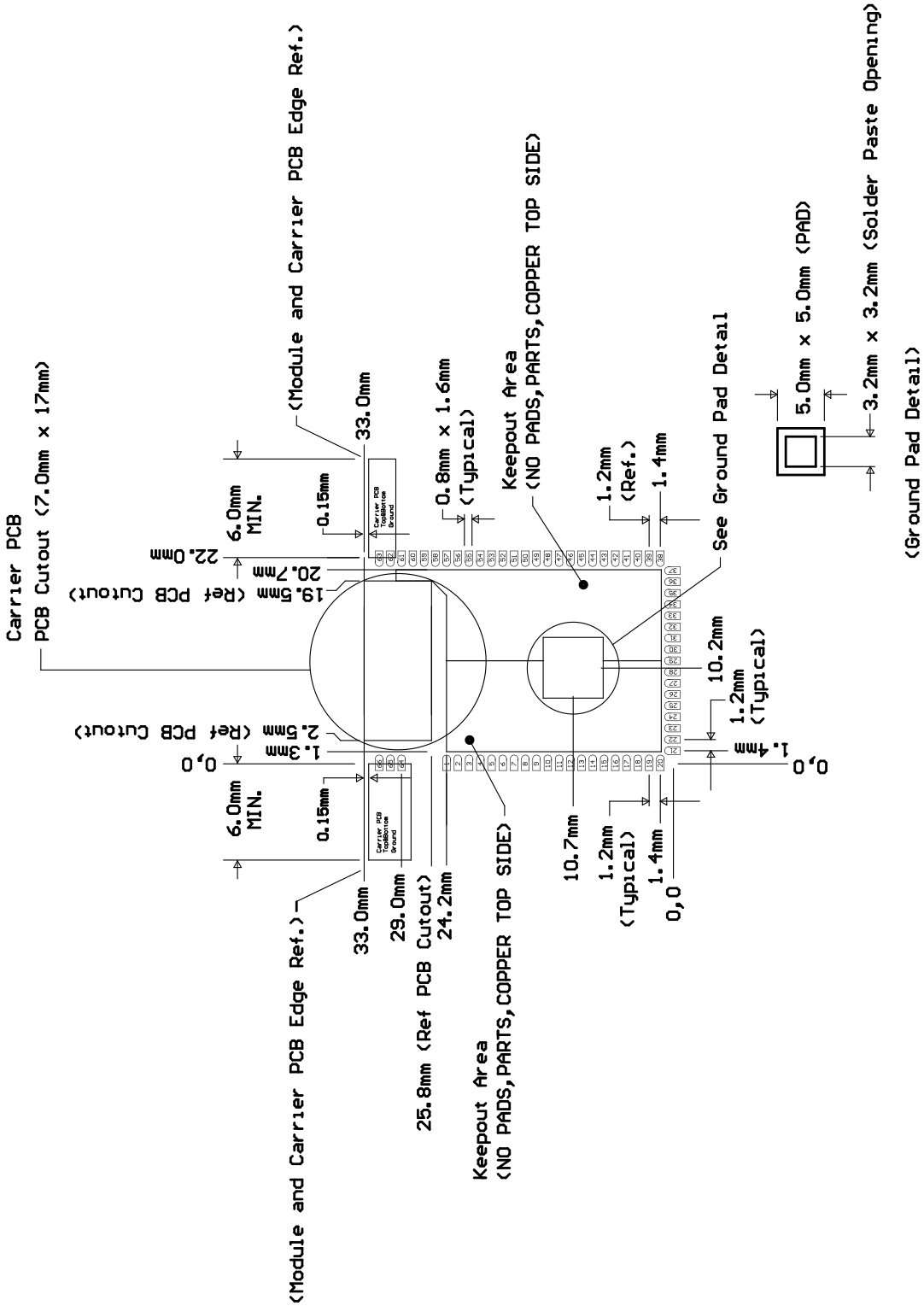

Figure 6 – AES-MS-MT3620-M-G-3 Module Mechanical Details

Tape and Reel Packaging

AES-MS-MT3620-3 Azure Sphere Modules are available in tape and reel packaging at quantities of 300 units. The reel dimensions are 13 inches (reel diameter) x 56 mm (tape-width).
The 56 mm tape-width conforms to the Electronic Components Association Standard EIA-481-D.

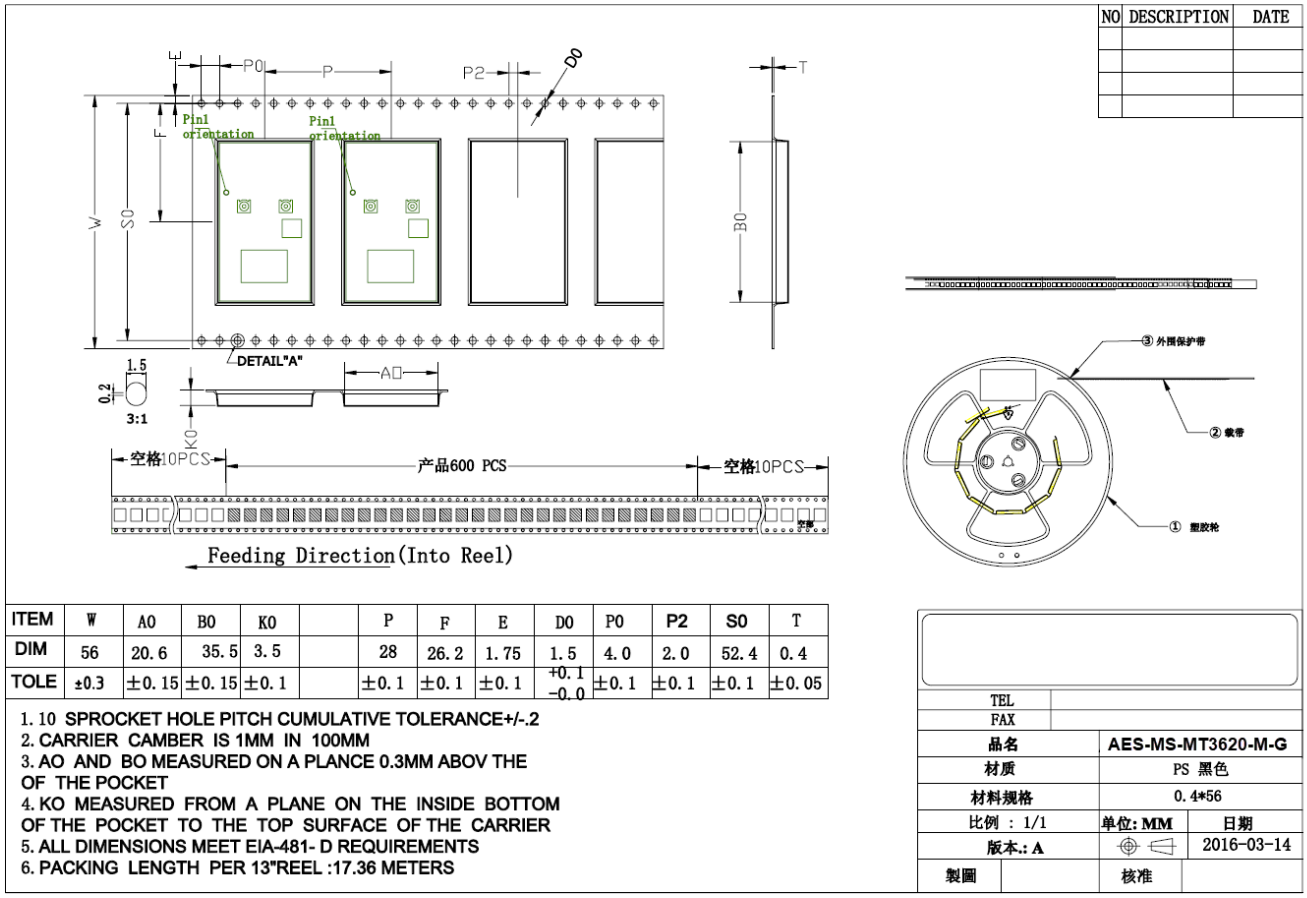

ITEM	W	A0	B0	K0		P	F	E	D0	P0	P2	S0	T
DIM	56	20.6	35.5	3.5		28	26.2	1.75	1.5	4.0	2.0	52.4	0.4
TOLE	±0.3	±0.15	±0.15	±0.1		±0.1	±0.1	±0.1	+0.1 −0.0	±0.1	±0.1	±0.1	±0.05

1. 10 SPROCKET HOLE PITCH CUMULATIVE TOLERANCE+/-.2
2. CARRIER CAMBER IS 1MM IN 100MM
3. AO AND BO MEASURED ON A PLANCE 0.3MM ABOV THE OF THE POCKET
4. KO MEASURED FROM A PLANE ON THE INSIDE BOTTOM OF THE POCKET TO THE TOP SURFACE OF THE CARRIER
5. ALL DIMENSIONS MEET EIA-481- D REQUIREMENTS
6. PACKING LENGTH PER 13"REEL :17.36 METERS

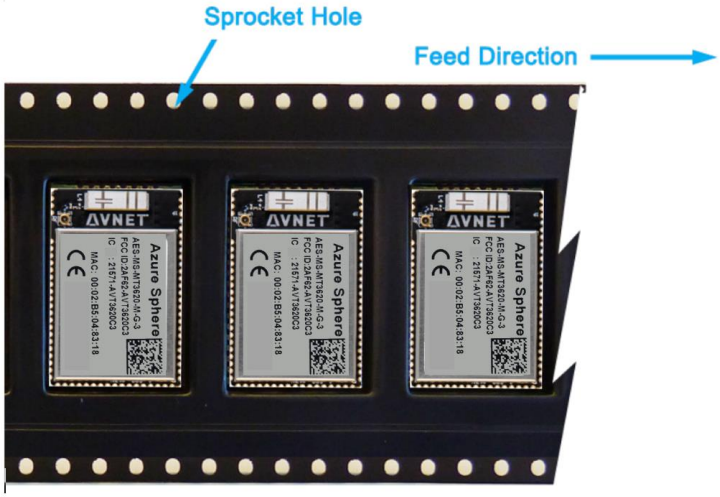

Figure 7 – Tape and Reel Details

Soldering and Cleaning Recommendations

[Preliminary – This information is likely to change]

Optimum Soldering Reflow Profile

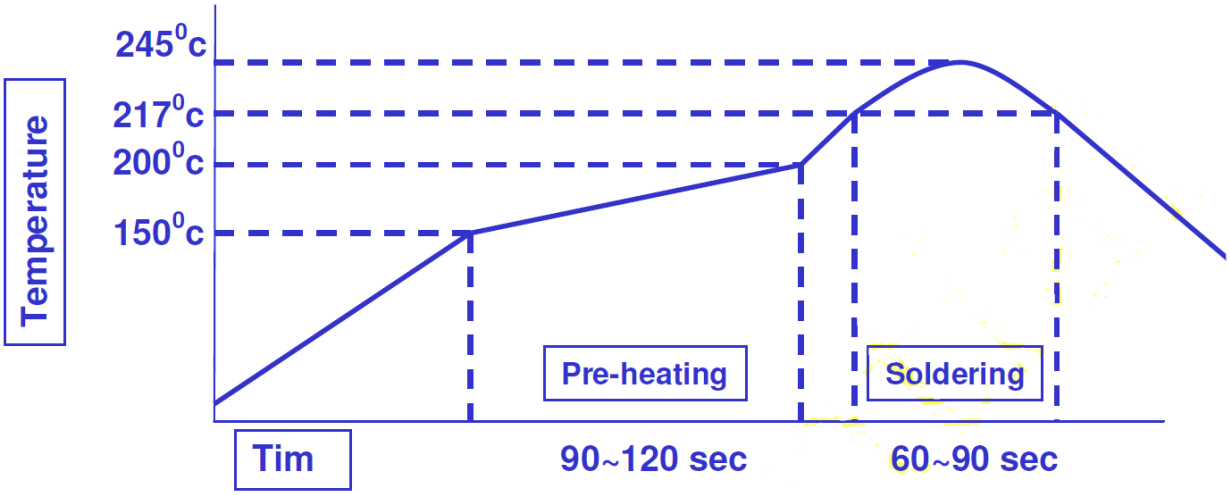

Figure 8 – Recommended Soldering Profile for Lead-Free Solder

- Solder joint quality between the AES-MS-MT3620 Azure Sphere Module's surface mount pads and their bonding with the host board should meet the appropriate IPC Specification.
  (See *IPC-A-610-D Acceptability of Electronic Assemblies*, section 8.2.1 "*Bottom Only Terminations*")
- It is recommended that only a single reflow soldering process be permitted for the host board
- Any attempts at reworking the module will invalidate warrantee coverage and regulatory certifications

Cleaning

- Cleaning of the populated module is not recommended!
- Residuals under the module cannot be easily removed by any cleaning process
  (Water / Solvents / Ultrasonic)

Certifications and Compliance

RoHS Compliance

AES-MS-MT3620 Azure Sphere Modules are lead-free and RoHS compliant.

Regulatory Compliance

Tabled below is the status of the regional certifications

AES-MS-MT3620 Azure Sphere Module certification applies to operation in various regulatory domains. This section outlines certification information specific to the following countries and regions:

Region	Regulatory Body	Certification ID / *(Status Comment)*
United States	FCC	2AF62-AVT3620C-3 2AF62-AVT3620U-3 *(UFL version certification pending)*
Canada	ISED (IC)	21571-AVT3620C-3 21571-AVT3620U-3 *(UFL version certification pending)*
Europe	CE	*(Completed - see table on page 31)*
Japan	MIC	pending
Australia, NZ	ACMA SRD	pending
India	WPC	pending
Taiwan	NCC	pending
South Korea	KC/RRA	pending
All	RoHS	Compliant

Should regulatory certification be required in a specific country or region not already covered, please contact your local Avnet sales office, or create a support request at http://avnet.me/mt3620-forums

FCC and ISED Regulatory Notices (USA and Canada)

Modification statement

Avnet has not approved any changes or modifications to this device by the user.
Any changes or modifications could void the user's authority to operate the equipment!

Interference statement

This device complies with Part 15 of the FCC Rules and Industry Canada's license-exempt RSS standards. Operation is subject to the following two conditions: (1) this device may not cause interference, and (2) this device must accept any interference, including interference that may cause undesired operation of the device.

RF Radiation Exposure Statement

This equipment complies with FCC and ISED radiation exposure limits set forth for an uncontrolled environment. The antenna should be installed and operated with minimum distance of 20 cm between the radiator and your body. This transmitter must not be co-located or operating in conjunction with any other antenna or transmitter.

FCC Class B Digital Device Notice (USA)

This equipment has been tested and found to comply with the limits for a Class B digital device, pursuant to Part 15 of the FCC Rules. These limits are designed to provide reasonable protection against harmful interference in a residential installation. This equipment generates, uses and can radiate radio frequency energy and, if not installed and used in accordance with the instructions, may cause harmful interference to radio communications. However, there is no guarantee that interference will not occur in a particular installation. If this equipment does cause harmful interference to radio or television reception, which can be determined by turning the equipment off and on, the user is encouraged to try to correct the interference by one of the following measures:

- Reorient or relocate the receiving antenna.
- Increase the separation between the equipment and receiver.
- Connect the equipment into an outlet on a circuit different from that to which the receiver is connected.
- Consult the dealer or an experienced radio/TV technician for help.

FCC Module Statement (USA)

The single-modular transmitter is a self-contained, physically delineated, component for which compliance can be demonstrated independent of the host operating conditions, and which complies with all eight requirements of § 15.212(a)(1) as summarized below.

1) The radio elements have the radio frequency circuitry shielded.
2) The module has buffered modulation/data inputs to ensure that the device will comply with Part 15 requirements with any type of input signal.
3) The module contains power supply regulation on the module.
4) The module contains a permanently attached antenna.
5) The module demonstrates compliance in a stand-alone configuration.
6) The module is labelled with its permanently affixed FCC ID label
7) The module complies with all specific rules applicable to the transmitter, including all the conditions provided in the integration instructions by the grantee.
8) The module complies with RF exposure requirements.

CAN ICES-003 (B)

This Class B digital apparatus complies with Canadian standard ICES-003.

Labeling Requirements for the OEM Host Board

The host device shall be properly labelled to identify the modules within the host device. The certification label of the module shall be clearly visible at all times when installed in the host device, otherwise the host device must be labelled to display the FCC ID and IC of the module, preceded by the words "Contains transmitter module", or the word "Contains", or similar wording expressing the same meaning, as follows:

Contains FCC ID: 2AF62-AVT3620C-3
Contains IC: 21571-AVT3620C-3

This device complies with Part 15 of the FCC Rules.
Operation is subject to the following two conditions:
(1) This device may not cause harmful interference, and
(2) This device must accept any interference received, including interference that may cause undesired operation.

FCC Requirements for User Manual of the OEM Host Board:

The OEM integrator may not provide any information to the end user on how to install or remove this RF module or change RF related parameters in the user manual of the end product.

The following statement must be included as a CAUTION statement in manuals for the OEM products, to alert users of FCC RF exposure compliance:

“WARNING: To satisfy FCC RF exposure requirements for mobile transmitting devices, a separation distance of 20cm or more should be maintained between the antenna of this device and persons during operation. To ensure compliance, operations at closer distances than this are not recommended”

The user manual for the final end product should include the following statement:

This device complies with Part 15 of the FCC Rules.
Operation is subject to the following two conditions:
(1) This device may not cause harmful interference, and
(2) This device must accept any interference received, including interference that may cause undesired operation.

This equipment has been tested and found to comply with the limits for a Class B digital device, pursuant to Part 15 of the FCC Rules. These limits are designed to provide reasonable protection against harmful interference in a residential installation. This equipment generates, uses and can radiate radio frequency energy and, if not installed and used in accordance with the instructions, may cause harmful interference to radio communications. However, there is no guarantee that interference will not occur in a particular installation. If this equipment does cause harmful interference to radio or television reception, which can be determined by turning the equipment off and on, the user is encouraged to try to correct the interference by one of the following measures:

- Reorient or relocate the receiving antenna.
- Increase the separation between the equipment and receiver.
- Connect the equipment into an outlet on a circuit different from that to which the receiver is connected.
- Consult the dealer or an experienced radio/TV technician for help.

IC Requirements for User Manual of the OEM Host Board:

The user manual for the final end product shall display the following Industry Canada notices in a conspicuous location:

Industry Canada Statements

This Device complies with Industry Canada License-exempt RSS standard(s). Operation is subject to the following two conditions: (1) this device may not cause interference, and (2) this device must accept any interference, including interference that may cause undesired operation of the device.

Le présent appareil est conforme aux CNR d'Industrie Canada applicables aux appareils radio exempts de licence. L'exploitation est autorisée aux deux onditions suivantes: (1) l'appareil ne doit pas produire de brouillage, et (2) l'utilisateur de l'appa-reil doit accepter tout brouillage radioélectrique subi, meme si le brouillage est susceptible d'en com-promettre le fonctionnement.

Additional requirements for the band 5600-5650 MHz

Until further notice, devices subject to this Section shall not be capable of transmitting in the band 5600-5650 MHz, so that Environment Canada weather radars operating in this band are protected.

Prescriptions supplémentaires pour la bande 5600-5650 MHz

Jusqu’à nouvel ordre, les appareils faisant l’objet de la présente section ne doivent pas transmettre dans la bande 5600-5650 MHz, afin que les radars météorologiques d’Environnement Canada fonctionnant dans cette bande soient protégés

To comply with ISED RF exposure requirements, this device must be installed to provide at least 20 cm of separation from the human body at all times.

Afin de se conformer aux exigences d'exposition RF ISED, cet appareil doit être installé pour fournir au moins 20 cm de séparation du corps humain en tout temps.

FCC Host 15B and 15C Compliance Statement (USA)

The OEM integrator is responsible for testing their end-product for any additional compliance requirements needed with this module installed (e.g. digital device emissions, PC peripheral requirements, etc). Additionally, investigative measurements and spot checking are strongly recommended to verify that full system compliance is maintained when the module is integrated, in accordance with the "Host Product Testing Guidance" in FCC's KDB 996369 D04 Module Integration Guide V01

CE Statement (Europe)

Avnet AES-MS-MT3620 Azure Sphere Modules have been tested and certified for use in the European Union.

Summary of European Compliance Tests:

Certification	Standard	Test Lab
Safety	IEC 62368-1:2014 (Second Edition)	Nemko USA Inc. Carlsbad CA, USA
EMF	EN 62311:2008 EN 62479:2010	Nemko USA Inc. Carlsbad CA, USA
EMC	EN 301 489-1 V2.2.3 EN 301 489-17 V3.2.2 EN 300 440 V2.2.1	Nemko USA Inc. Carlsbad CA, USA
Radio	EN 300 328 V2.1.1	Nemko USA Inc. Carlsbad CA, USA

When integrating this module into an end product, the OEM has responsibility to verify compliance of the final product to the EU standards.

A Declaration of Conformity (DOC) must be issued and kept on file as described in Annex II of the Radio and Telecommunications Terminal Equipment (R&TTE) Directive.

CE Labeling Requirements (Europe)

The ‘CE’ mark must be placed on the OEM product per the labelling requirements of the R&TTE Directive.

OEM Instructions

This module is certified for installation into OEM end-products under the following conditions:

1) The intended use of this AES-MS-MT3620-M-G-3 module is for **indoor locations**. If the end product using this module is able to operate in the band 5150-5250 MHz within Canada, it is **only** allowed to be used indoors (to reduce potential harmful interference to co-channel mobile satellite systems)
   The label of the end product in this case **must** include the text “**For indoor use only**”

2) It’s intended use is as a **Wi-Fi client** only (not a Wi-Fi access point or used in point-to-point mode)

3) The AES-MS-MT3620-M-G-3 module is for (OEM) installation only.

The requirement for software security of UNII devices, is fully met by Microsoft Azure Sphere's advanced security. Software updates require certificate-based authentication using hardware-based root of trust.

Shipping, Handling and Storage

Shipping

Bulk orders of Avnet AES-MS-MT3620 Azure Sphere Modules are delivered in reels of 300.
(See detail under the section on Tape & Reel Packaging)

Handling

AES-MS-MT3620 Azure Sphere Modules contain sensitive electronic circuitry that require proper ESD protection when handling. Failure to follow these ESD procedures may result in permanent damage to the module.

The module should not be subjected to excessive mechanical shock.

Moisture Sensitivity (MSL)

Modules that have been exposed to moisture and environmental conditions exceeding the prescribed packaging and storage conditions detailed in J-STD-020 (e.g. not continuously in a sealed bag with a desiccant pack) MUST be baked before mounting! (Failure to meet the packaging and storage conditions described, will result in irreparable damage to modules during solder reflow soldering).

For devices that are packaged in a Moisture Barrier Bag with a desiccant pack and HIC (Humidity Indicator Card), the HIC card should be referenced and J-STD-033 consulted to determine if baking is required prior to reflow soldering.

In cases where baking is required, refer to J-STD-033 for details of the bake procedure.

“Broken reel” module quantities (under 300 units) typically require baking before reflow soldering

Storage

Per J-STD-033, the shelf life of devices in a Moisture Barrier Bag is 12 months at <40ºC and <90% room humidity (RH).

Do not store in salty air or an environment where there is a high concentration of corrosive gas, such as Cl2, H2S, NH3, SO2, or NOX.

Do not store in direct sunlight.

Contact Information

For further details, contact your local Avnet representative or e-mail us at:

Region	Organization	Email	Address & Phone
North America	Avnet Americas	eval.kits@avnet.com	AVNET - Americas 2211 South 47th Street Phoenix, AZ 85034 USA Phone: 1-800-585-1602
Europe	Avnet Silica	microsoft@silica.com	Avnet Silica Gruber Str. 60c 85586 Poing, Germany Phone: +49-8121-77702

Legal Information

The module and any supporting documentation is subject to the Avnet Terms and Conditions of Sale, which can be viewed at https://www.avnet.com/wps/portal/us/about-avnet/terms-and-conditions-of-sale/azure-sphere-chip-antenna/ (“Terms and Conditions”). By using the module or any documentation, you accept the Terms and Conditions.

Appendix-A: Programming Adaptor Footprint

A key aspect of the operation of the MT3620 device are the Over-the-Air (OTA) updates of the Azure Sphere OS firmware and the application software. There are however specific use cases where wired device interfaces are needed (see table below). It is therefore recommended that a 10-pin connector footprint be added to the OEM host board to interface with the module signals tabled below:

#	Use Case	MT3620 Interface
1	Wi-Fi network settings are missing or incorrectly configured	SERVICE UART
2	A7 DEBUG UART access is required	DEBUG UART
3	M4 IO0 and IO1 TXD output are needed (eg. for debug of M4 code)	M4F IO0 and IO1 TXD pins
4	Specific firmware must be loaded.	RECOVERY UART

Notes:

1) There is currently a need to facilitate the configuration of the Wi-Fi network settings via the SERVICE UART interface (the need for this will be reduced when Microsoft at later date adds support for configuration of Wi-Fi settings via Wi-Fi A/P mode).

2) Once Wi-Fi has been configured, the Sphere OS can be “recovered” to latest version OTA via Wi-Fi.

3) Access to the DEBUG UART output (of the A7 core) provides valued log-file status information that can prove useful during software development debugging.

4) Access to the M4 TXD outputs can likewise provide status information to the software developer.

5) Local firmware files are needed to utilize the RECOVERY interface to load specific operating system versions. Otherwise, the RECOVERY interface can only load the newest available OS version hosted on Microsoft’s Azure Sphere servers, which is already performed automatically via OTA updates to the module.

The Azure Sphere CLI tool included with the development SDK from Microsoft is available to facilitate using these interfaces via software. To support these interfaces via hardware, an FTDI-based USB to serial adaptor based on the Microsoft-supplied example design is soon to be available for purchase from Avnet, with 2x5 0.1” pitch and 2x10 0.05” pitch header connectors available for interfacing to a board containing the Azure Sphere module.

Figure 9 – Sphere Programming Interface Dongle

The dongle comes with four board-interfacing headers:

Recovery:

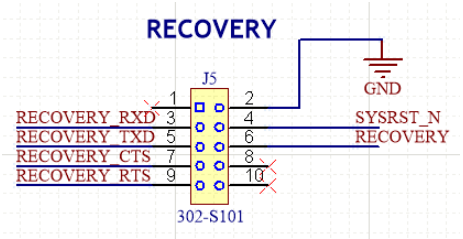

Header: 302-S101 by On Shore Technology Inc., 0.1" pitch
Recommended Cable: TC2050-IDC by Tag-Connect LLC

The Recovery header allows for operating system firmware images to be loaded onto the Azure Sphere device.

Service/Debug:

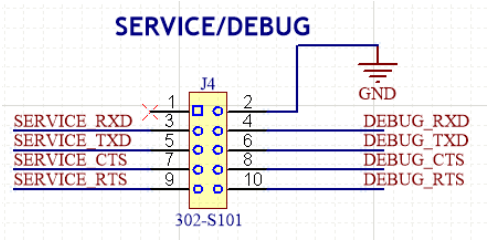

Header: 302-S101 by On Shore Technology Inc., 0.1" pitch
Recommended Cable: TC2050-IDC by Tag-Connect LLC

The Service UART allows for in-field application updates and device management such as Wi-Fi configuration and other settings specific to the A7 subsystem to be changed. The Debug UART allows for debugging user applications on the A7 subsystem via a Microsoft-supplied gdb-based mechanism in Visual Studio.

SWD:

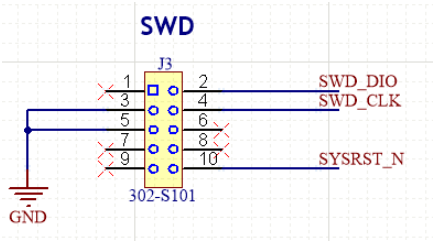

Header: 302-S101 by On Shore Technology Inc., 0.1" pitch
Recommended Cable: TC2050-IDC by Tag-Connect LLC

The SWD (Serial Wire Debug) header allows for the debugging of real-time applications on the M4 cores of the Sphere device using standard Serial Wire Debug protocol along with a Microsoft-supplied gdb-based mechanism in Visual Studio. If not developing M4 core applications, this header is optional.

Master Port:

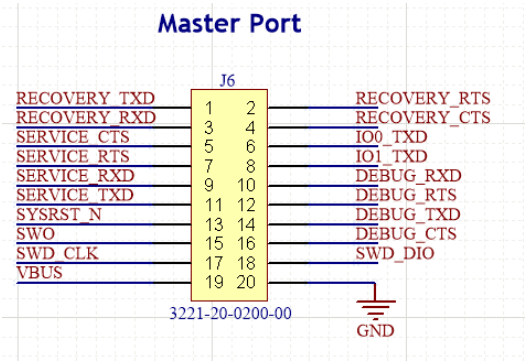

Header: 3221-20-0200-00 by CNC Tech, 0.05" pitch
Recommended Cable: FFSD-10-D-10.00-01-N-R by Samtec Inc.

The Master Port combines the Recovery, Service/Debug, and SWD signals into a single header. Additionally, the Master Port also brings the M4 core UART signals (IO0_TXD and IO1_TXD) and SWO (Serial Wire Output) signals to the dongle and are routed to the dongle's M4 Debug header for easy interfacing to a separate serial port adapter. These M4 signals are only re-routed, no USB protocol conversion is performed on them.

To gain the full functionality of each of these available header configurations, all desired signals should be routed on the target board to the Azure Sphere module.

For the 10-pin headers, board interfacing can be accomplished using a connector-less tag-connect footprint and the TC2050-IDC adapter cable available from Tag-Connect LLC, requiring minimal board space and no additional components populated onto the target board. Alternatively, a more traditional pinned header on the PCB can be used with a more traditional ribbon cable for interfacing.

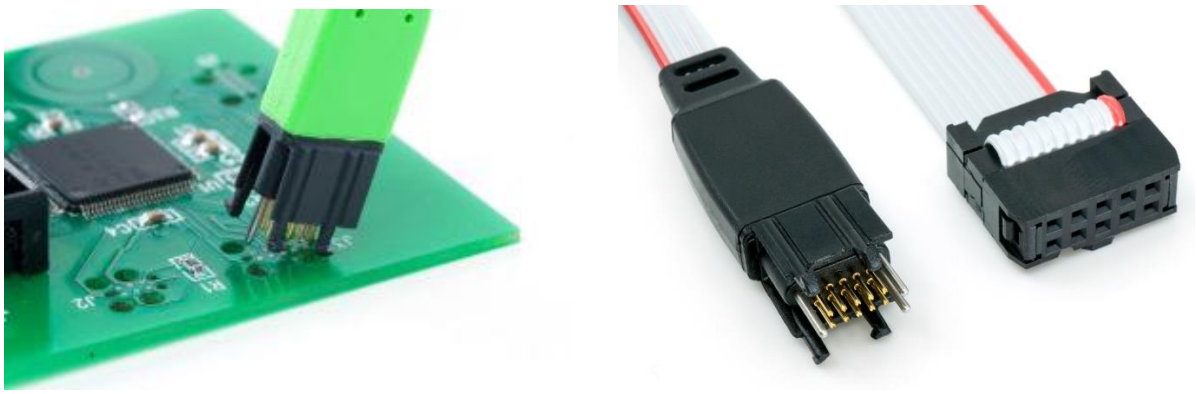

Figure 100 – Tag-Connect TC2050-IDC Cable Adapter