RAK13400 Bluetooth Module Datasheet

Overview

Description

The RAK13400 is a highly integrated Bluetooth 5 module with a UART (Universal Asynchronous Receiver/Transmitter) interface. The module is designed base on RTL8761BTV-CG from Realtek,has BT Protocol Stack ,BT Baseband,modem and BT RF in a single module. The RAK13400 provides a low power and ultra-low cost BLE solution for wireless transmission applications. It can be used in conjunction with other products from Rakwirekess like RAK7268C to achieve more applications.

Features

- Bluetooth 5 specification compliant
- Supports Bluetooth Low Energy (BLE)
- Maximum output power: TX +10dBm for BLE
- Receive sensitivity: -98 dBm(BLE Minimum)
  -106dBm (125K BLE long range Minimum)
- HS-UART interface for Bluetooth data transmission compliant H5 specification
- Support rate：2Mb/s(LE 2M),1Mb/s(LE 1M),500Kb/s(LE Coded),125Kb/s(LE Coded)
- Typica Antenna Peak Gain: 1.8 dBi (@2442MHz)
- Supply voltage :2.97 to 3.63V
- Temperature range:0 °C to +70 °C
- Module size:20mmx30mm

Specifications

Overview

Mounting

The RAK13400 Bluetooth module can be mounted to a board which have a standard Wiscore slot . Figure 1 shows the mounting mechanism of the RAK13400 on a RAK7268C .

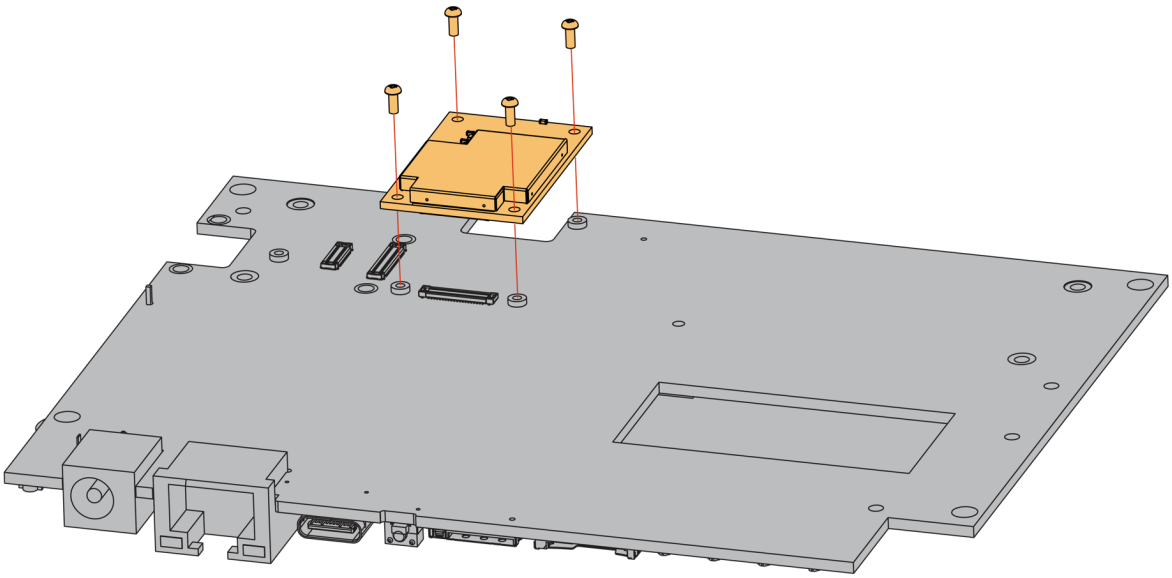

Figure 1: RAK13400 Bluetooth Module Mounting

Pin Definition

The RAK13400 Bluetooth module comprises a standard Wiscore connector. The Wiscore connector allows the RAK13400 module to mounted to a board which have a standard Wiscore slot such as RAK7268C. The pin order of the connector and the pinout definition is shown in Figure 2.

NOTE

- **UART** related pin, **RESET**,**3V3** and **GND** are connected to Wiscore connector

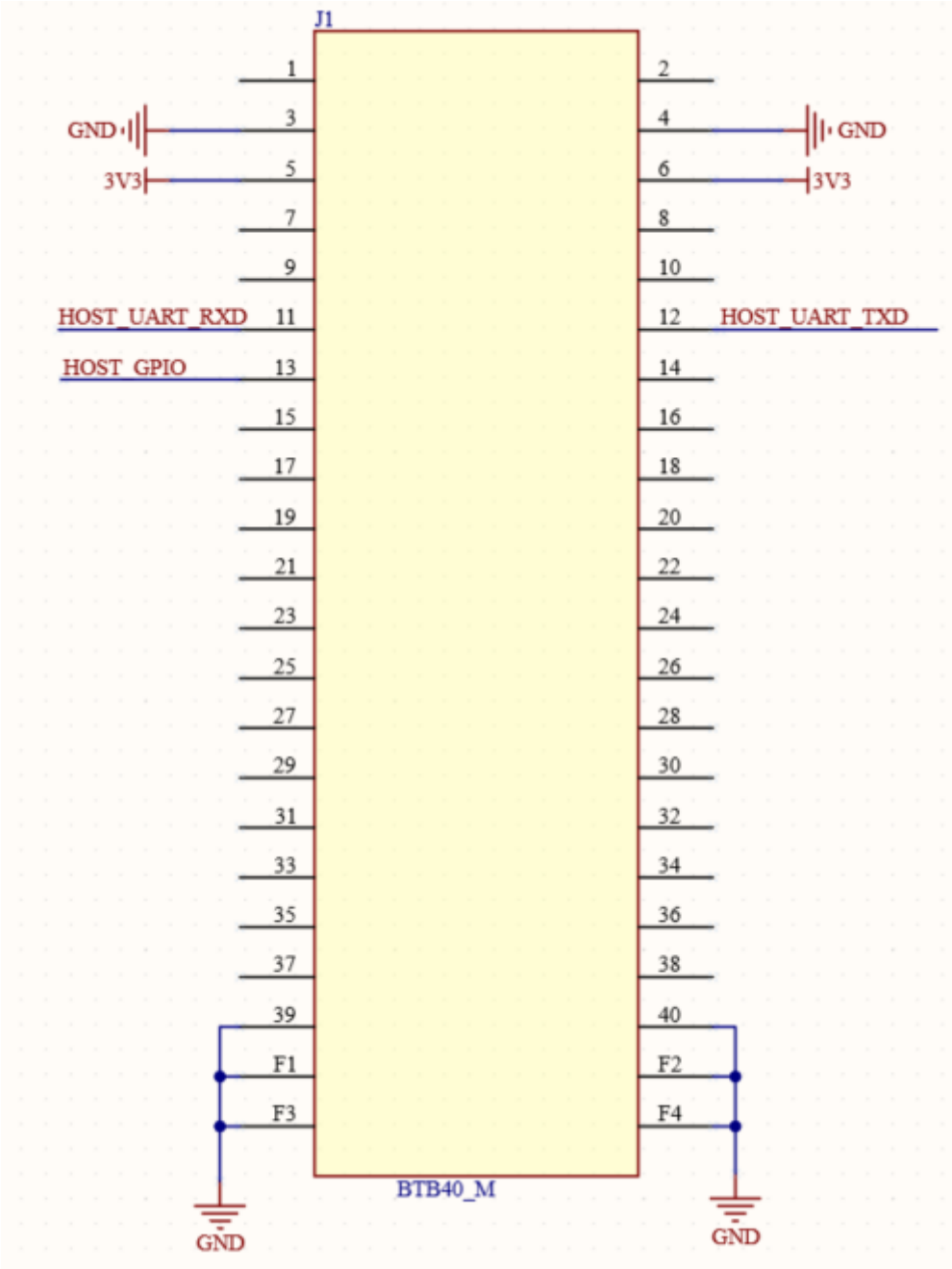

Figure 2: RAK13400 Bluetooth Module Pinout

Electrical Characteristics

Absolute Maximum Ratings

Parameter	Minimum	Maximum	Unit
Operating voltage	2.97	3.63	V
Maximum output power1	-	10 (BLE)	dBm
Receive sensitivity2	-98 (BLE)	-	dBm
Receive sensitivity3	-106dBm (125K BLE long range)	-	dBm
Temperature range	0	70	°C
Storage Temperature	18	26	°C
ESD	-	3.5 (HBM)	KV

Mechanical Characteristic

Board Dimensions

Figure 3 shows the dimensions and the mechanic drawing of the RAK13400module.

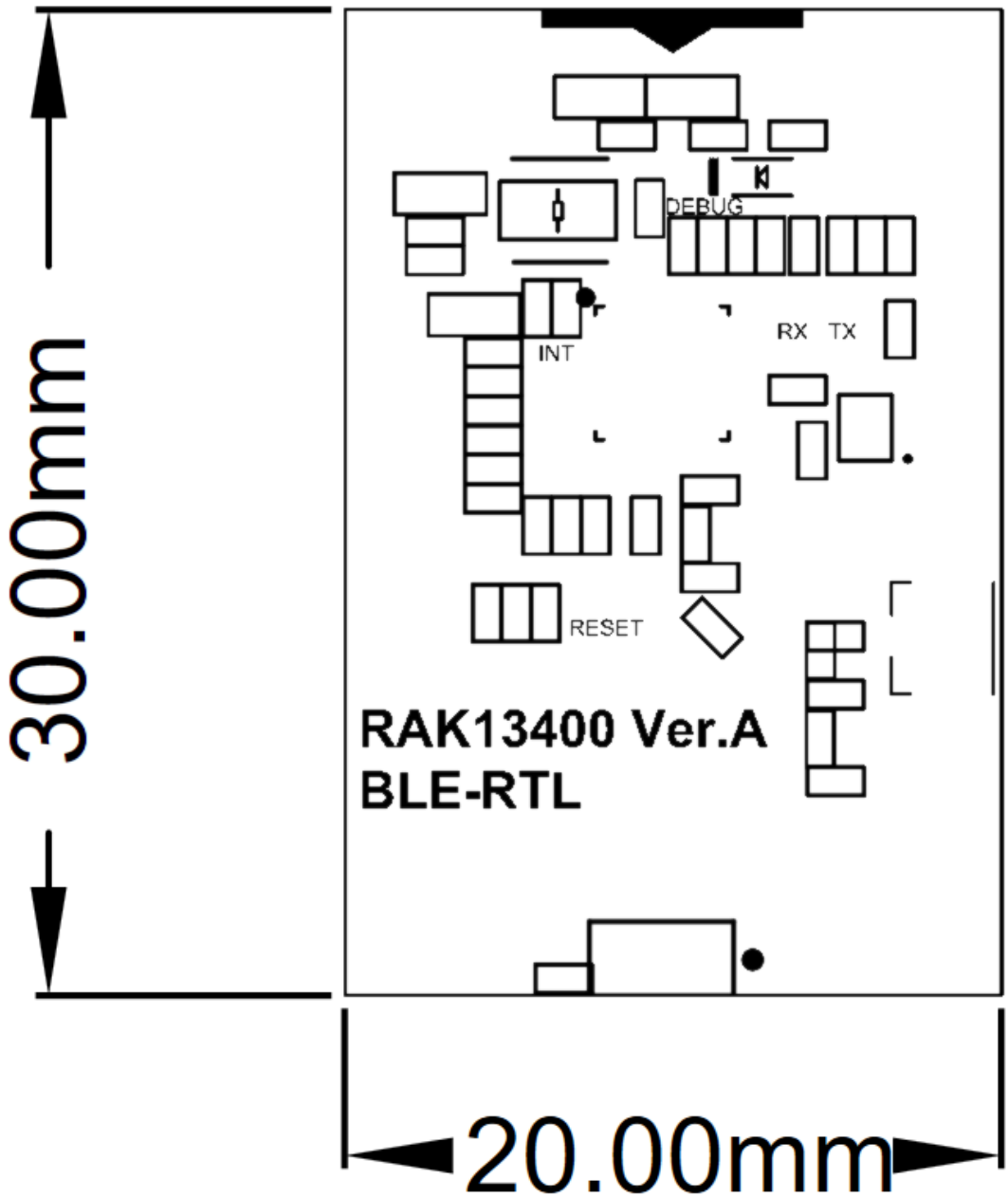

Figure 3: RAK13400r Module Mechanic Drawing

WisConnector PCB Layout

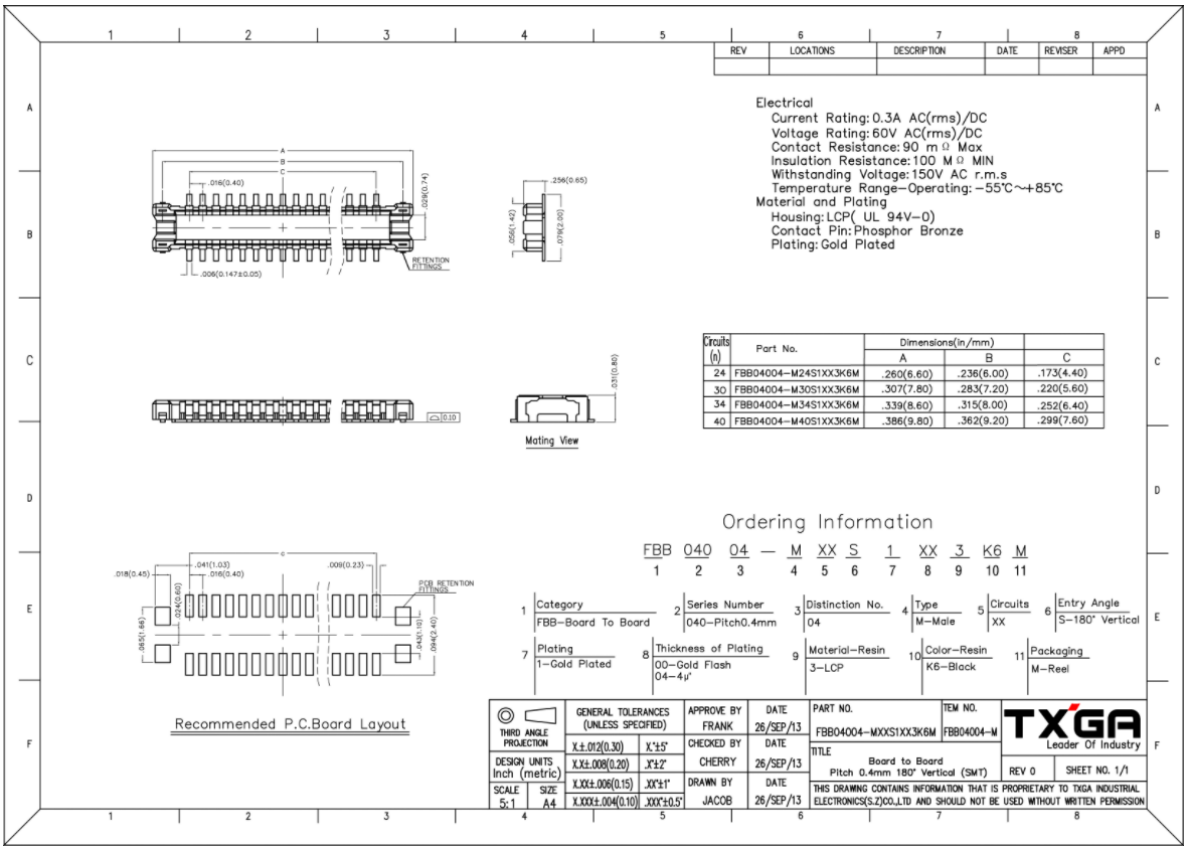

Circuits (n)	Part No.	Dimensions(in/mm) A	B	C
24	FBB04004-M24S1XX3K6M	.260(6.60)	.236(6.00)	.173(4.40)
30	FBB04004-M30S1XX3K6M	.307(7.80)	.283(7.20)	.220(5.60)
34	FBB04004-M34S1XX3K6M	.339(8.60)	.315(8.00)	.252(6.40)
40	FBB04004-M40S1XX3K6M	.386(9.80)	.362(9.20)	.299(7.60)

Figure 4: WisConnector PCB Footprint and Recommendations

Schematic

Connector

The Figure 5 shows the connector connection. **UART** related pin, **RESET**,**3V3** and **GND** are connected to the connector. Serial port hardware（CTS and RTS） control is not applicable by default.

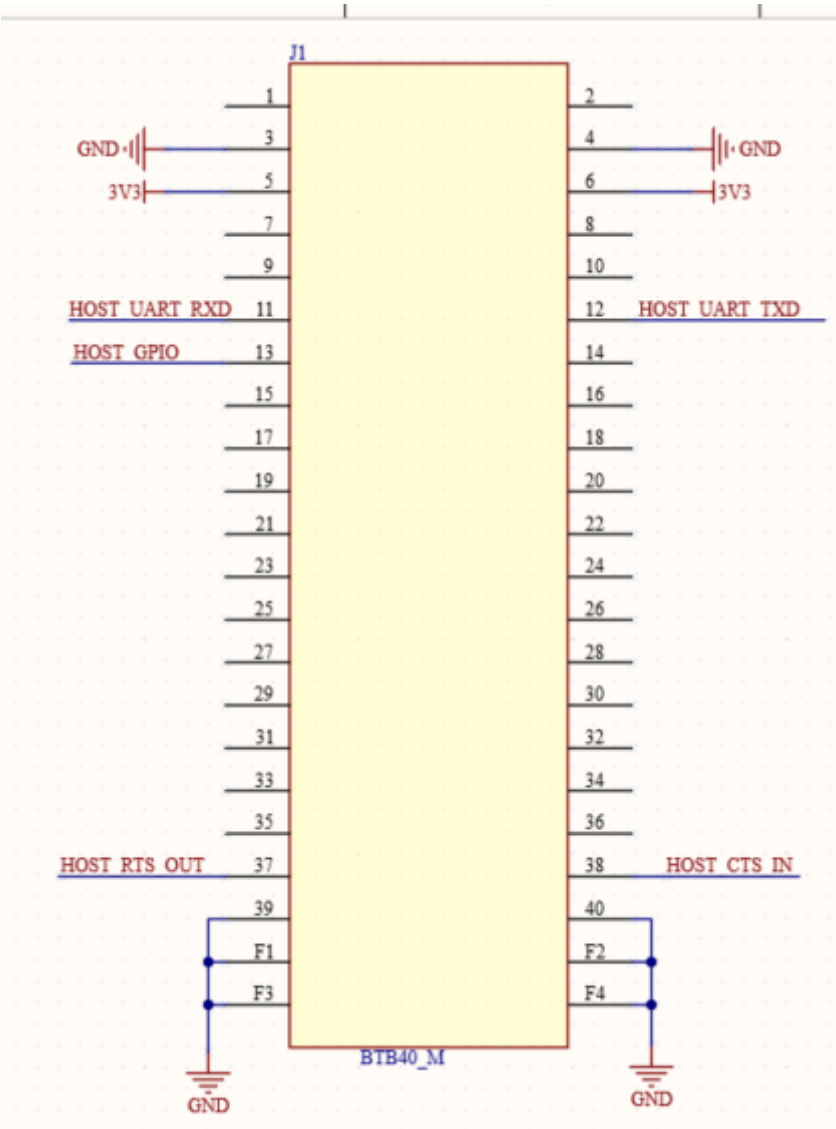

Figure 5: RAK13400 Connector Connection

Power Supply

The RAK13400 generates 1.2V using LDO inside the chip.

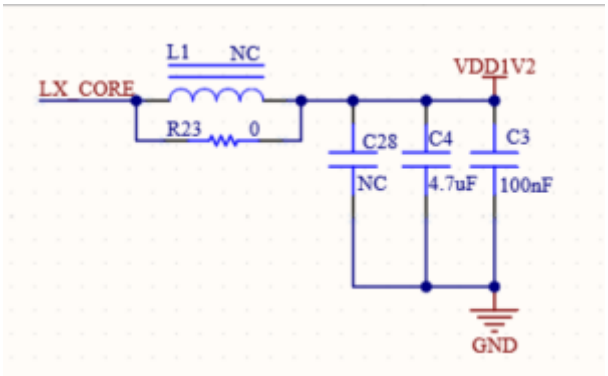

Figure 6: Power Supply

Chip Configuration

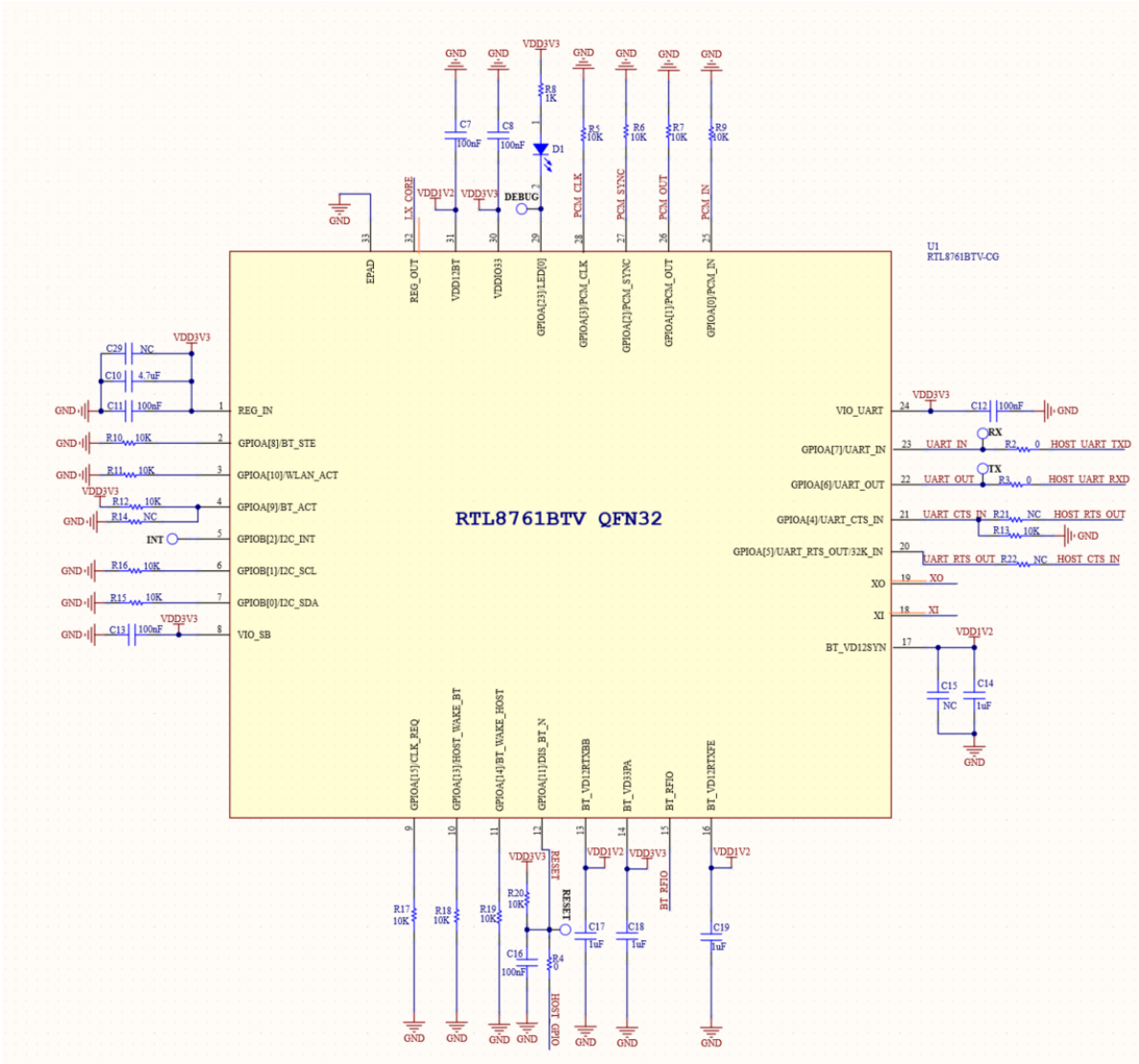

Figure 7:Chip Configurationt

Antenna matching circuit

The onboard ceramic antenna is used by default.

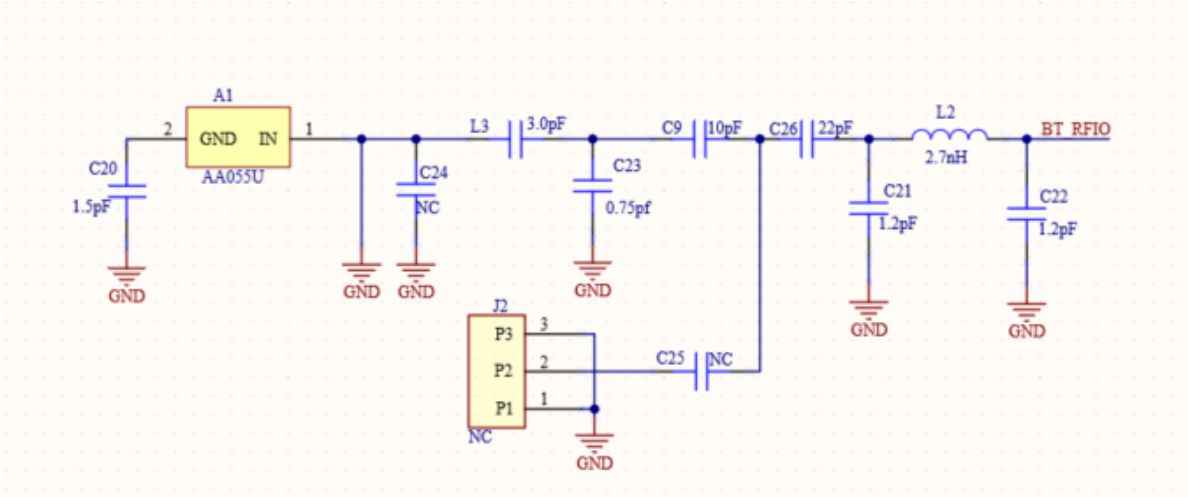

Figure 8: matching circuit

Extern Clock

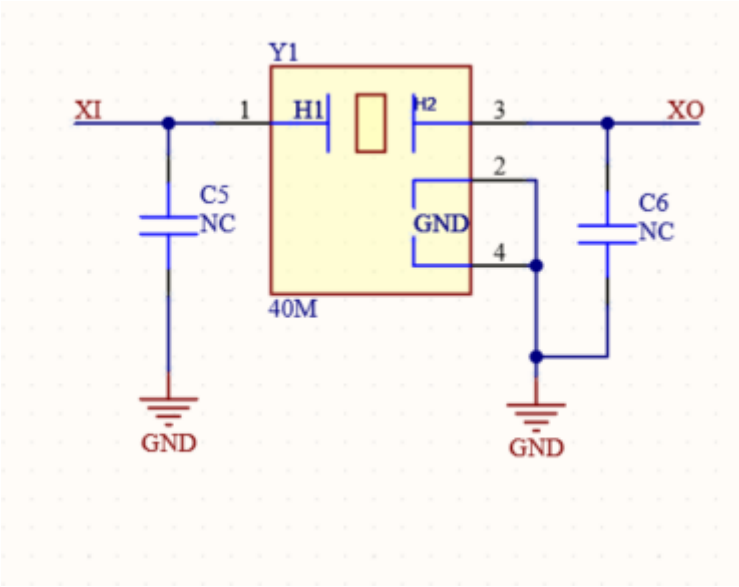

Figure9:Extern Clock

History

Date	Version	Description
2021-10-16	V1.0	Initial
2021-10-26	V1.1	Modification

Statement
This device complies with Part 15 of the FCC Rules. Operation is subject to the following two conditions: (1) this device may not cause harmful interference, and (2) this device must accept any interference received, including interference that may cause undesired operation.

FCC Caution:
Changes or modifications not expressly approved by the part responsible for compliance could void the user's authority to operate the equipment.
FCC RF Radiation Exposure Statement Caution: This Transmitter must be installed to provide a separation distance of at least 20 cm from all persons.

FCC Statement:
"This equipment has been tested and found to comply with the limits for a Class B digital device, pursuant to part 15 of the FCC Rules. These limits are designed to provide reasonable protection against harmful interference in a residential installation. This equipment generates, uses and can radiate radio frequency energy and, if not installed and used in accordance with the instructions, may cause harmful interference to radio communications. However, there is no guarantee that interference will not occur in a particular installation. If this equipment does cause harmful interference to radio or television reception, which can be determined by turning the equipment off and on, the user is encouraged to try to correct the interference by one or more of the following measures:
—Reorient or relocate the receiving antenna.
—Increase the separation between the equipment and receiver.
—Connect the equipment into an outlet on a circuit different from that to which the receiver is connected.
—Consult the dealer or an experienced radio/TV technician for help."

IC statement:
This device complies with Industry Canada licence-exempt RSS standard(s).
Operation is subject to the following two conditions: (1) this device may not cause interference, and (2) this device must accept any interference, including interference that may cause undesired operation of the device.
Le présent appareil est conforme aux CNR d'Industrie Canada applicables aux appareils radio exempts de licence. L'exploitation est autorisée aux deux conditions suivantes : (1) l'appareil ne doit pas produire de brouillage, et (2) l'utilisateur de l'appareil doit accepter tout brouillage radioélectrique subi, même si le brouillage est susceptible d'en compromettre le fonctionnement.

This equipment complies with Industry Canada radiation exposure limits set forth with a separation
Cet émetteur doit être installé pour fournir une distance de séparation d'au moins 20 cm de toute personne.

The proposed FCC IC label format is to be placed on the module. If it is not visible when the module is installed into the system, “Contains FCC ID: 2AF6B-RAK13400, Contains IC: 25908-RAK13400” shall be placed on the outside of final host system.

Labelling

— This radio transmitter [25908-RAK13400] has been approved by Innovation, Science and Economic Development Canada to operate with the antenna types listed below, with the maximum permissible gain indicated. Antenna types not included in this list that have a gain greater than the maximum gain indicated for any type listed are strictly prohibited for use with this device.
— Le présent émetteur radio [25908-RAK13400] a été approuvé par Innovation, Sciences et Développement économique Canada pour fonctionner avec les types d'antenne énumérés cidessous et ayant un gain admissible maximal. Les types d'antenne non inclus dans cette liste, et dont le gain est supérieur au gain maximal indiqué pour tout type figurant sur la liste, sont trictement interdits pour l'exploitation de l'émetteur.

Copyright© Shenzhen RAKwireless Technology Co., Ltd.