WisGate Edge Prime RAK7240CV2 Series User Manual

Product Description

The RAK7240CV2 WisGate Edge Prime is designed for large-scale LPWAN deployments where cost is essential. It supports multi-backhaul with Ethernet, Wi-Fi, and cellular connectivity and comes in 8 channel versions.

This gateway operates under WisGateOS2, which is built on the latest OpenWrt kernel. The OS web UI features a new design and supports multiple extension installations, enabling remote management using WisDM for personalized gateway customization. Its wide range of customization options allows for greater flexibility when deploying solutions.

With its features and functionalities, RAK7240V2 is suitable for any use case scenario, whether rapid deployment or customization regarding UI and functionality. In addition, the full metal enclosure's flat surface allows for brand customization and recognition, with the option to add logos onto the flat surface of the enclosure.

NOTE

The cellular option is only available on the 8-channel LoRaWAN gateway.

Product Features

Hardware

- PoE (802.3af) + Surge Protection
- Backhaul: Wi-Fi, Ethernet, and LTE (available with RAK7240CV2, 8-channel option)
- Supports 9~24 VDC and RAK Solar Battery Kit (available for gateways with DC Input interface)
- External antennas for LoRa, Wi-Fi, GPS, and LTE

Software

- WisGateOS 2
- WisGateOS2 Extensions – OpenVPN, Wireguard VPN, and others
- Remote management with WisDM Fleet Management
- Built-in Network Server (LoRaWAN support v1.0.3)
- LoRa Frame filtering (node whitelisting in Packet Forwarder mode)
- MQTT v3.1 Bridging with TLS encryption

- Buffering of LoRa frames in Packet Forwarder mode in case of NS outage (automatic data recovery)
- Fine timestamping (optional)

Product Series

MODELS	DESCRIPTION
RAK7240V2	Main model
RAK7240CV2	Sub-model, integrated cellular module

Package Inclusion

Variant with DC input interface (Power adapter and power cord for EU/UK market only)

Variant without DC Input interface (Power adapter and power cord for EU/UK market only)

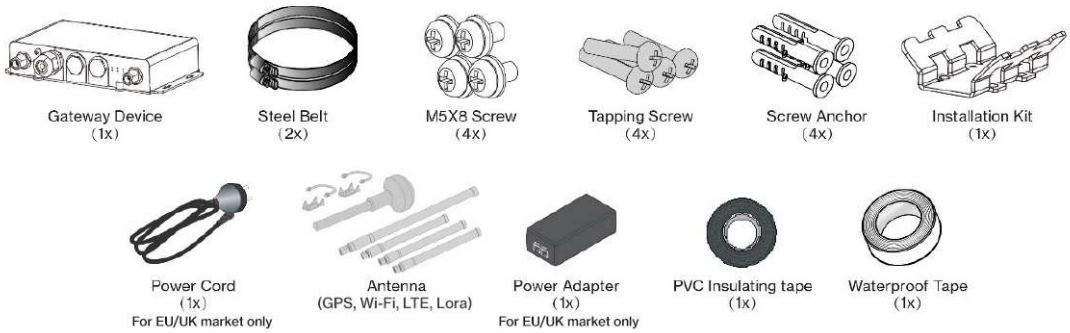

This product does not come with LoRa antenna; it needs to be purchased separately.

The antennas shown in the packing list include LTE antennas. If you purchased an 8-channel gateway without cellular connectivity, the LTE antennas are not included in the bundle.

Main Specifications

FEATURE	SPECIFICATIONS
Computing	MT7628, DDR2 RAM 128 MB
LoRa Feature	SX1303 mPCIe card (connects a maximum of two) 8-Channel RX Sensitivity: -139 dBm (Min) TX Power: 27 dBm (Max)
Frequency	EU868 / IN865 / RU864 / US915 / AU915 / KR920 / AS923-1-2-3-4 / EU433 / CN470
Cellular Feature (available with RAK7240CV2, 8-channel option)	Supports Quectel EG95-E / EG95-NA (IoT/M2M -optimized LTE Cat 4 Module) **EG95-E for Europe Region** LTE FDD: B1 / B3 / B7 / B8 /B20 / B28A WCDMA: B1 / B8 GSM: 900 / 1800 MHz **EG95-NA for North America Region** LTE FDD: B2 / B4 / B5 / B12 / B13 WCDMA: B2 / B4 / B5
Wi-Fi Feature	Frequency: 2.4 GHz (802.11b / g / n) RX Sensitivity: -95 dBm (Min) TX Power: 20 dBm (Max) Operation channels: 2.4 GHz: 1-13
Power Supply	PoE (IEEE 802.3af), 42~57 VDC

FEATURE	SPECIFICATIONS
	9~24 VDC (optional) Compatible with RAK Solar Battery Kit (optional)
Power Consumption	12 W (typical)
ETH	RJ45 (10 / 100 M)
Antenna	**LoRa**: N-Type connector **GPS**: One N-Type connector **Wi-Fi**: One N-Type connectors **LTE**: Two N-Type connectors (only for RAK7240CV2, 8-channel option)
Ingress Protection	IP65
Enclosure Material	Aluminum
Dimensions	224 x 121 x 42 mm
Weight	1.3 kg
Operating Temperature	- 30° C ~ + 55° C (Use DC connector supply only)
Operating Temperature	- 10° C ~ + 40° C (Use PoE adapter supply only)
Storage Temperature	- 40° C ~ + 85° C

FEATURE	SPECIFICATIONS
Operating Humidity	0~95%RH non-condensing
Storage Humidity	0~95 %RH non-condensing
Installation Method	Pole or wall mounting

⚠️ **IMPORTANT**

The SD card inserted in the SD card slot must not be removed, as it may affect the device's performance due to the storage of various logs and data on it.

The availability of antenna ports varies depending on the specific bundle purchased. For example, an 8-channel gateway without cellular connectivity will have sealed LTE antenna ports.

Additionally, the DC input port is exclusively available for the RAK7240V2 / RAK7240V2CV2 version with DC and Battery Plus support, and it supports a range of 9~24 VDC. It is compatible with the RAK Battery Plus, providing an additional power source for the device.

Reset Key

The functions of the Reset key are as follows:

Short press: Restart the gateway.

Long press (5s and above): Restore factory settings.

LEDs Status

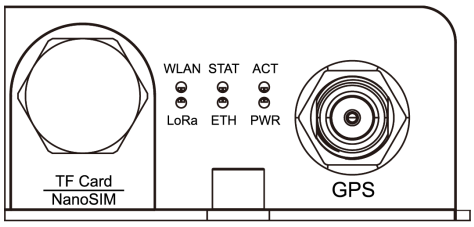

LEDs	STATUS	DESCRIPTION
PWR	On	Device power on
	Off	Device power off
ETH	On	Link up
	Off	Link down
	Flash	Data Transmitting and Receiving
LoRa1	On	LoRa1 is working
	Off	LoRa1 is not working
	Flash	Indicate that LoRa1 Packet Transmitting and Receiving
STAT ***(16-channel only)optional***	On	LoRa2 is working
	Off	LoRa2 is not working
	Flash	Indicate that LoRa2 Packet Transmitting and Receiving
WLAN (AP Mode)	On	WLAN is working
	Off	Wi-Fi disable
	Flash	Date Transmitting and Receiving
WLAN (STA Mode)	Slow Flash	(1 Hz) – Connection Disconnected
	On	Connection Successful
	Flash	Data Transmitting and Receiving

LEDs	STATUS	DESCRIPTION
ACT (LTE)	Slow Flash 1 (200ms Bright /1800ms Dark)	Unregistered network (Network searching)
	Slow Flash 2 (200ms Dark /1800ms Bright)	Idle status (Online)
	Quick Flash	Data Transmitting and Receiving

Installation

Insert SIM Card

Execute the steps below if your gateway uses a cellular network connection. Otherwise, skip this section.

⚠️ **IMPORTANT**

The SIM card slot is not hot-swappable. Make sure the gateway is switched off before inserting or ejecting the SIM card.

1. Unscrew the cap of the NanoSIM interface on the gateway enclosure to expose the SIM card slot.

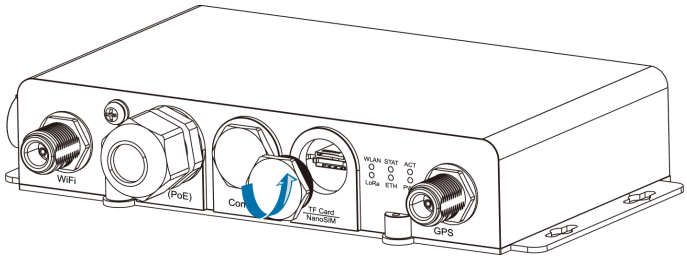

2. Push gently the SIM card into the card slot according to the placement method marked on the interface.

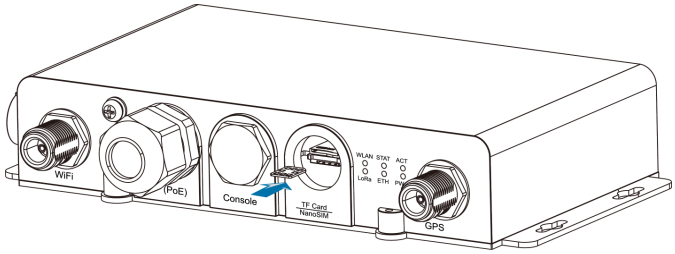

3. Once inserted, screw back the metal cap. Make sure it is tightly screwed.

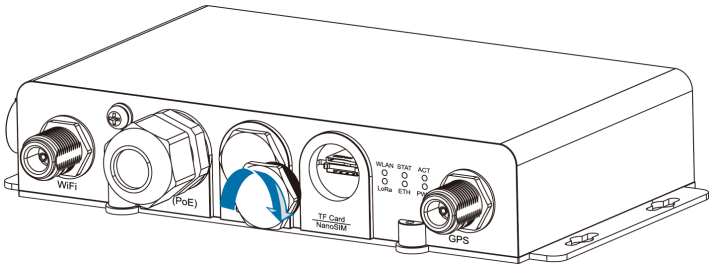

Mounting

1. Fix the installation kit at the bottom of the device with four M5*8 screws.

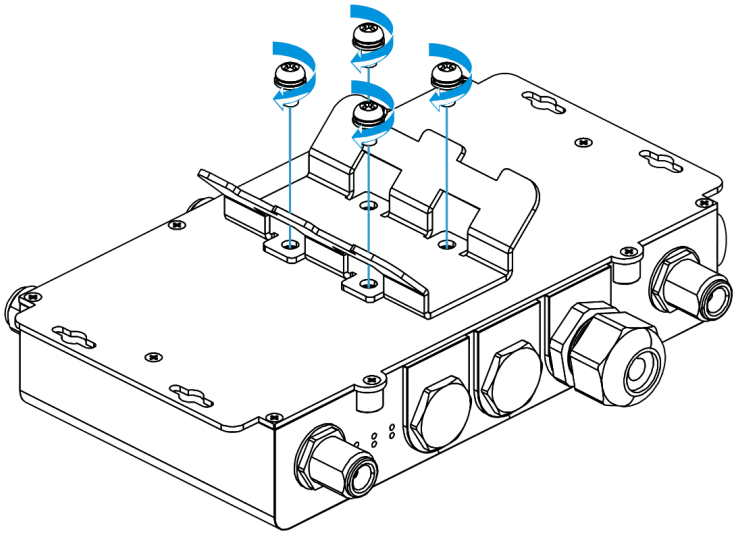

2. Slide the steel band clamps through the rectangular hole of the installation kit. Wrap the band clamps around the pole, lock them, and then tighten the clamps using a screwdriver.

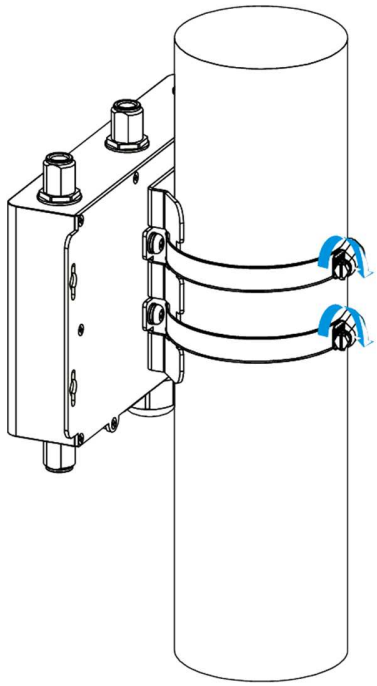

Attach the Antennas

Attach the LoRa, Wi-Fi, and GPS antennas. If you choose the cellular variant, you also need to attach the LTE antennas.

Connect the PoE Adapter

When powering the gateway using PoE or accessing the gateway and internet via ETH port, simply connect one end of an Ethernet cable (Cat5e or better) to the ETH (PoE) port on the gateway and the other end to the PoE port of the PoE injector.

Weather Protection

To better protect the Ethernet cable gland and the antenna connectors from the weather, you need to cover them with PVC tape. Follow the steps below to safeguard properly the connection and minimize the risk of damage:

1. Clean the surface area of the connector that will be wrapped. Wrap a layer of PVC tape with a 50% overlap according to the rotation direction of the connector. Continue wrapping the PVC tape to about 10 mm below the end of the connector.

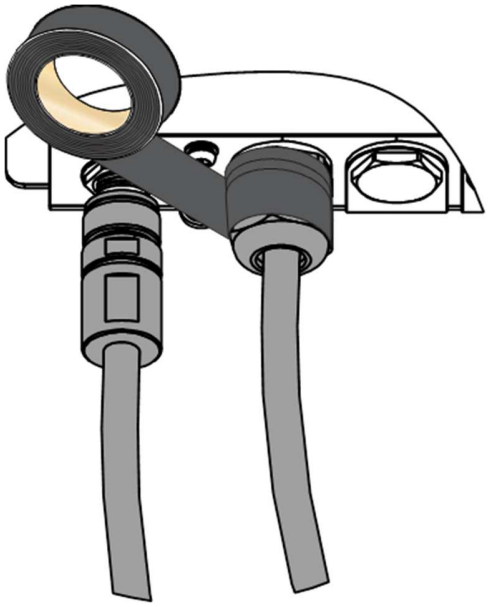

2. Cut off about 50 cm waterproof tape. Stretch it to double the length and wrap three layers around the connector with a 50% overlap. Hold the tape in place with your hand for a few seconds.

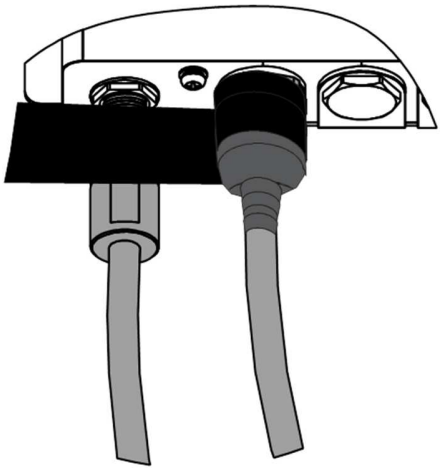

3. Wrap three additional layers with PVC tape with natural uncoiling force and a 50% overlap. Make sure to cover the head and the tail of the connector.

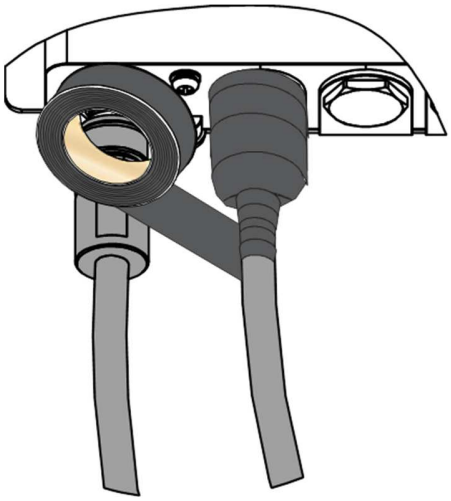

Lightning Protection

⚠️ **WARNING**

Lightning strikes can generate powerful electrical surges that may harm sensitive electronic devices. It is essential to take appropriate precautions to minimize the risk of damage. The warranty provided does not cover damages resulting from lightning strikes or other acts of nature.

To ensure optimal performance and prevent equipment damage, it is strongly advised to use proper grounding and lightning protection measures for the LoRa, GPS, Wi-Fi, and LTE antennas, power input (PoE), and gateway itself.

For more information, check the link or scan the QR code:

https://docs.rakwireless.com/Product-Categories/WisGate/ RAK7240-V2/Quickstart/# lightning-protection

• Always disconnect the system from power and telecommunications networks before cleaning or servicing.
• This product is intended to be powered by an external Limited Power Source (LPS) power supply. Use only the type which is supplied with this product.
• This system is considered to be Pluggable Equipment Type A. The socket outlets must be installed near the equipment and be easily accessible.

• Do not use a power cord that is damaged. This could cause fire or electric shock. Contact the manufacturer for a replacement cord, if necessary.
• Only use a power cord which is appropriately rated and approved relevant to the country of use.
• When connecting to the mains supply, connect only to an earthed supply outlet which is installed
near the equipment and is easily accessible.
• If the product is powered using Power over Ethernet, you must use an appropriately rated and approved networking device, or the power injector identified for use with this product.

Power On the Gateway

⚠ **WARNING**

Do not power the gateway if any antenna port has been left open. If you do not want to use one or more antenna features, terminate the port with a 50Ω load.

The sections below show how to power on your RAK7240V2 gateway.

Power Cord + PoE Adapter

The gateway is powered via PoE. Make sure to follow the instructions in the **Connect the PoE Adapter** section.

1. Connect one end of the power cord to the PoE adapter.
2. Connect the other end of power cord to the power outlet.

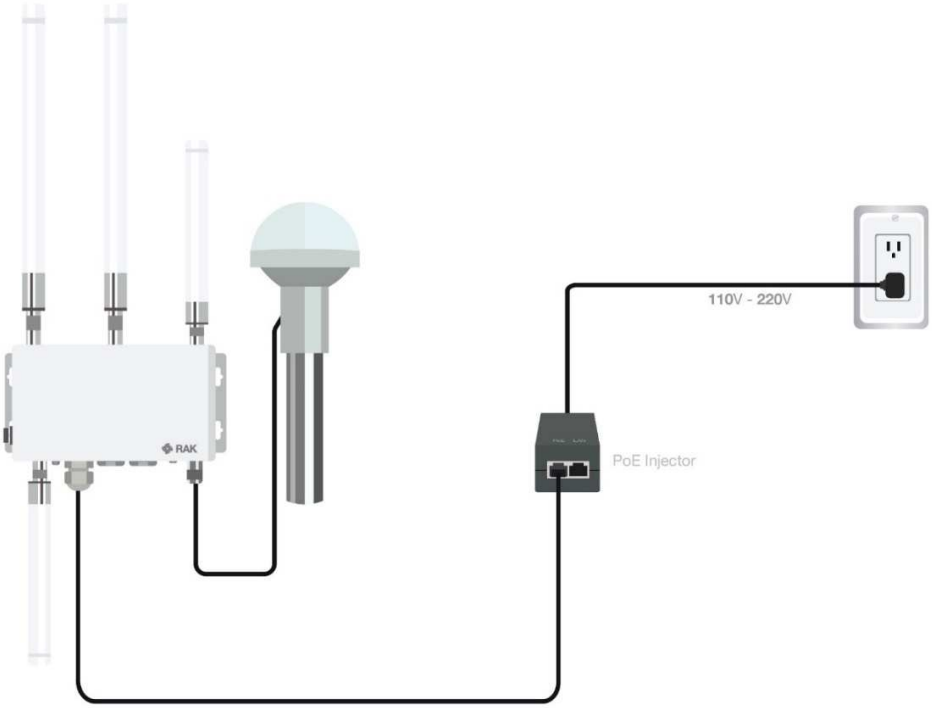

RAK Battery Plus

Powering on the RAK7240V2 with RAK Battery plus is only available for gateways with DC input interface. Using RAK Battery plus is highly recommended as the gateway's power source for outdoor deployment scenarios. There is a dedicated cable for RAK9155 Battery Plus.

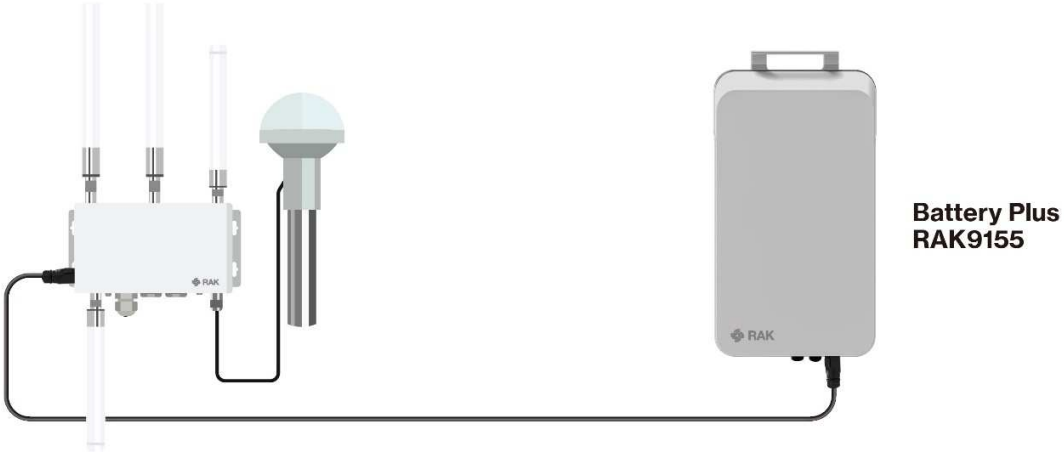

NOTE

The RAK9155 Battery Plus is not included in the bundle and must be purchased separately.

To make a purchase, refer to the store link or scan the QR code:

https://store.rakwireless.com/products/rak-battery-plus-rak9155?variant=42309251563718

Access the Gateway

Wi-Fi AP Mode

By default, the gateway operates in Wi-Fi AP mode, which means you can find an SSID, named **RAK7240V2_XXXX** or **RAK7240CV2_XXXX** on your PC's Wi-Fi network list. XXXX is the last two bytes of the gateway's MAC address.

1. Using your preferred Web browser, access the gateway on the IP address: 192.168.230.1.
2. On your first login, create a password for security purposes. The set password must comply with the following rules:

    - At least 12 characters long
    - Has at least one special character (!"#$%&\'()*+,-./:;<=>?@[]^_`{|}~)
    - Has at least one number
    - Has at least one standard Latin letter (used in the English alphabet)

3. On the next log in, you need to use the set password for access. The default login username is root.

For other ways to access the gateway, check the following link or scan the QR code:

https://docs.rakwireless.com/Product-Categories/WisGate/RAK7240-V2/Quickstart/#access-the-gateway

Access the Internet

Connect Through ETH (PoE) Port

To access the Internet through the ETH (PoE) port, make sure you have completed the steps defined in the **Connecting the PoE Adapter** section.

1. Connect the LAN port of the PoE injector to your route. The router's DHCP server should assign an IP Address to the gateway.
2. You can also use the assigned IP to access the gateway.

For other ways to access the internet, check the following link or scan the QR code:

https://docs.rakwireless.com/Product-Categories/WisGate/RAK7240-V2/Quickstart/#access-the-internet

Certification Information

Correct Disposal of this product. This marking indicates that this product should not be disposed of with other household wastes throughout the EU. To prevent possible harm to the environment or human health from uncontrolled waste disposal, recycle it responsibly to promote the sustainable reuse of material resources. To return your used device, please use the return and collection systems or contact the retailer where the product was purchased. They can take this product for environmentally safe recycling.

CE:

SIMPLIFIED EU DECLARATION OF CONFORMITY

Hereby, Shenzhen RAKwireless Technology Co.,Ltd. declares that the radio equipment type RAK7240CV2/RAK7240V2 is in compliance with Directive 2014/53/EU. The full text of the EU declaration of conformity is available at the following internet address: **********for RAK7240CV2 and ***** for RAK7240V2.

Frequency Band and Power:

The frequency bands and transmitting power (radiated and/or conducted) nominal limits applicable to this radio equipment are as follows:

Technology		Frequency band [MHz]	Maximum RF output power（dBm）
LoRa		863-865, 865-868, 868-868.6, 868.7-869.2, 869.7-870	13.97
		869.4-869.65	26.98
WLAN 802.11 b/g/n		2412-2472	20
GSM 900		880-915(TX)，925-960(RX)	33
GSM 1800		1710-1785(TX)，1805-1880(RX)	30
WCDMA Band I		1920-1980(TX)，2110-2170(RX)	24
WCDMA Band VIII		880-915(TX)，925-960(RX)	24
LTE	Band 1	1920-1980(TX)，2110-2170(RX)	23
	Band 3	1710-1785(TX)，1805-1880(RX)	23
	Band 7	2500-2570(TX)，2620-2690(RX)	23
	Band 8	880-915(TX)，925-960(RX)	23
	Band 20	832-862(TX)，791-821(RX)	23

	Band 28A	703-733(TX)，758-788(RX)	23

Manufacturer：

Shenzhen RAKwireless Technology Co.,Ltd.

Room 506, Building B, New Compark, Pingshan First Road, Taoyuan Street, Nanshan District,

Shenzhen, Guangdong, China

FCC:

This device complies with Part 15 of the FCC Rules. Operation is subject to the following two conditions: (1) this device may not cause harmful interference, and (2) this device must accept any interference received, including interference that may cause undesired operation.

FCC Caution:

Changes or modifications not expressly approved by the part responsible for compliance could void the user's authority to operate the equipment.

This equipment has been tested and found to comply with the limits for a Class B digital device, pursuant to part 15 of the FCC Rules. These limits are designed to provide reasonable protection against harmful interference in a residential installation. This equipment generates, uses and can radiate radio frequency energy and, if not installed and used in accordance with the instructions, may cause harmful interference to radio communications. However, there is no guarantee that interference will not occur in a particular installation. If this equipment does cause harmful interference to radio or television reception, which can be determined by turning the

equipment off and on, the user is encouraged to try to correct the interference by one or more of the following measures:

—Reorient or relocate the receiving antenna.
—Increase the separation between the equipment and receiver.
—Connect the equipment into an outlet on a circuit different from that to which the receiver is connected.
—Consult the dealer or an experienced radio/TV technician for help.

FCC RF Radiation Exposure Statement:
This equipment complies with FCC radiation exposure limits set forth for an uncontrolled environment. This equipment should be installed and operated with a minimum distance of 30cm between the radiator and any part of your body for RAK7240CV2， and 20cm for RAK7240V2.

ISED:

This device contains licence-exempt transmitter(s)/receiver(s) that comply with Innovation, Science and Economic Development Canada's licence-exempt RSS(s). Operation is subject to the following two conditions:

1. This device may not cause interference.
2. This device must accept any interference, including interference that may cause undesired operation of the device.

L'émetteur/récepteur exempt de licence contenu dans le présent appareil est conforme aux CNR d'Innovation, Sciences et Développement économique Canada applicables aux appareils radio exempts de licence. L'exploitation est autorisée aux deux conditions suivantes :

1. L’appareil ne doit pas produire de brouillage;
2. L’appareil doit accepter tout brouillage radioélectrique subi, même si le brouillage est susceptible d’en compromettre le fonctionnement.

This equipment complies with Innovation, Science and Economic Development Canada’s radiation exposure limits set forth for an uncontrolled environment.

Cet équipement est conforme aux limites d’exposition aux rayonnements de Développement économique Canada pour l’innovation, les sciences et le développement économique établies dans un environnement incontrôlé. "

This equipment complies with IC RSS-102 radiation exposure limits set forth for an uncontrolled environment. This equipment should be installed and operated with a minimum distance of 30cm between the radiator and any part of your body for RAK7240CV2, and 20cm for RAK7240V2.

Cet équipement est conforme aux limites d'exposition aux rayonnements IC RSS-102 définies pour un environnement non contrôlé. Cet équipement doit être installé et utilisé avec une distance minimale de 30 cm entre le radiateur et toute partie de votre corps pour le RAK7240CV2 et de 20 cm pour le RAK7240V2.