WisGate Edge Pro RAK7289 User Manual

PRODUCT NAME: WisGate Edge Pro

MODEL NAME: RAK7289

1 Product description

WisGate Edge is RAKwireless' flagship line of commercial-grade gateways. Gateways from this product line are designed to work either indoor, customizable in terms of the backhaul connectivity options, antenna type, and power provisioning.

RAK7289 WisGate Edge Pro is a LoRaWAN Gateway. It is ideal product for IoT commercial deployment. With its industrial-grade components, it achieves a high standard of reliability.

It supports up to 16 LoRa channels, multi backhaul with Ethernet, Wi-Fi. Optionally there is a dedicated port for different power options, solar panels, and batteries. With its new enclosure design, it allows the Wi-Fi, and GPS antennas to be inside the enclosure.

The gateway provides for a solid out-of-the-box experience for quick deployment. Additionally, since its software and UI sits on top of OpenWRT it is perfect for the development of custom applications (via the open SDK).

Manufacturer's address:

Shenzhen RAKwireless Technology Co., Ltd.

Room 506, Bldg B, New Compark, Pingshan First Road, Taoyuan Street, XiLi Town Nanshan District, Shenzhen, China

Instructions for use and safety information:

For safe commissioning, please read this manual and the documentation of your product. The complete documentation and further information about your product can be found in the RAKwireless Documentation Center: https://docs.rakwireless.com/Product-Categories/WisGate/#wisgate-edge. To do this, enter the product name or item number in the search box and click Search.

2 Packing List

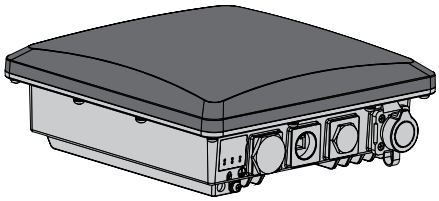

Device (1x)

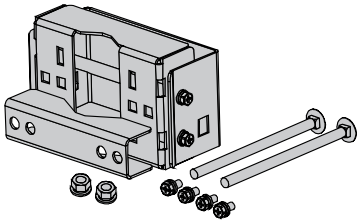

Installation Bracket (1x)

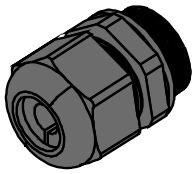

Cable Gland (1x)

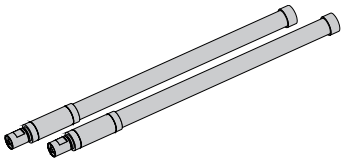

LoRa Antenna (1x or 2x)

Power Cord (1x)

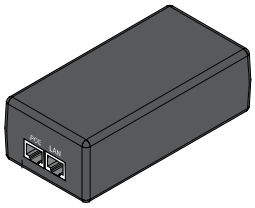

Power Adapter (1x)

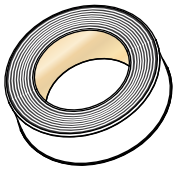

Waterproof Tape (1x)

PVC Insulating tape (1x)

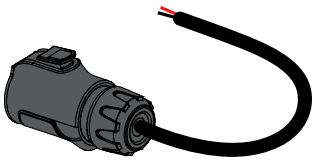

12V Cable (1x)

User Manual (1x)

3 Product specifications

Feature	Specifications
Computing	MT7628, DDR2 RAM 128 MB
Wi-Fi feature	Frequency: 2.4 GHz (802.11 b/g/b/)
	2x2 MIMO
	X Sensitivity: -95 dBm (Min)
	TX Power: 20 dBm (Max)
	Operation channels: 2.4 GHz: 1-13
LoRa feature	SX1303 mPCIe card (connects maximum of two)
	8 Channels (16 channels optional)
	RX Sensitivity: -139 dBm (Min)
	TX Power: 27 dBm (Max)
	Listen Before Talk
Frequency	EU433/CN470/EU868/US915/AS923/AU915/IN865/KR920
Power supply	PoE (IEEE 802.3 af), 37~57 VDC
ETH	RJ45 (10/100 Mbps)
Antenna	LoRa: 1 or 2 N-Type connectors
	LTE: Internal antenna
	Wi-Fi: Internal antenna
Ingress protection	IP67
Enclosure material	Aluminum and plastic
Operating temperature	-30 ˚C to +55 ˚C
Installation method	Pole or wall mounting

4 Interfaces and connectors

RAK7289's interfaces and connectors are illustrated below:

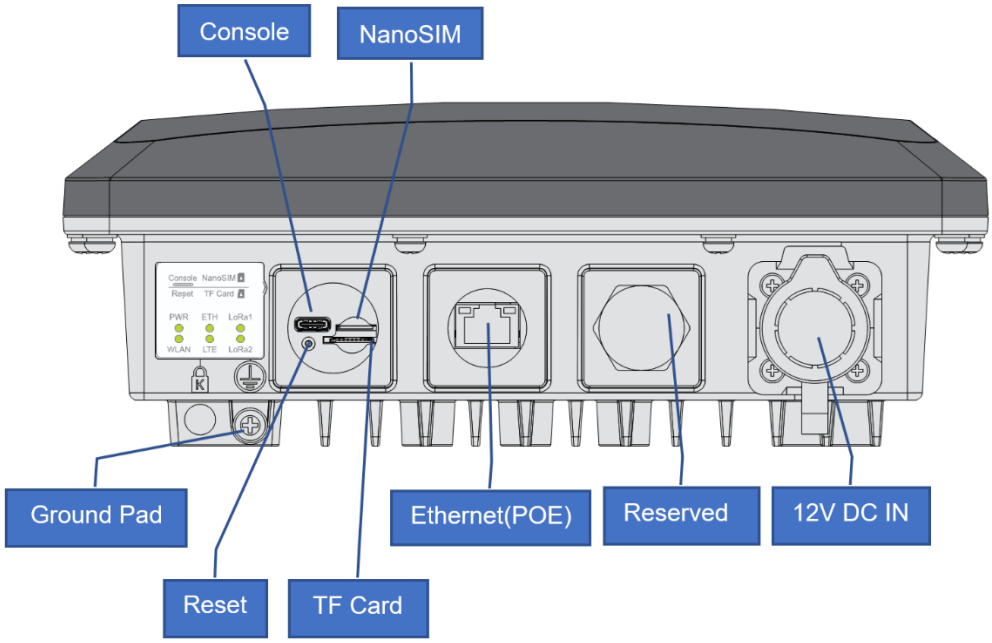

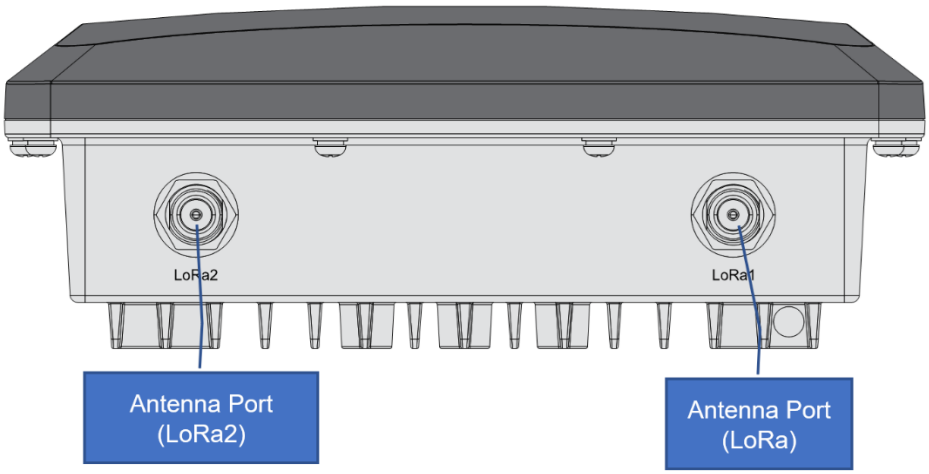

Notes:

- The SD card and the SIM card do not support hot-swap. Please always turn off the gateway before you insert or take off SIM or SD card.
- Do not power the Gateway without connected antenna/s. This may damage the radios.

5 LEDs Status

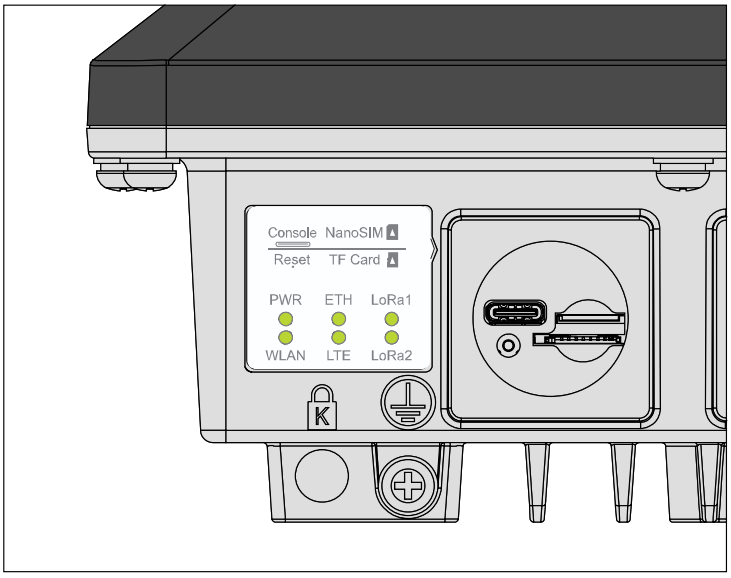

Name	Status	Description
PWR	ON/OFF	**ON** – device power on
		OFF –device power off
ETH	ON/OFF/FLASH	**ON** – link up
		OFF – link down
		Flash - data transmitting and receiving
LoRa1	ON/OFF/FLASH	**ON** - LoRa1 is working
		OFF - LoRa1 is not working
		Flash - LoRa1 packet transmitting and receiving
LoRa2	ON/OFF/FLASH	**ON** - LoRa2 is working
		OFF - LoRa2 is not working
		Flash - LoRa2 packet transmitting and receiving
WLAN	ON/OFF/Slow FLASH/FLASH	**OFF** - Wi-Fi is disabled
		AP Mode:
		- **ON** - WLAN is working
		- **Flash** - data transmitting and receiving
		STA Mode:
		- **Flash slowly (1Hz)** - connection is lost
		- **ON** - connection is successful
		- **Flash** - data transmitting and receiving

6 Installation

Instructions on mounting and securing the mounting kit to the enclosure and the bearing pole.

6.1 Mounting

Step 1. Fix the device bracket on the bottom of the enclosure with four M6*12 screws as shown below.

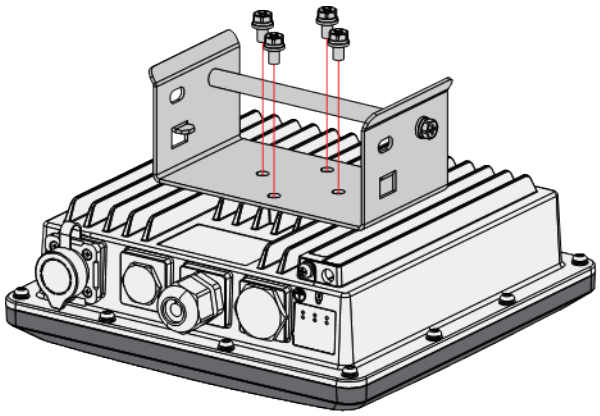

Step 2. Position and tighten the pole clamps together around the pole with bolts, washers, and nuts.

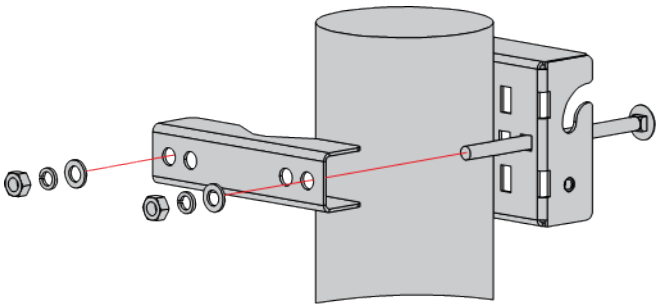

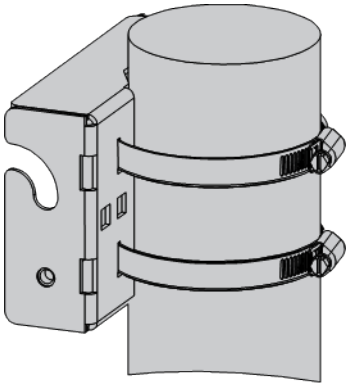

Note: The diameter of the pole that is supported by the brackets is 50-100 mm. If the pole diameter is more than this value, the steel strips can be used. The standard mounting kit does not include steel strips. If needed, they should be purchased separately.

Step 3. Hang up the enclosure and fasten it with two M6*12 screws.

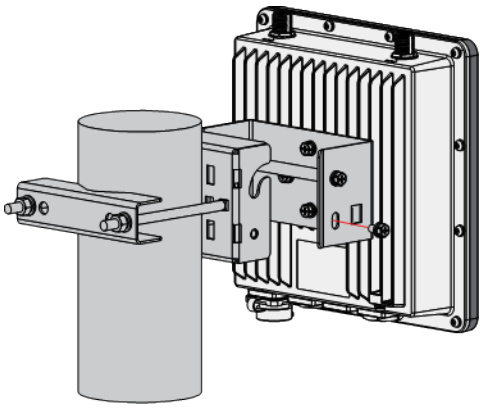

6.2 Connecting the PoE Adapter

Step 1. Connect the Ethernet cable from the enclosure to the Ethernet port labeled POE on the adapter.

Step 2. Connect an Ethernet cable from your LAN network to the Ethernet port labeled LAN on the adapter.

Step 3. Connect one end of the power cord to the adapter. Connect the other end of the power cord to a power outlet.

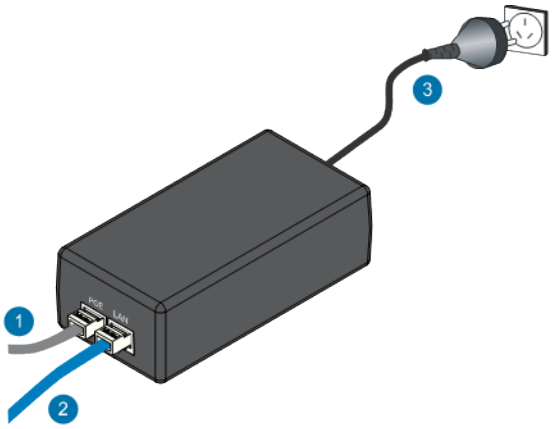

6.3 Weather Protection

To better protect the Ethernet cable gland and the antenna connector from the weather, you need to cover them with PVC tape.

Step 1. Clean the surface area of the connector that will be wrapped. Wrap a layer of PVC tape with a 50% overlap according to the rotation direction of the connector. Continue wrapping the PVC tape to about 10 mm below the end of the connector.

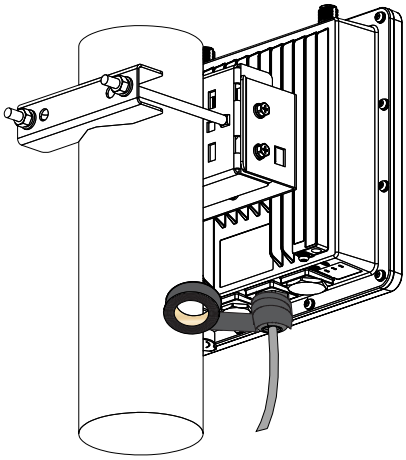

Step 2. Cut off about 50 cm waterproof tape. Stretch it to double the length. Wrap three layers around the connector with a 50% overlap. Hold the tape in place with your hand for a few seconds.

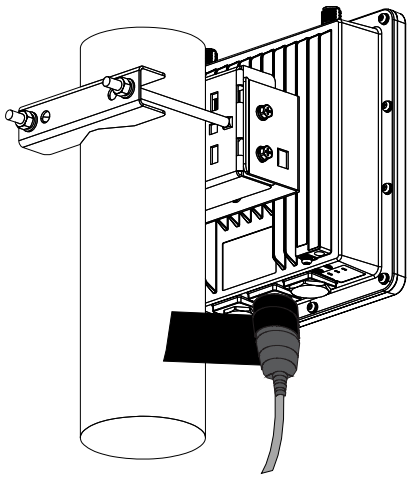

Step 3. Wrap three additional layers with PVC tape with natural uncoiling force and a 50% overlap. Make sure to cover the head and the tail of the connector.

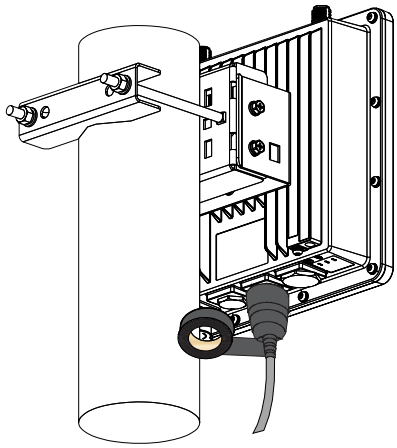

7 Accessing the gateway

Make sure all the antennas are connected before powering the Gateway.

The Gateway comes configured in such a way that you can use either the Ethernet port or the Wi-Fi in AP mode to connect to the Management platform.

In both modes you can access the Management UI via a web browser pointing to the IP address of the gateway (check your router DHCP list). Alternately, the IP Address (192.168.230.1) is preconfigured as the one to use for access to the device provided you are directly connected to it.

7.1 Wi-Fi AP mode

By default, the gateway is configured to work in Access Point (AP) mode. It has the following parameters:

- **Wi-Fi** - SSID: RAK72XX_xxxx (no password is required to connect via Wi-Fi, "xxxx" represents the last two bytes of the gateway's MAC address)

- **Web UI** - Connect via a browser to the IP address assigned to the gateway, which is 192.168.230.1 by default. You should see the login page shown below. Use the credentials below:
    - UI user: root
    - UI password: root

7.2 WAN port (DHCP IP) mode

Connect the Ethernet cable to the port marked “ETH” on the Gateway and the other end to the PoE port of the PoE injector. Connect the LAN port of the PoE injector to your PC.

The default IP is 169.254.X.X. The last two segments (X.X) are mapped from the last four bits of the MAC address of your gateway. For example, the last four bits of the MAC address are 0F:01, and the IP address is 169.254.15.1. Make sure to manually set the address of your PC to one in the same network (for example 169.254.15.100). Use the same credentials for the Web UI as for AP mode.

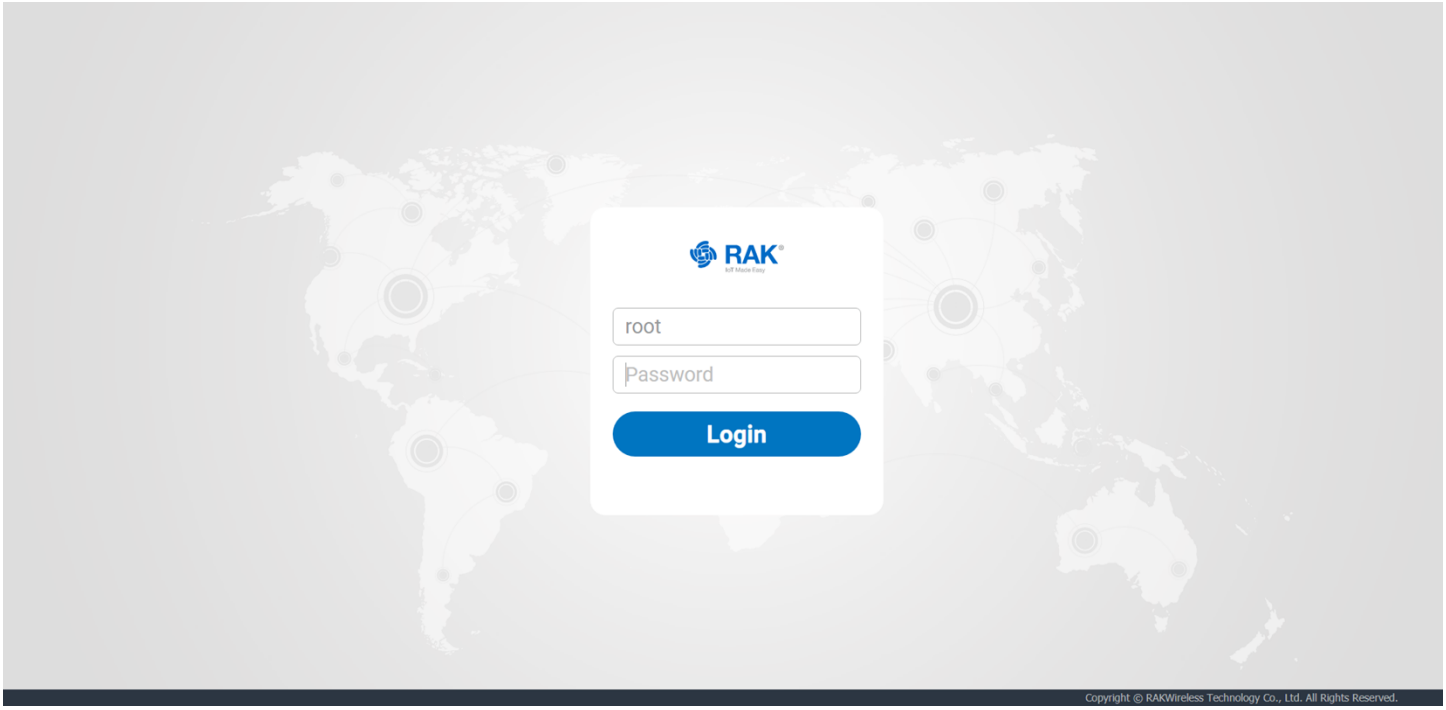

Note:

Detailed Quick Start Guides for the modules are available in the RAKwireless Documentation Center:
https://docs.rakwireless.com/Product-Categories/WisGate/RAK7289/Overview/#product-description

8 Certification warning

This device complies with Part 15 of the FCC Rules. Operation is subject to the following two conditions: (1) this device may not cause harmful interference, and (2) this device must accept any interference received, including interference that may cause undesired operation.

FCC Caution:
Changes or modifications not expressly approved by the part responsible for compliance could void the user's authority to operate the equipment.
FCC RF Radiation Exposure Statement Caution: This device shall be installed with a minimum separation distance of 30 cm between the user or bystander and the device.

FCC Statement:
"This equipment has been tested and found to comply with the limits for a Class B digital device, pursuant to part 15 of the FCC Rules. These limits are designed to provide reasonable protection against harmful interference in a residential installation. This equipment generates, uses and can radiate radio frequency energy and, if not installed and used in accordance with the instructions, may cause harmful interference to radio communications. However, there is no guarantee that interference will not occur in a particular installation. If this equipment does cause harmful interference to radio or television reception, which can be determined by turning the equipment off and on, the user is encouraged to try to correct the interference by one or more of the following measures:
—Reorient or relocate the receiving antenna.
—Increase the separation between the equipment and receiver.
—Connect the equipment into an outlet on a circuit different from that to which the receiver is connected.
—Consult the dealer or an experienced radio/TV technician for help."

IC statement:
This device complies with Industry Canada licence-exempt RSS standard(s).
Operation is subject to the following two conditions: (1) this device may not cause interference, and (2) this device must accept any interference, including interference that may cause undesired operation of the device.

Le présent appareil est conforme aux CNR d'Industrie Canada applicables aux appareils radio exempts de licence. L'exploitation est autorisée aux deux conditions suivantes : (1) l'appareil ne doit pas produire de brouillage, et (2) l'utilisateur de l'appareil doit accepter tout brouillage radioélectrique subi, même si le brouillage est susceptible d'en compromettre le fonctionnement.

This equipment complies with Industry Canada radiation exposure limits set forth with a separation and this device shall be installed with a minimum separation distance of 30 cm between the user or bystander and the device.
L'appareil est conforme aux limites d'exposition aux rayonnements établies par Industrie Canada et est muni d'un dispositif d'isolement qui doit être installé à une distance minimale de 30 cm entre l'utilisateur ou le spectateur et l'appareil.

The device must be installed by a trained professional (training in RF Exposure) to ensure that the device is installed correctly with all safeguards in place.
L'équipement doit être installé par un professionnel qualifié (formation à l'exposition aux radiofréquences) pour s'assurer qu'il est correctement installé et que toutes les mesures de protection sont en place.