# FCC Test Report

Report No.: AGC03175180501EE01

| | | |
|---|---|---|
| **FCC ID** | : | 2AF6M3396993M432 |
| **APPLICATION PURPOSE** | : | Original Equipment |
| **PRODUCT DESIGNATION** | : | MOBILE PHONE |
| **BRAND NAME** | : | Cellacom |
| **MODEL NAME** | : | M432 |
| **CLIENT** | : | Mobile Commodity Corporation |
| **DATE OF ISSUE** | : | June 12, 2018 |
| **STANDARD(S)** | : | FCC Part 15B Rules |
| **REPORT VERSION** | : | V1.0 |

Attestation of Global Compliance (Shenzhen) Co., Ltd

**CAUTION:**
This report shall not be reproduced except in full without the written permission of the test laboratory and shall not be quoted out of context.

The results shown in this test report refer only to the sample(s) tested unless otherwise stated and the sample(s) are retained for 30 days only. The document is issued by AGC, this document cannot be reproduced except in full with our prior written permission. The more details and the authenticity of the report will be confirmed at http://www.agc-cert.com.

## Report Revise Record

| Report Version | Revise Time | Issued Date | Valid Version | Notes |
|---|---|---|---|---|
| V1.0 | / | June 12, 2018 | Valid | Original Report |

The results shown in this test report refer only to the sample(s) tested unless otherwise stated and the sample(s) are retained for 30 days only. The document is issued by AGC, this document cannot be reproduced except in full with our prior written permission. The more details and the authenticity of the report will be confirmed at http://www.agc-cert.com.

# TABLE OF CONTENTS

**1. VERIFICATION OF CONFORMITY ..... 4**
**2. SYSTEM DESCRIPTION ..... 4**
**3. MEASUREMENT UNCERTAINTY ..... 6**
**4. PRODUCT INFORMATION ..... 7**
**5. SUPPORT EQUIPMENT ..... 8**
**6. TEST FACILITY ..... 9**
**7. TEST ITEMS AND THE RESULTS ..... 10**
**8. FCCLINE CONDUCTED EMISSION TEST ..... 11**
8.1. LIMITS OF LINE CONDUCTED EMISSION TEST ..... 11
8.2. BLOCK DIAGRAM OF TEST SETUP ..... 11
8.3. PROCEDURE OF LINE CONDUCTED EMISSION TEST ..... 12
8.4. TEST RESULT OF LINE CONDUCTED EMISSION TEST ..... 13
**9. FCC RADIATED EMISSION TEST ..... 15**
9.1. EXCEPT FOR CLASS A DIGITAL DEVICES, THE FIELD STRENGTH OF RADIATED EMISSIONS FROM UNINTENTIONAL RADIATORS AT A DISTANCE OF 3 METERS SHALL NOT EXCEED THE FOLLOWING VALUES: ..... 15
9.2. BLOCK DIAGRAM OF TEST SETUP ..... 16
9.3. PROCEDURE OF RADIATED EMISSION TEST ..... 17
9.4. TEST RESULT OF RADIATED EMISSION TEST ..... 18
**APPENDIX A: PHOTOGRAPHS OF TEST SETUP ..... 22**

The results shown in this test report refer only to the sample(s) tested unless otherwise stated and the sample(s) are retained for 30 days only. The document is issued by AGC, this document cannot be reproduced except in full with our prior written permission. The more details and the authenticity of the report will be confirmed at http://www.agc-cert.com.

## 1. VERIFICATION OF CONFORMITY

| | |
|---|---|
| **Applicant** | Mobile Commodity Corporation |
| **Address** | 20955 Pathfinder Road, Suite 200, Diamond Bar, CA 91765, USA |
| **Manufacturer** | Cellacom Incorporation |
| **Address** | 20955 Pathfinder Road, Suite 100, Diamond Bar, CA 91765, USA |
| **Product Designation** | MOBILE PHONE |
| **Brand Name** | Cellacom |
| **Test Model** | M432 |
| **Serial Model** | M432_lite, M432_plus, L432 |
| **Difference Description** | All the same except the model name. |
| **Date of test** | May. 28, 2018~June 12, 2018 |
| **Deviation** | None |
| **Condition of Test Sample** | Normal |
| **Report Template** | AGCRT-US-IT/AC |

The above equipment was tested by Attestation of Global Compliance (Shenzhen) Co., Ltd. for compliance with the requirements set forth in the FCC Rules and Regulations Part 15, the measurement procedure according to ANSI C63.4:2014. This said equipment in the configuration described in this report shows the maximum emission levels emanating from equipment are within the compliance requirements.
The test results of this report relate only to the tested sample identified in this report.

Tested By Nice.xie

Nice Xie(Xie xiaosong) June 12, 2018

Reviewed By Bart xie

Bart Xie(Xie Xiaobin) June 12, 2018

Approved By Forrest Lei

Forrest Lei(Lei Yonggang)
Authorized Officer June 12, 2018

The results shown in this test report refer only to the sample(s) tested unless otherwise stated and the sample(s) are retained for 30 days only. The document is issued by AGC, this document cannot be reproduced except in full with our prior written permission. The more details and the authenticity of the report will be confirmed at http://www.agc-cert.com.

## 2. SYSTEM DESCRIPTION

**EUT test procedure:**

1. Connect EUT and peripheral devices (PC) through USB port.
2. Power on the EUT, use the software to transfer data between EUT and PC.
3. Make sure the EUT operates normally during the test.

**Test Mode**

| TEST MODE DESCRIPTION | | |
|---|---|---|
| **NO.** | **TEST MODE DESCRIPTION** | **WORST** |
| 1 | USB (connection for data transferring) | V |
| Note:<br>1. V means EMI worst mode<br>2. USB cable is provided by AGC-Lab. | | |

The results shown in this test report refer only to the sample(s) tested unless otherwise stated and the sample(s) are retained for 30 days only. The document is issued by AGC, this document cannot be reproduced except in full with our prior written permission. The more details and the authenticity of the report will be confirmed at http://www.agc-cert.com.

## 3. MEASUREMENT UNCERTAINTY

The uncertainty is calculated using the methods suggested in the “Guide to the Expression of Uncertainty in measurement” (GUM) published by CISPR and ANSI.

- Uncertainty of Conducted Emission, Uc = ±3.2 dB
- Uncertainty of Radiated Emission below 1GHz, Uc = ±3.9 dB
- Uncertainty of Radiated Emission above 1GHz, Uc = ±4.8 dB

The results shown in this test report refer only to the sample(s) tested unless otherwise stated and the sample(s) are retained for 30 days only. The document is issued by AGC, this document cannot be reproduced except in full with our prior written permission. The more details and the authenticity of the report will be confirmed at http://www.agc-cert.com.

## 4. PRODUCT INFORMATION

| | |
|---|---|
| **Housing Type** | Plastic and metal |
| **Hardware Version** | H93_M_V1.0 |
| **Software Version** | M432_V1.0 |
| **EUT Input Rating** | DC3.7V by battery or DC 5V by Micro-USB |

**I/O Port Information (☒Applicable ☐Not Applicable)**

| I/O Port of EUT | | | |
|---|---|---|---|
| **I/O Port Type** | **Q'TY** | **Cable** | **Tested with** |
| USB Port | 1 | - | - |
| earphone | 1 | - | 1.2m, Unshielded |

The results shown in this test report refer only to the sample(s) tested unless otherwise stated and the sample(s) are retained for 30 days only. The document is issued by AGC, this document cannot be reproduced except in full with our prior written permission. The more details and the authenticity of the report will be confirmed at http://www.agc-cert.com.

## 5. SUPPORT EQUIPMENT

| Device Type | Manufacturer | Model Name | Serial No. | Data Cable | Power Cable |
|---|---|---|---|---|---|
| PC | Apple Inc. | -- | -- | -- | 0.8m Unshielded |
| Adapter | Apple Inc. | -- | -- | -- | 1.25m Unshielded |

**Note:** All the above equipment/cables were placed in worse case positions to maximize emission signals during emission test.

The results shown in this test report refer only to the sample(s) tested unless otherwise stated and the sample(s) are retained for 30 days only. The document is issued by AGC, this document cannot be reproduced except in full with our prior written permission. The more details and the authenticity of the report will be confirmed at http://www.agc-cert.com.

## 6. TEST FACILITY

| | |
|---|---|
| **Site** | Attestation of Global Compliance (Shenzhen) Co., Ltd |
| **Location** | 1-2F., Bldg.2, No.1-4, Chaxi Sanwei Technical Industrial Park, Gushu, Xixiang, Bao'an District B112-B113, Bldg.12, Baoan Bldg Materials Center, No.1 of Xixiang Inner Ring Road, Baoan District, Shenzhen 518012 |
| **NVLAP LAB CODE** | 600153-0 |
| **Designation Number** | CN5028 |
| **Description** | Attestation of Global Compliance(Shenzhen) Co., Ltd is accredited by National Voluntary Laboratory Accreditation program, NVLAP Code 600153-0 |

### TEST EQUIPMENT OF CONDUCTED EMISSION TEST

| Equipment | Manufacturer | Model | S/N | Cal. Date | Cal. Due |
|---|---|---|---|---|---|
| TEST RECEIVER | R&S | ESPI | 101206 | Jun.20, 2017 | Jun.19, 2018 |
| LISN | R&S | ESH2-Z5 | 100086 | Aug.21, 2017 | Aug.20, 2018 |

### TEST EQUIPMENT OF RADIATED EMISSION TEST

| Equipment | Manufacturer | Model | S/N | Cal. Date | Cal. Due |
|---|---|---|---|---|---|
| TEST RECEIVER | R&S | ESCI | 10096 | Jun.20, 2017 | Jun.19, 2018 |
| EXA Signal Analyzer | Aglient | N9010A | MY53470504 | Dec.08, 2017 | Dec.07, 2018 |
| Horn antenna | SCHWARZBECK | BBHA 9170 | #768 | Sep.20, 2017 | Sep.19, 2018 |
| preamplifier | ChengYi | EMC184045SE | 980508 | Sep.15, 2017 | Sep.14, 2018 |
| Double-Ridged Waveguide Horn | ETS LINDGREN | 3117 | 00034609 | May.18, 2017 | May.17, 2019 |
| Broadband Preamplifier | SCHWARZBECK | BBV 9718 | 9718-205 | Jun.20, 2017 | Jun.19, 2018 |
| ANTENNA | SCHWARZBECK | VULB9168 | D69250 | Sep.28, 2017 | Sep.27, 2018 |

The results shown in this test report refer only to the sample(s) tested unless otherwise stated and the sample(s) are retained for 30 days only. The document is issued by AGC, this document cannot be reproduced except in full with our prior written permission. The more details and the authenticity of the report will be confirmed at http://www.agc-cert.com.

## 7. TEST ITEMS AND THE RESULTS

| Test item | Test Requirement | Test Method | Class/Severity | Result |
|---|---|---|---|---|
| CONDUCTED EMISSION | FCC Part 15.107 Rules | ANSI C63.4:2014 | Class B | Pass |
| RADIATED EMISSION | FCC Part 15.109 Rules | ANSI C63.4:2014 | Class B | Pass |

The results shown in this test report refer only to the sample(s) tested unless otherwise stated and the sample(s) are retained for 30 days only. The document is issued by AGC, this document cannot be reproduced except in full with our prior written permission. The more details and the authenticity of the report will be confirmed at http://www.agc-cert.com.

# 8. FCCLINE CONDUCTED EMISSION TEST

## 8.1. LIMITS OF LINE CONDUCTED EMISSION TEST

| Frequency | Maximum RF Line Voltage | |
|---|---|---|
| | Q.P.( dBuV) | Average( dBuV) |
| 150kHz-500kHz | 66-56 | 56-46 |
| 500kHz-5MHz | 56 | 46 |
| 5MHz-30MHz | 60 | 50 |

**Note:**
1. The lower limit shall apply at the transition frequency.
2. The limit decreases linearly with the logarithm of the frequency in the range 0.15 MHz to 0.50MHz.

## 8.2. BLOCK DIAGRAM OF TEST SETUP

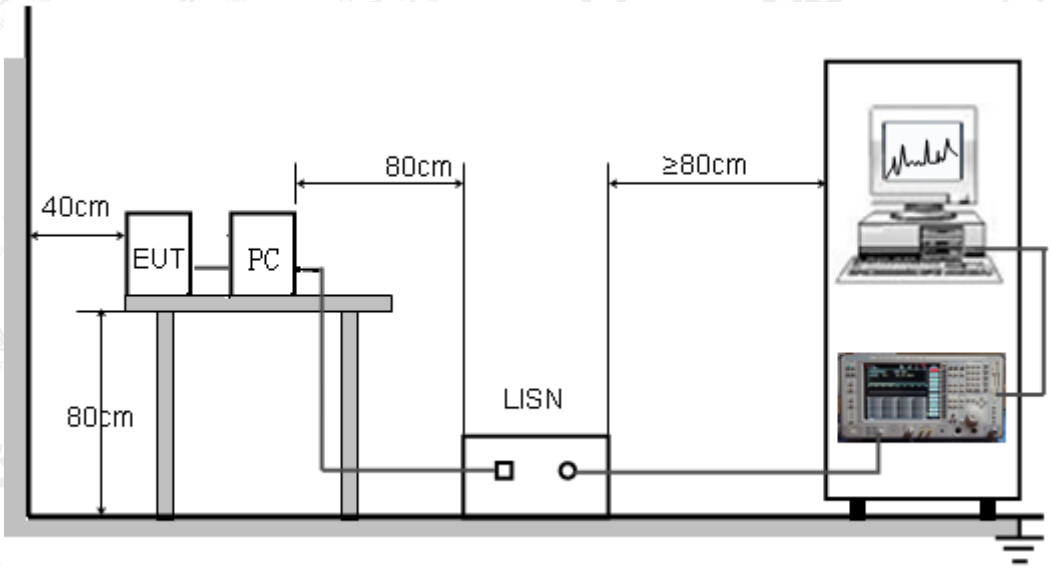


The results shown in this test report refer only to the sample(s) tested unless otherwise stated and the sample(s) are retained for 30 days only. The document is issued by AGC, this document cannot be reproduced except in full with our prior written permission. The more details and the authenticity of the report will be confirmed at http://www.agc-cert.com.

## 8.3. PROCEDURE OF LINE CONDUCTED EMISSION TEST

(1) The equipment was set up as per the test configuration to simulate typical actual usage per the user's manual. When the EUT is a tabletop system, a wooden table with a height of 0.8 meters is used and is placed on the ground plane as per ANSI C63.4 (see Test Facility for the dimensions of the ground plane used). When the EUT is a floor-standing equipment, it is placed on the ground plane which has a 3-12 mm non-conductive covering to insulate the EUT from the ground plane.

(2) Support equipment, if needed, was placed as per ANSI C63.4.

(3) All I/O cables were positioned to simulate typical actual usage as per ANSI C63.4.

(4) The EUT received DC5V power from PC with receive AC120V/60Hz power from a LISN.

(5) The EUT test program was started. Emissions were measured on each current carrying line of the EUT using a spectrum Analyzer / Receiver connected to the LISN powering the EUT. The LISN has two monitoring points: Line 1 (Hot Side) and Line 2 (Neutral Side). Two scans were taken: one with Line 1 connected to Analyzer / Receiver and Line 2 connected to a 50 ohm load; the second scan had Line 1 connected to a 50 ohm load and Line 2 connected to the Analyzer / Receiver.

(6) Analyzer / Receiver scanned from 150 kHz to 30MHz for emissions in each of the test modes.

(7) During the above scans, the emissions were maximized by cable manipulation.

(8) A scan was taken on both power lines, Line 1 and Line 2, recording at least the six highest emissions.

(9) Emission frequency and amplitude were recorded into a computer in which correction factors were used to calculate the emission level and compare reading to the applicable limit. If EUT emission level was less –2dB to the A.V. limit in Peak mode, then the emission signal was re-checked using Q.P and Average detector.

The test data of the worst case condition (mode 1) was reported on the Summary Data page.

The results shown in this test report refer only to the sample(s) tested unless otherwise stated and the sample(s) are retained for 30 days only. The document is issued by AGC, this document cannot be reproduced except in full with our prior written permission. The more details and the authenticity of the report will be confirmed at http://www.agc-cert.com.

## 8.4. TEST RESULT OF LINE CONDUCTED EMISSION TEST

LINE CONDUCTED EMISSION TEST-L

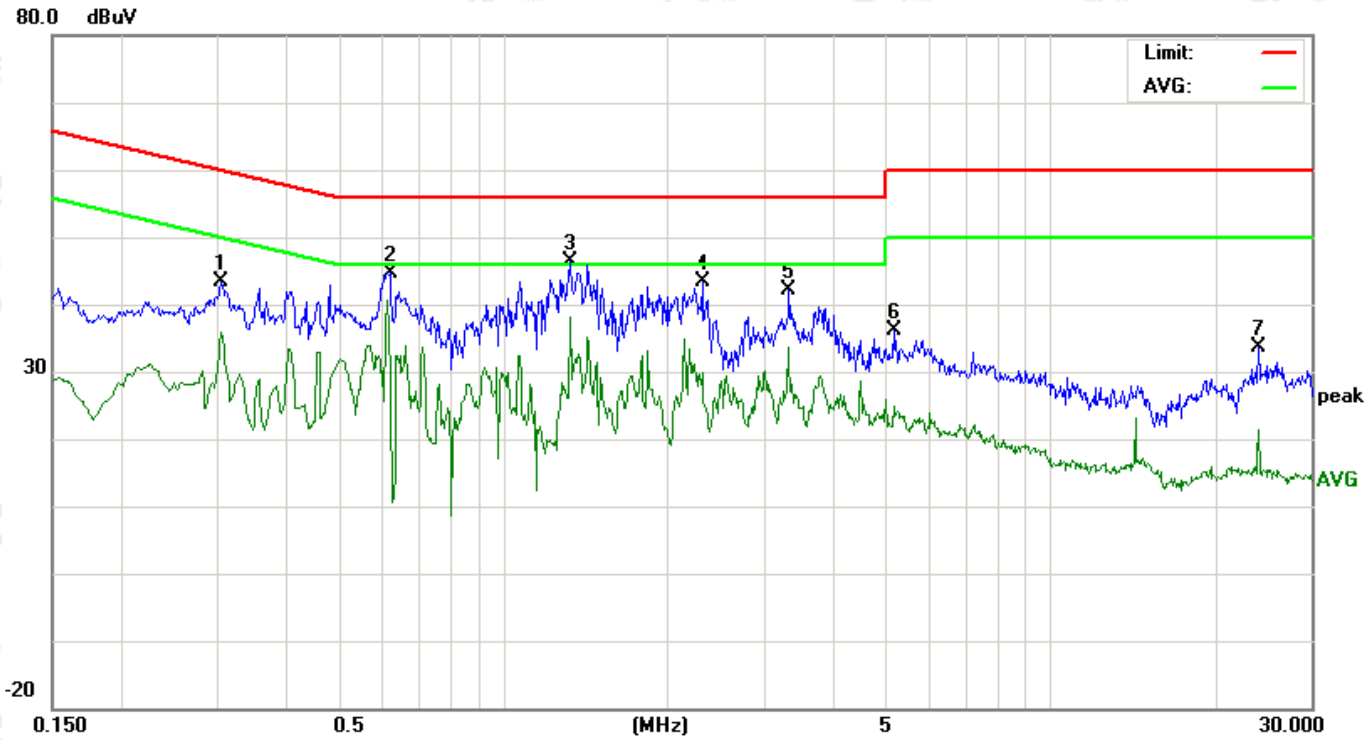


| No. | Freq. (MHz) | Reading_Level (dBuV) | | | Correct Factor | Measurement (dBuV) | | | Limit (dBuV) | | Margin (dB) | | P/F | Comment |
|---|---|---|---|---|---|---|---|---|---|---|---|---|---|---|
| | | Peak | QP | AVG | dB | Peak | QP | AVG | QP | AVG | QP | AVG | | |
| 1 | 0.3059 | 33.11 | | 25.62 | 10.29 | 43.40 | | 35.91 | 60.08 | 50.08 | -16.68 | -14.17 | P | |
| 2 | 0.6219 | 34.40 | | 18.27 | 10.32 | 44.72 | | 28.59 | 56.00 | 46.00 | -11.28 | -17.41 | P | |
| 3 | 1.3300 | 35.93 | | 27.63 | 10.38 | 46.31 | | 38.01 | 56.00 | 46.00 | -9.69 | -7.99 | P | |
| 4 | 2.3100 | 32.93 | | 19.47 | 10.35 | 43.28 | | 29.82 | 56.00 | 46.00 | -12.72 | -16.18 | P | |
| 5 | 3.3300 | 31.63 | | 21.19 | 10.52 | 42.15 | | 31.71 | 56.00 | 46.00 | -13.85 | -14.29 | P | |
| 6 | 5.1736 | 25.83 | | 14.51 | 10.24 | 36.07 | | 24.75 | 60.00 | 50.00 | -23.93 | -25.25 | P | |
| 7 | 24.0180 | 23.41 | | 11.18 | 10.11 | 33.52 | | 21.29 | 60.00 | 50.00 | -26.48 | -28.71 | P | |

The results shown in this test report refer only to the sample(s) tested unless otherwise stated and the sample(s) are retained for 30 days only. The document is issued by AGC, this document cannot be reproduced except in full with our prior written permission. The more details and the authenticity of the report will be confirmed at http://www.agc-cert.com.

LINE CONDUCTED EMISSION TEST-N

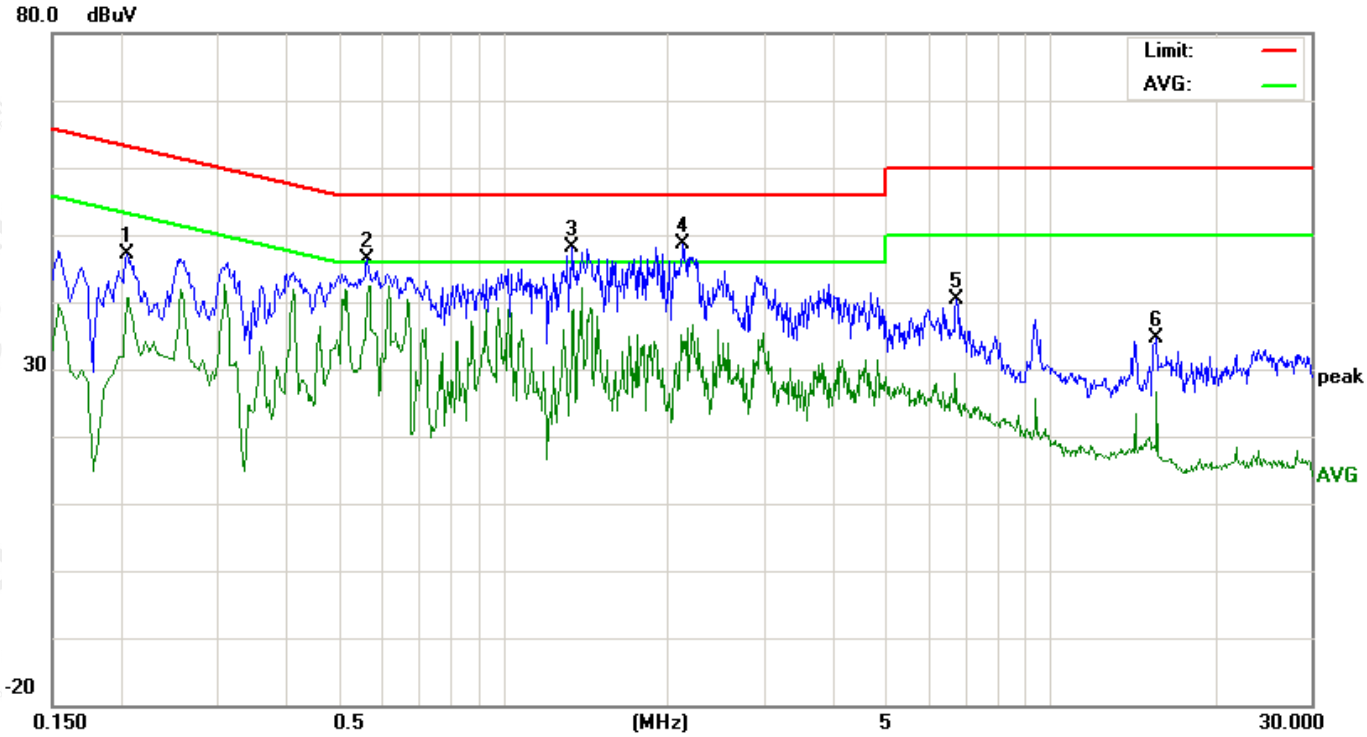


| No. | Freq. (MHz) | Reading_Level (dBuV) | | | Correct Factor | Measurement (dBuV) | | | Limit (dBuV) | | Margin (dB) | | P/F | Comment |
|---|---|---|---|---|---|---|---|---|---|---|---|---|---|---|
| | | Peak | QP | AVG | dB | Peak | QP | AVG | QP | AVG | QP | AVG | | |
| 1 | 0.2058 | 36.85 | | 30.36 | 10.22 | 47.07 | | 40.58 | 63.37 | 53.37 | -16.30 | -12.79 | P | |
| 2 | 0.5658 | 35.91 | | 30.39 | 10.34 | 46.25 | | 40.73 | 56.00 | 46.00 | -9.75 | -5.27 | P | |
| 3 | 1.3420 | 37.65 | | 27.90 | 10.38 | 48.03 | | 38.28 | 56.00 | 46.00 | -7.97 | -7.72 | P | |
| 4 | 2.1419 | 38.34 | | 22.38 | 10.28 | 48.62 | | 32.66 | 56.00 | 46.00 | -7.38 | -13.34 | P | |
| 5 | 6.7499 | 29.97 | | 14.76 | 10.33 | 40.30 | | 25.09 | 60.00 | 50.00 | -19.70 | -24.91 | P | |
| 6 | 15.6777 | 24.54 | | 16.49 | 10.11 | 34.65 | | 26.60 | 60.00 | 50.00 | -25.35 | -23.40 | P | |

**RESULT: PASS**

The results shown in this test report refer only to the sample(s) tested unless otherwise stated and the sample(s) are retained for 30 days only. The document is issued by AGC, this document cannot be reproduced except in full with our prior written permission. The more details and the authenticity of the report will be confirmed at http://www.agc-cert.com.

# 9. FCC RADIATED EMISSION TEST

## 9.1. EXCEPT FOR CLASS A DIGITAL DEVICES, THE FIELD STRENGTH OF RADIATED EMISSIONS FROM UNINTENTIONAL RADIATORS AT A DISTANCE OF 3 METERS SHALL NOT EXCEED THE FOLLOWING VALUES:

| Frequency (MHz) | Distance (m) | Maximum Field Strength Limit (dBuV/m/ Q.P.) |
|---|---|---|
| 30~88 | 3 | 40.0 |
| 88~216 | 3 | 43.5 |
| 216~960 | 3 | 46.0 |
| Above 960 | 3 | 54.0 |

Note: The lower limit shall apply at the transition frequency.

### 9.1.1 The following table is the setting of spectrum analyzer and receiver:

| Spectrum Parameter | Setting |
|---|---|
| Start ~Stop Frequency | 9KHz~150KHz/RB 200Hz for QP |
| Start ~Stop Frequency | 150KHz~30MHz/RB 9KHz for QP |
| Start ~Stop Frequency | 30MHz~1000MHz/RB 120KHz for QP |
| Start ~Stop Frequency | 1GHz~26.5GHz<br>1MHz/1MHz for Peak, 1MHz/10Hz for Average |

| Receiver Parameter | Setting |
|---|---|
| Start ~Stop Frequency | 9KHz~150KHz/RB 200Hz for QP |
| Start ~Stop Frequency | 150KHz~30MHz/RB 9KHz for QP |
| Start ~Stop Frequency | 30MHz~1000MHz/RB 120KHz for QP |

The results shown in this test report refer only to the sample(s) tested unless otherwise stated and the sample(s) are retained for 30 days only. The document is issued by AGC, this document cannot be reproduced except in full with our prior written permission. The more details and the authenticity of the report will be confirmed at http://www.agc-cert.com.

## 9.2. BLOCK DIAGRAM OF TEST SETUP

System Diagram of Connections between EUT and Simulators

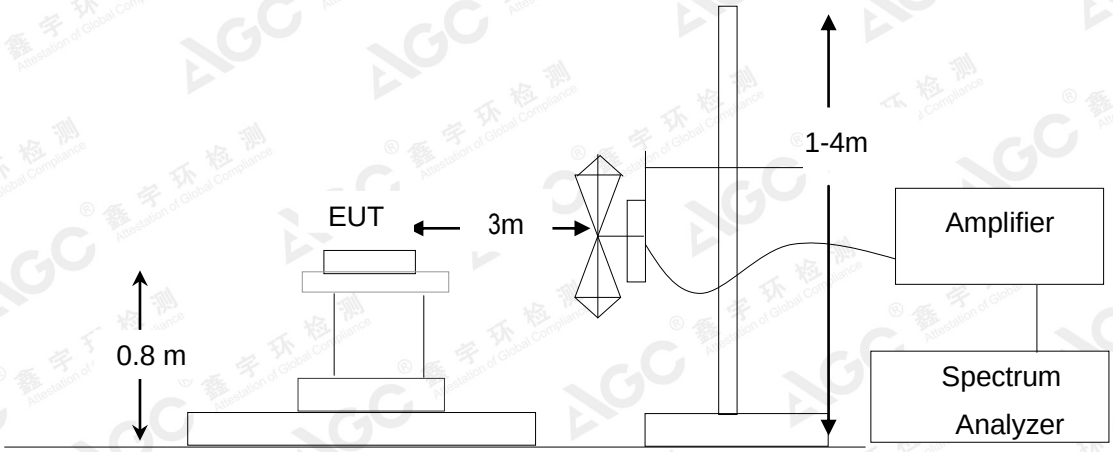


RADIATED EMISSION TEST SETUP ABOVE 1000MHz

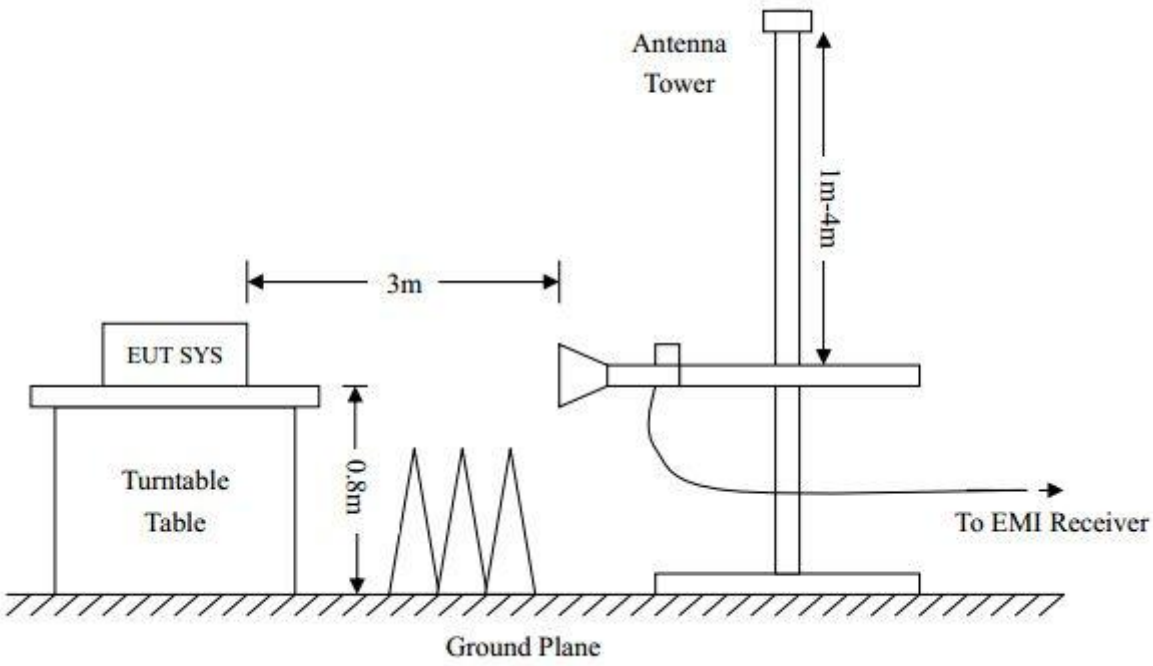


The results shown in this test report refer only to the sample(s) tested unless otherwise stated and the sample(s) are retained for 30 days only. The document is issued by AGC, this document cannot be reproduced except in full with our prior written permission. The more details and the authenticity of the report will be confirmed at http://www.agc-cert.com.

## 9.3. PROCEDURE OF RADIATED EMISSION TEST

1. Configure the EUT according to ANSI C63.4. The EUT was placed on the top of the turntable 0.8 meter above ground. The phase center of the receiving antenna mounted on the top of a height-variable antenna tower was placed 3 meters far away from the turntable.
2. Power on the EUT and all the supporting units. The turntable was rotated by 360 degrees to determine the position of the highest radiation.
3. The height of the broadband receiving antenna was varied between one meter and four meters above ground to find the maximum emissions field strength of both horizontal and vertical polarization.
4. For each suspected emissions, the antenna tower was scan (from 1 M to 4 M) and then the turntable was rotated (from 0 degree to 360 degrees) to find the maximum reading.
5. Set the test-receiver system to Peak or CISPR quasi-peak Detect Function with specified bandwidth under Maximum Hold Mode.
6. For emissions above 1GHz, use 1MHz RBW and 3MHz VBW for peak reading. Then 1MHz RBW and 3MHz VBW for average reading in spectrum analyzer. The EUT was placed on the top of the turntable 0.8 meter above ground. The phase center of the receiving antenna mounted on the top of a height-variable antenna tower was placed 3 meters far away from the turntable.
7. When the radiated emissions limits are expressed in terms of the average value of the emissions, and pulsed operation is employed, the measurement field strength shall be determined by averaging over one complete pulse train, including blanking intervals, as long as the pulse train does not exceed 0.1 seconds. As an alternative (provided the transmitter operates for longer than 0.1 seconds) or in cases where the pulse train exceeds 0.1 seconds, the measured field strength shall be determined from the average absolute voltage during a 0.1 second interval during which the field strength is at its maximum values.
8. If the emissions level of the EUT in peak mode was 3 dB lower than the average limit specified, then testing will be stopped and peak values of EUT will be reported, otherwise, the emissions which do not have 3 dB margin will be repeated one by one using the quasi-peak method for below 1GHz.
9. If the emission level of the EUT in peak mode was 10 dB lower than the limit specified, then testing could be stopped and the peak values of the EUT would be reported. Otherwise the emissions that did not have 10 dB margin would be re-tested one by one using peak, quasi-peak or average method as specified and then reported in a data sheet.
10. In case the emission is lower than 30MHz, loop antenna has to be used for measurement and the recorded data should be QP measured by receiver. High - Low scan is not required in this case.
11. The test data of the worst case condition (mode 1) was reported on the Summary Data page.

The results shown in this test report refer only to the sample(s) tested unless otherwise stated and the sample(s) are retained for 30 days only. The document is issued by AGC, this document cannot be reproduced except in full with our prior written permission. The more details and the authenticity of the report will be confirmed at http://www.agc-cert.com.

## 9.4. TEST RESULT OF RADIATED EMISSION TEST

RADIATED EMISSION TEST AT 3M DISTANCE-HORIZONTAL

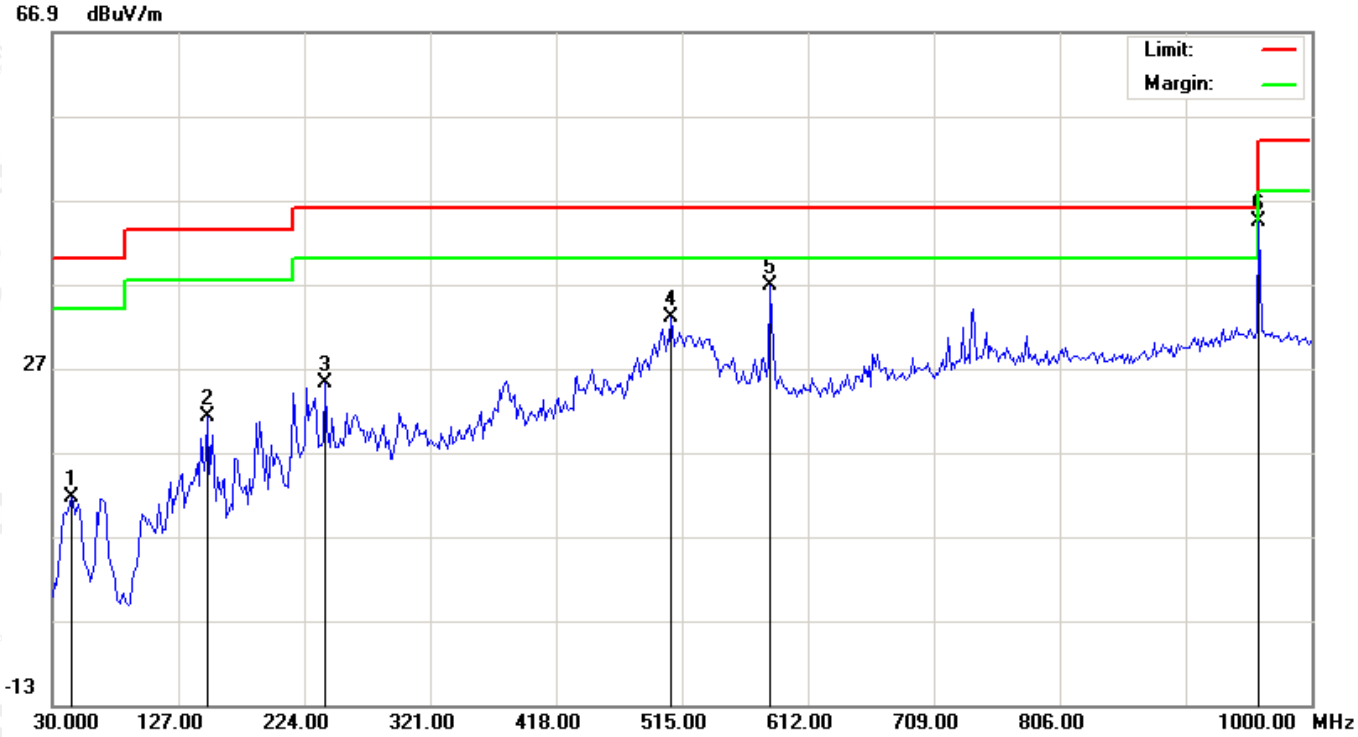


| No. | Mk | Freq. | Reading | Factor | Measurement | Limit | Over | Detector | Antenna Height | Table Degree | Comment |
|---|---|---|---|---|---|---|---|---|---|---|---|
| | - | MHz | dBuV | dB/m | dBuV/m | dBuV/m | dB | | cm | degree | |
| 1 | | 44.5500 | -0.09 | 11.60 | 11.51 | 40.00 | -28.49 | peak | | | |
| 2 | | 149.6333 | 8.33 | 12.85 | 21.18 | 43.50 | -22.32 | peak | | | |
| 3 | | 240.1667 | 17.40 | 7.90 | 25.30 | 46.00 | -20.70 | peak | | | |
| 4 | | 506.9167 | 11.60 | 21.32 | 32.92 | 46.00 | -13.08 | peak | | | |
| 5 | | 582.9000 | 13.59 | 23.30 | 36.89 | 46.00 | -9.11 | peak | | | |
| 6 | * | 959.5833 | 14.41 | 29.91 | 44.32 | 46.00 | -1.68 | peak | | | |

**RESULT: PASS**

The results shown in this test report refer only to the sample(s) tested unless otherwise stated and the sample(s) are retained for 30 days only. The document is issued by AGC, this document cannot be reproduced except in full with our prior written permission. The more details and the authenticity of the report will be confirmed at http://www.agc-cert.com.

RADIATED EMISSION TEST AT 3M DISTANCE-VERTICAL

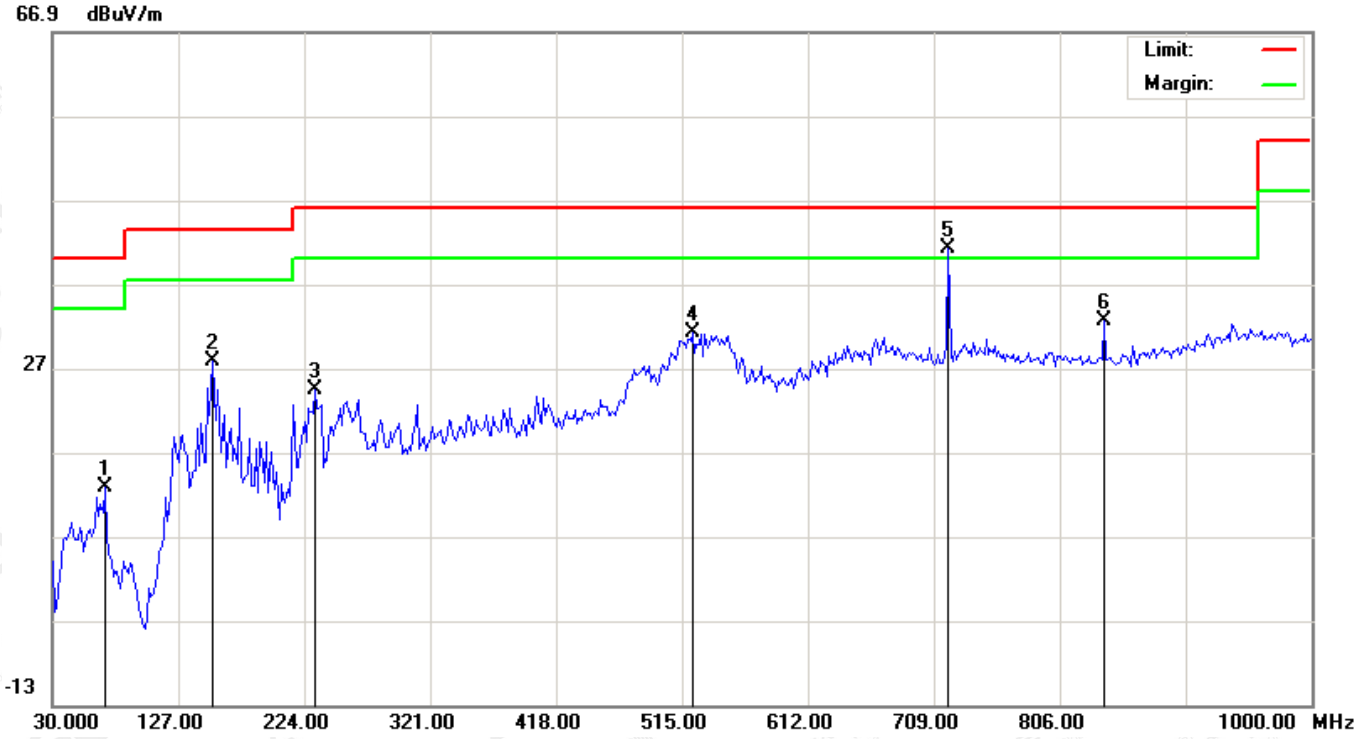


| No. | Mk | Freq. | Reading | Factor | Measurement | Limit | Over | Detector | Antenna Height | Table Degree | Comment |
|---|---|---|---|---|---|---|---|---|---|---|---|
| | - | MHz | dBuV | dB/m | dBuV/m | dBuV/m | dB | | cm | degree | |
| 1 | | 70.4167 | 8.65 | 4.16 | 12.81 | 40.00 | -27.19 | peak | | | |
| 2 | | 152.8667 | 12.55 | 15.28 | 27.83 | 43.50 | -15.67 | peak | | | |
| 3 | | 232.0833 | 12.25 | 12.14 | 24.39 | 46.00 | -21.61 | peak | | | |
| 4 | | 523.0833 | 9.43 | 21.75 | 31.18 | 46.00 | -14.82 | peak | | | |
| 5 | * | 720.3167 | 15.40 | 25.78 | 41.18 | 46.00 | -4.82 | peak | | | |
| 6 | | 839.9500 | 5.23 | 27.31 | 32.54 | 46.00 | -13.46 | peak | | | |

**RESULT: PASS**

Note: 1.Measurement = Reading + Factor, Over = Measurement – Limit.

2. The “Factor” value can be calculated automatically by software of measurement system.

The results shown in this test report refer only to the sample(s) tested unless otherwise stated and the sample(s) are retained for 30 days only. The document is issued by AGC, this document cannot be reproduced except in full with our prior written permission. The more details and the authenticity of the report will be confirmed at http://www.agc-cert.com.

RADIATED EMISSION ABOVE 1GHZ (1-10TH HARMONICS) –HORIZONTAL

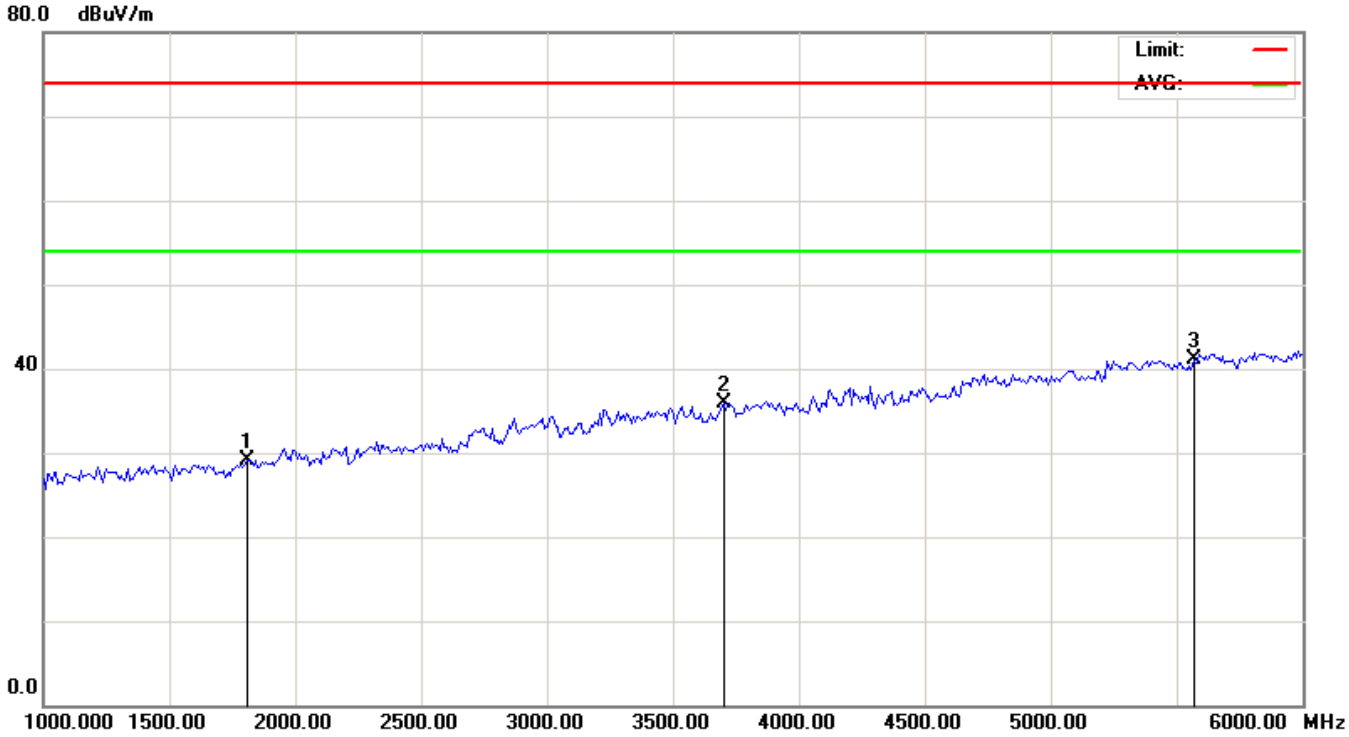


| No. | Mk. | Freq. | Reading | Factor | Measurement | Limit | Over | Detector | Antenna Height | Table Degree | Comment |
|---|---|---|---|---|---|---|---|---|---|---|---|
| | | MHz | dBuV | dB/m | dBuV/m | dBuV/m | dB | | cm | degree | |
| 1 | | 1808.333 | 13.59 | 15.50 | 29.09 | 74.00 | -44.91 | peak | | | |
| 2 | | 3700.000 | 19.21 | 16.63 | 35.84 | 74.00 | -38.16 | peak | | | |
| 3 | * | 5566.667 | 25.17 | 15.85 | 41.02 | 74.00 | -32.98 | peak | | | |

The results shown in this test report refer only to the sample(s) tested unless otherwise stated and the sample(s) are retained for 30 days only. The document is issued by AGC, this document cannot be reproduced except in full with our prior written permission. The more details and the authenticity of the report will be confirmed at http://www.agc-cert.com.

RADIATED EMISSION ABOVE 1GHZ (1-10TH HARMONICS) –VERTICAL

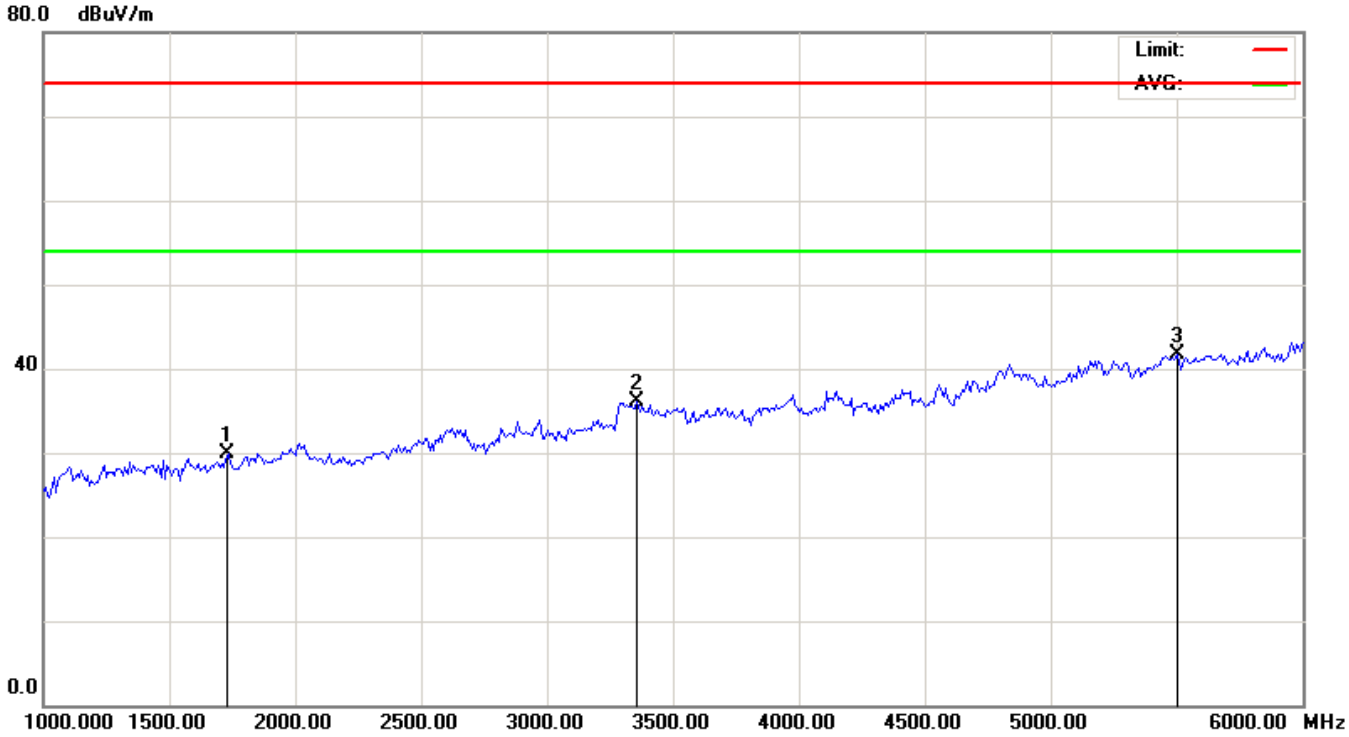


| No. | Mk | Freq. | Reading | Factor | Measurement | Limit | Over | Detector | Antenna Height | Table Degree | Comment |
|---|---|---|---|---|---|---|---|---|---|---|---|
| | - | MHz | dBuV | dB/m | dBuV/m | dBuV/m | dB | | cm | degree | |
| 1 | | 1733.333 | 14.50 | 15.47 | 29.97 | 74.00 | -44.03 | peak | | | |
| 2 | | 3358.333 | 19.75 | 16.26 | 36.01 | 74.00 | -37.99 | peak | | | |
| 3 | * | 5500.000 | 25.77 | 15.84 | 41.61 | 74.00 | -32.39 | peak | | | |

**Note:** 1. Emissions range from 6GHz to 12.5GHz have 20dB margin. No recording in the test report.
2. Factor=Antenna Factor + Cable loss - Amplifier gain, Margin=Measurement-Limit.
3. The “Factor” value can be calculated automatically by software of measurement system.

The results shown in this test report refer only to the sample(s) tested unless otherwise stated and the sample(s) are retained for 30 days only. The document is issued by AGC, this document cannot be reproduced except in full with our prior written permission. The more details and the authenticity of the report will be confirmed at http://www.agc-cert.com.

# APPENDIX A: PHOTOGRAPHS OF TEST SETUP

FCC LINE CONDUCTED EMISSION TEST SETUP

FCC RADIATED EMISSION TEST SETUP

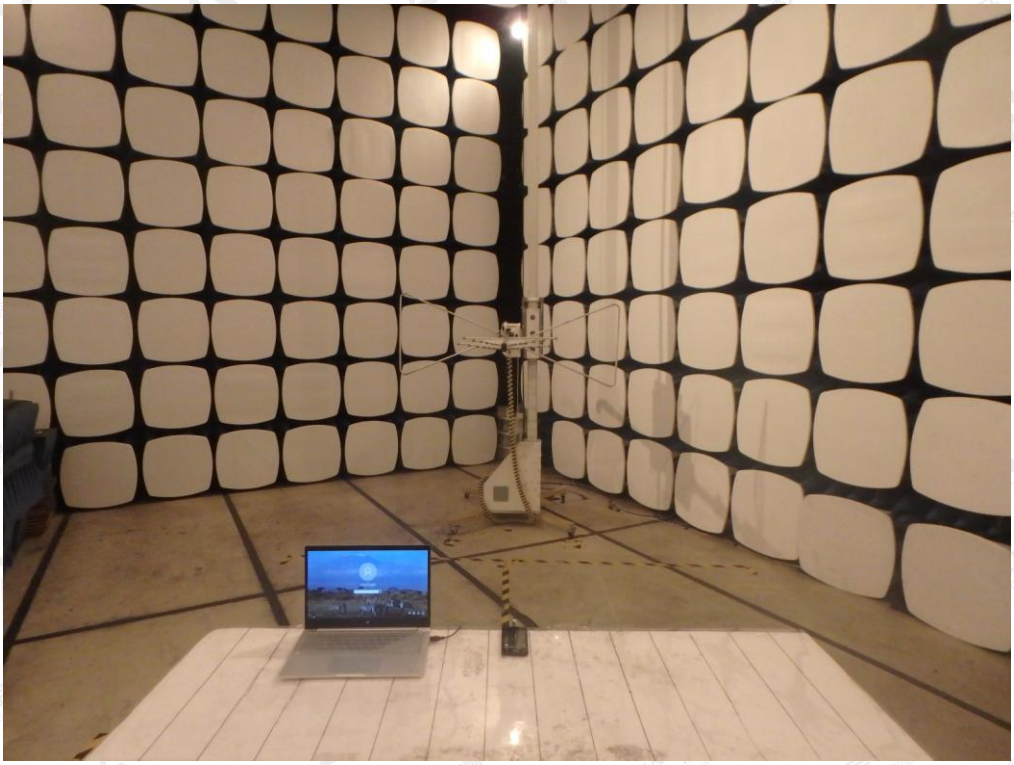

The results shown in this test report refer only to the sample(s) tested unless otherwise stated and the sample(s) are retained for 30 days only. The document is issued by AGC, this document cannot be reproduced except in full with our prior written permission. The more details and the authenticity of the report will be confirmed at http://www.agc-cert.com.

FCC RADIATED EMISSION ABOVE 1G TEST SETUP

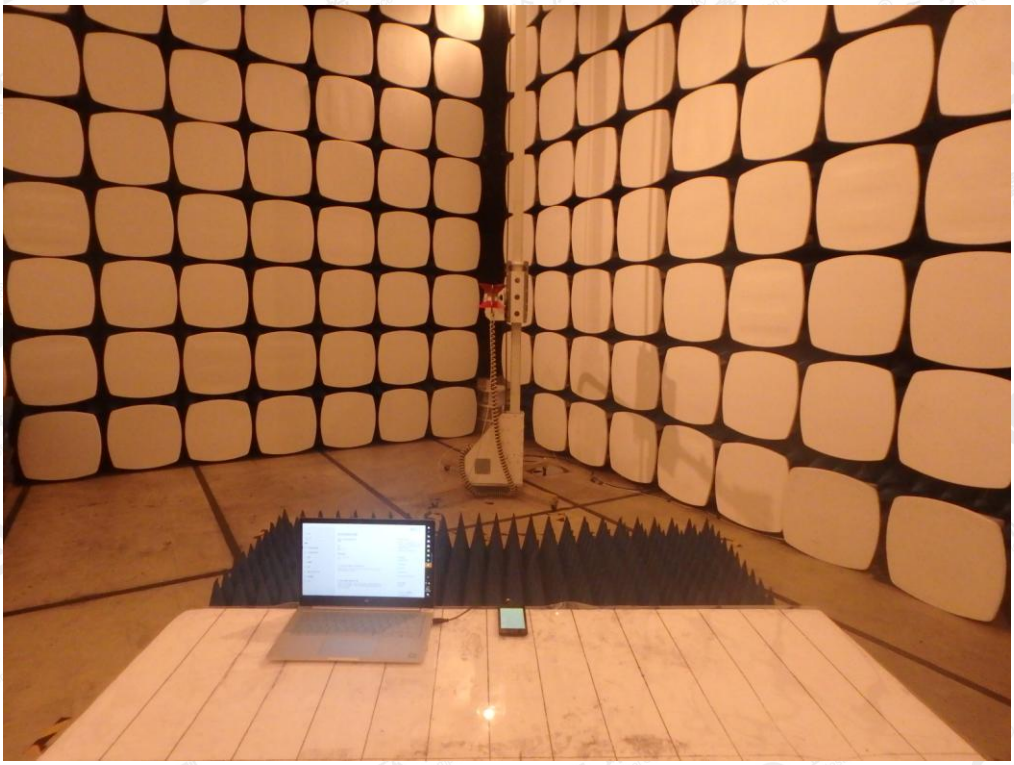

**----END OF REPORT----**

The results shown in this test report refer only to the sample(s) tested unless otherwise stated and the sample(s) are retained for 30 days only. The document is issued by AGC, this document cannot be reproduced except in full with our prior written permission. The more details and the authenticity of the report will be confirmed at http://www.agc-cert.com.