FCC Test Report

Report No.: AGC03175180502FE07

FCC ID	:	2AF6M3396993S51
APPLICATION PURPOSE	:	Original Equipment
PRODUCT DESIGNATION	:	MOBILE PHONE
BRAND NAME	:	Cellacom
MODEL NAME	:	S51_lite, S51_pro
CLIENT	:	Mobile Commodity Corporation
DATE OF ISSUE	:	June 21, 2018
STANDARD(S)	:	FCC Part 24 Rules FCC Part 27 Rules
REPORT VERSION	:	V1.0

Attestation of ***G***lobal ***C***ompliance (Shenzhen) Co., Ltd.

CAUTION:
This report shall not be reproduced except in full without the written permission of the test laboratory and shall not be quoted out of context.

The results shown in this test report refer only to the sample(s) tested unless otherwise stated and the sample(s) are retained for 30 days only. The document is issued by AGC, this document cannot be reproduced except in full with our prior written permission. The more details and the authenticity of the report will be confirmed at http://www.agc-cert.com.

REPORT REVISE RECORD

Report Version	Revise Time	Issued Date	Valid Version	Notes
V1.0	/	June 21, 2018	Valid	Original Report

The results shown in this test report refer only to the sample(s) tested unless otherwise stated and the sample(s) are retained for 30 days only. The document is issued by AGC, this document cannot be reproduced except in full with our prior written permission. The more details and the authenticity of the report will be confirmed at http://www.agc-cert.com.

TABLE OF CONTENTS

1.VERIFICATION OF COMPLIANCE 5
2. GENERAL INFORMATION 6
2.1 PRODUCT DESCRIPTION 6
2.2 RELATED SUBMITTAL(S) / GRANT (S) 7
2.3 TEST METHODOLOGY 7
2.4 TEST FACILITY 8
2.5 SPECIAL ACCESSORIES 9
2.6 EQUIPMENT MODIFICATIONS 9
3. SYSTEM TEST CONFIGURATION 10
3.1 EUT CONFIGURATION 10
3.2 EUT EXERCISE 10
3.3 GENERAL TECHNICAL REQUIREMENTS 10
3.4 CONFIGURATION OF EUT SYSTEM 11
4. SUMMARY OF TEST RESULTS 12
5. DESCRIPTION OF TEST MODES 13
6. OUTPUT POWER 14
6.1 CONDUCTED OUTPUT POWER 14
6.1.1 MEASUREMENT METHOD 14
6.2 RADIATED OUTPUT POWER 22
6.2.1 MEASUREMENT METHOD 22
6.3. PEAK-TO-AVERAGE RATIO 27
6.3.1 MEASUREMENT METHOD 27
7. SPURIOUS EMISSION 36
7.1 CONDUCTED SPURIOUS EMISSION 36
7.2 RADIATED SPURIOUS EMISSION 38
8. FREQUENCY STABILITY 42
8.1 MEASUREMENT METHOD 42
8.2 PROVISIONS APPLICABLE 43
8.3 MEASUREMENT RESULT (WORST) 44
9. OCCUPIED BANDWIDTH 45
9.1 MEASUREMENT METHOD 45
9.2 PROVISIONS APPLICABLE 45
9.3 MEASUREMENT RESULT 45
10. EMISSION BANDWIDTH 48

The results shown in this test report refer only to the sample(s) tested unless otherwise stated and the sample(s) are retained for 30 days only. The document is issued by AGC, this document cannot be reproduced except in full with our prior written permission. The more details and the authenticity of the report will be confirmed at http://www.agc-cert.com.

10.1 MEASUREMENT METHOD 48
10.2 PROVISIONS APPLICABLE 48
10.3 MEASUREMENT RESULT 48
11. BAND EDGE 51
11.1 MEASUREMENT METHOD 51
11.2 PROVISIONS APPLICABLE 51
11.3 MEASUREMENT RESULT 51
APPENDIX ATEST PLOTS FOR CONDUCTED SPURIOUS EMISSION 52
APPENDIX B TEST PLOTS FOR OCCUPIED BANDWIDTH (99%) 55
EMISSION BANDWIDTH (-26dBC) 55
APPENDIX D PHOTOGRAPHS OF TEST SETUP 62

The results shown in this test report refer only to the sample(s) tested unless otherwise stated and the sample(s) are retained for 30 days only. The document is issued by AGC, this document cannot be reproduced except in full with our prior written permission. The more details and the authenticity of the report will be confirmed at http://www.agc-cert.com.

1.VERIFICATION OF COMPLIANCE

Applicant	Mobile Commodity Corporation
Address	20955 Pathfinder Road, Suite 200, Diamond Bar, CA 91765, USA
Manufacturer	Cellacom Incorporation
Address	20955 Pathfinder Road, Suite 100, Diamond Bar, CA 91765, USA
Product Designation	MOBILE PHONE
Brand Name	Cellacom
Test Model	S51_lite
Serial Model	S51_pro
Difference Description	All the same except the model name.
Date of test	May. 28, 2018~June 19, 2018
Deviation	None
Condition of Test Sample	Normal

We hereby certify that:

The above equipment was tested by Attestation of Global Compliance(Shenzhen) Co., Ltd. The data evaluation, test procedures, and equipment configurations shown in this report were made in accordance with the procedures given in ANSI/TIA-603-E-2016. The sample tested as described in this report is in compliance with the FCC Rules Part24 and 27.

The test results of this report relate only to the tested sample identified in this report.

Tested By	Nice.xie	
	Nice Xie(Xie xiaosong)	June 21, 2018
Reviewed By	Bart xie	
	Bart Xie(Xie Xiaobin)	June 21, 2018
Approved By	Forrest Lei	
	Forrest Lei(Lei Yonggang) Authorized Officer	June 21, 2018

The results shown in this test report refer only to the sample(s) tested unless otherwise stated and the sample(s) are retained for 30 days only. The document is issued by AGC, this document cannot be reproduced except in full with our prior written permission. The more details and the authenticity of the report will be confirmed at http://www.agc-cert.com.

2. GENERAL INFORMATION

2.1 PRODUCT DESCRIPTION

A major technical description of EUT is described as following:

Radio System Type:	LTE	
Hardware version:	L71_M_V3.0	
Software version:	S51_Lite_V1.0	
Frequency Bands:	☐FDD Band 2 ☒FDD Band 4 ☐FDD Band 5 ☐FDD Band 7 ☐FDD Band 12 ☐FDD Band 25 ☐FDD Band 26 ☐TDD Band 41 (U.S. Bands) ☐FDD Band 1 ☐FDD Band 3 ☐FDD Band 7 ☐FDD Band 8 ☐FDD Band 20 ☐TDD Band 33 ☐TDD Band 34 ☐TDD Band 38 ☐FDD Band 40 ☐FDD Band 42 ☐FDD Band 43 (Non-U.S. Bands)	
	LTE Band 4	Transmission (TX): 1710 to 1754.9 MHz
		Receiving (RX): 2110 to 2154.9 MHz
	LTE Band 4	☒ 1.4 MHz ☒ 3 MHz ☒ 5 MHz ☒ 10 MHz ☒ 15 MHz ☒ 20 MHz
Antenna:	PIFA Antenna	
Type of Modulation	QPSK/16QAM	
Antenna gain:	1.17dBi (LTE band 4)	
Diversity gain	1.13dBi (LTE band 4)	
Power Supply:	DC 3.8V by battery	
Dual Card:	GSM/WCDMA/LTE Card Slot	
Power Class	3	
Extreme Vol. Limits:	DC3.4V to 4.35 V (Normal: 3.8 V)	
Temperature range	-10℃ to +50℃	
Note1: The High Voltage DC4.35V and Low Voltage DC3.4V were declared by manufacturer, The EUT couldn't be operating normally with higher or lower voltage..		

The results shown in this test report refer only to the sample(s) tested unless otherwise stated and the sample(s) are retained for 30 days only. The document is issued by AGC, this document cannot be reproduced except in full with our prior written permission. The more details and the authenticity of the report will be confirmed at http://www.agc-cert.com.

2.2 RELATED SUBMITTAL(S) / GRANT (S)

This submittal(s) (test report) is intended for **FCC ID: 2AF6M3396993S51**, filing to comply with the FCC Part 22, Part 24 and Pant 27 requirements

.

2.3 TEST METHODOLOGY

The radiated emission testing was performed according to the procedures of ANSI/TIA-603-E-2016, and FCC KDB 971168 D01 Power Means License Digital Systems v03.

The results shown in this test report refer only to the sample(s) tested unless otherwise stated and the sample(s) are retained for 30 days only. The document is issued by AGC, this document cannot be reproduced except in full with our prior written permission. The more details and the authenticity of the report will be confirmed at http://www.agc-cert.com.

2.4 TEST FACILITY

Site	Attestation of Global Compliance (Shenzhen) Co., Ltd
Location	1-2F., Bldg.2, No.1-4, ChaxiSanwei Technical Industrial Park, Gushu, Xixiang, Bao'an District B112-B113, Bldg.12, BaoanBldg Materials Center, No.1 of Xixiang Inner Ring Road, Baoan District, Shenzhen 518012
NVLAP LAB CODE	600153-0
Designation Number	CN5028
Description	Attestation of Global Compliance(Shenzhen) Co., Ltd is accredited by National Voluntary Laboratory Accreditation program, NVLAP Code 600153-0

ALL TEST EQUIPMENT LIST

Equipment	Manufacturer	Model	S/N	Cal. Date	Cal. Due
TEST RECEIVER	R&S	ESPI	101206	Jun.20, 2017	Jun.19, 2018
LISN	R&S	ESH2-Z5	100086	Aug.21, 2017	Aug.20, 2018
TEST RECEIVER	R&S	ESCI	10096	Jun.20, 2017	Jun.19, 2018
EXA Signal Analyzer	Aglient	N9010A	MY53470504	Dec.08, 2017	Dec.07, 2018
Horn antenna	SCHWARZBECK	BBHA 9170	#768	Sep.20, 2017	Sep.19, 2018
preamplifier	ChengYi	EMC184045SE	980508	Sep.15, 2017	Sep.14, 2018
Double-Ridged Waveguide Horn	ETS LINDGREN	3117	00034609	May.18, 2017	May.17, 2019
Broadband Preamplifier	SCHWARZBECK	BBV 9718	9718-205	Jun.20, 2017	Jun.19, 2018
ANTENNA	SCHWARZBECK	VULB9168	D69250	Sep.28, 2017	Sep.27, 2018
SIGNAL ANALYZER	Agilent	N9020A	MY52090123	Sep. 21, 2017	Sep. 20, 2018
USB Wideband Power Sensor	Agilent	U2021XA	MY54110007	Sep. 21, 2017	Sep. 20, 2018
Universal Radio Communication Tester	R&S	CMU200	120237	Mar.01,2018	Feb.28,2019
Universal Radio Communication Tester	Agilent	8960	GB46200384	July 16,2017	July 15,2018
Wireless communication test	R&S	CMW500	120909	July 13, 2017	July 12, 2018
Power Splitter	Agilent	11636A	34	Sep.21,2017	Sep.20,2018
Attenuator	JFW	50FHC-006-50	N/A	June 20, 2017	June 19, 2018

The results shown in this test report refer only to the sample(s) tested unless otherwise stated and the sample(s) are retained for 30 days only. The document is issued by AGC, this document cannot be reproduced except in full with our prior written permission. The more details and the authenticity of the report will be confirmed at http://www.agc-cert.com.

2.5 SPECIAL ACCESSORIES

The battery was supplied by the applicant were used as accessories and being tested with EUT intended for FCC grant together.

2.6 EQUIPMENT MODIFICATIONS

Not available for this EUT intended for grant.

The results shown in this test report refer only to the sample(s) tested unless otherwise stated and the sample(s) are retained for 30 days only. The document is issued by AGC, this document cannot be reproduced except in full with our prior written permission. The more details and the authenticity of the report will be confirmed at http://www.agc-cert.com.

3. SYSTEM TEST CONFIGURATION

3.1 EUT CONFIGURATION

The EUT configuration for testing is installed on RF field strength measurement to meet the Commission's requirement and operating in a manner which intends to maximize its emission characteristics in a continuous normal application.

3.2 EUT EXERCISE

The Transmitter was operated in the maximum output power mode through Communication Tester. The TX frequency was fixed which was for the purpose of the measurements.

3.3 GENERAL TECHNICAL REQUIREMENTS

Item Number	Item Description		FCC Rules
1	Output Power	Conducted output power	2.1046/27.50(d)/ 27.50(c)
		Radiated output power	
2	Peak-to-Average Ratio	Peak-to-Average Ratio	27.50(d)
3	Spurious Emission	Conducted spurious emission	2.1051 / 27.53(h)/ 27.53(g)
		Radiated spurious emission	
4	Frequency Stability		2.1055/27.54
5	Occupied Bandwidth		2.1049 (h)(i)
6	Band Edge		27.53(h)/ 27.53(g)

Note: Testing was performed by configuring EUT to maximum output power status, the declared output power class for different.

The results shown in this test report refer only to the sample(s) tested unless otherwise stated and the sample(s) are retained for 30 days only. The document is issued by AGC, this document cannot be reproduced except in full with our prior written permission. The more details and the authenticity of the report will be confirmed at http://www.agc-cert.com.

3.4 CONFIGURATION OF EUT SYSTEM

Fig. 2-1 Configuration of EUT System

Table 2-1 Equipment Used in EUT System

Item	Equipment	Model No.	ID or Specification	Remark
1	MOBILE PHONE	S51_lite	2AF6M3396993S51	EUT
2	Battery	S51_lite	DC 3.8V/2000mAh	Accessory
3	Earphone	N/A	N/A	Accessory

***Note: All the accessories have been used during the test. The following “EUT” in setup diagram means EUT system.

The results shown in this test report refer only to the sample(s) tested unless otherwise stated and the sample(s) are retained for 30 days only. The document is issued by AGC, this document cannot be reproduced except in full with our prior written permission. The more details and the authenticity of the report will be confirmed at http://www.agc-cert.com.

4. SUMMARY OF TEST RESULTS

Item Number	Item Description		FCC Rules	Result
1	Output Power	Conducted Output Power	2.1046/27.50(d)/ 27.50(c)	Pass
		Radiated Output Power		
2	Peak-to-Average Ratio	Peak-to-Average Ratio	27.50(d)	Pass
3	Spurious Emission	Conducted Spurious Emission	2.1051 / 27.53(h)/ 27.53(g)	Pass
		Radiated Spurious Emission		
4	Frequency Stability		2.1055/27.54	Pass
5	Occupied Bandwidth		2.1049 (h)(i)	Pass
6	Band Edge		27.53(h)/ 27.53(g)	Pass

The results shown in this test report refer only to the sample(s) tested unless otherwise stated and the sample(s) are retained for 30 days only. The document is issued by AGC, this document cannot be reproduced except in full with our prior written permission. The more details and the authenticity of the report will be confirmed at http://www.agc-cert.com.

5. DESCRIPTION OF TEST MODES

During the testing, the EUT was controlled via Rhode & Schwarz Digital Radio Communication Tester (CMW 500) to ensure max power transmission and proper modulation. Three channels (The top channel, the middle channel and the bottom channel) were chosen for testing on both LTE frequency band.
The worst condition was recorded in the test report if no other modes test data.

Test Mode	Test Modes Description
LTE	LTE system, QPSK modulation
LTE	LTE system, 16QAM modulation

Test Mode	TX / RX	RF Channel		
		Low (B)	Middle (M)	High (T)
LTE Band 4	TX (1.4M)	Channel 19957	Channel 20175	Channel 20393
		1710.7 MHz	1732.5 MHz	1754.3 MHz
	TX (3M)	Channel 19965	Channel 20175	Channel 20385
		1711.5 MHz	1732.5 MHz	1753.5 MHz
	TX (5M)	Channel 19975	Channel 20175	Channel 20375
		1712.5 MHz	1732.5 MHz	1752.5 MHz
	TX (10M)	Channel 20000	Channel 20175	Channel 20350
		1715 MHz	1732.5 MHz	1750 MHz
	TX (15M)	Channel 20025	Channel 20175	Channel 20325
		1717.5 MHz	1732.5 MHz	1747.5 MHz
	TX (20M)	Channel 20050	Channel 20175	Channel 20300
		1720 MHz	1732.5 MHz	1745 MHz
	RX (1.4M)	Channel 1957	Channel 2175	Channel 2393
		2110.7 MHz	2132.5 MHz	2154.3 MHz
	RX (3M)	Channel 1965	Channel 2175	Channel 2385
		2111.5 MHz	2132.5 MHz	2153.5 MHz
	RX (5M)	Channel 1975	Channel 2175	Channel 2375
		2112.5 MHz	2132.5 MHz	2152.5 MHz
	RX (10M)	Channel 2000	Channel 2175	Channel 2350
		2115 MHz	2132.5 MHz	2150 MHz
	RX (15M)	Channel 2025	Channel 2175	Channel 2325
		2117.5 MHz	2132.5 MHz	2147.5 MHz
	RX (20M)	Channel 2050	Channel 2175	Channel 2300
		2120 MHz	2132.5 MHz	2145 MHz

The results shown in this test report refer only to the sample(s) tested unless otherwise stated and the sample(s) are retained for 30 days only. The document is issued by AGC, this document cannot be reproduced except in full with our prior written permission. The more details and the authenticity of the report will be confirmed at http://www.agc-cert.com.

6. OUTPUT POWER

6.1 CONDUCTED OUTPUT POWER

6.1.1 MEASUREMENT METHOD

The EUT is coupled to the SS with attenuator through power splitter; the RF load attached to EUT antenna terminal is 50ohm, the path loss as the factor is calibrated to correct the reading. A system simulator was used to establish communication with the EUT , Its parameters were set to force the EUT transmitting at maximum output power. The measured power in the radio frequency on the transmitter output terminals shall be reported. The measurements were performed on all modes at 3 typical channels (the Top Channel, the Middle Channel and the Bottom Channel) for each band.

6.1.2 MEASUREMENT RESULT

Conducted Output Power Limits		
Mode	**Average Power**	**Tolerance(dB)**
LTE	23 dBm (0.2W)	± 2.7

The results shown in this test report refer only to the sample(s) tested unless otherwise stated and the sample(s) are retained for 30 days only. The document is issued by AGC, this document cannot be reproduced except in full with our prior written permission. The more details and the authenticity of the report will be confirmed at http://www.agc-cert.com.

LTE Band 4

BW (MHz)	Ch	Freq. (MHz)	Mode	UL RB Allocation	UL RB Offset	MPR	Average power (dBm)
20MHz	20050	1720.0	QPSK	1	0	0	22.72
				1	49	0	22.30
				1	99	0	22.08
				50	0	1	21.15
				50	25	1	21.62
				50	49	1	21.32
				100	0	1	21.29
			16QAM	1	0	1	21.37
				1	49	1	21.18
				1	99	1	21.24
				50	0	2	20.11
				50	25	2	20.15
				50	49	2	20.23
				100	0	2	20.22
	20175	1732.5	QPSK	1	0	0	22.96
				1	49	0	21.96
				1	99	0	21.07
				50	0	1	20.11
				50	25	1	20.14
				50	49	1	20.37
				100	0	1	20.93
			16QAM	1	0	1	21.50
				1	49	1	20.56
				1	99	1	20.26
				50	0	2	19.56
				50	25	2	19.47
				50	49	2	19.31
				100	0	2	19.86
	20300	1745.0	QPSK	1	0	0	22.37
				1	49	0	22.15
				1	99	0	22.30
				50	0	1	20.59
				50	25	1	20.18
				50	49	1	20.71
				100	0	1	20.55
			16QAM	1	0	1	21.03
				1	49	1	21.56
				1	99	1	21.66
				50	0	2	19.58
				50	25	2	19.47
				50	49	2	19.72
				100	0	2	19.51

The results shown in this test report refer only to the sample(s) tested unless otherwise stated and the sample(s) are retained for 30 days only. The document is issued by AGC, this document cannot be reproduced except in full with our prior written permission. The more details and the authenticity of the report will be confirmed at http://www.agc-cert.com.

BW (MHz)	Ch	Freq. (MHz)	Mode	UL RB Allocation	UL RB Offset	MPR	Average power (dBm)
15MHz	20025	1717.5	QPSK	1	0	0	22.08
				1	37	0	22.19
				1	74	0	22.23
				36	0	1	21.25
				36	16	1	21.53
				36	35	1	21.32
				75	0	1	21.25
			16QAM	1	0	1	21.34
				1	37	1	21.41
				1	74	1	21.53
				36	0	2	20.20
				36	16	2	20.19
				36	35	2	20.24
				75	0	2	20.19
	20175	1732.5	QPSK	1	0	0	22.28
				1	37	0	22.56
				1	74	0	21.21
				36	0	1	20.15
				36	16	1	20.57
				36	35	1	20.56
				75	0	1	21.00
			16QAM	1	0	1	21.58
				1	37	1	21.47
				1	74	1	20.55
				36	0	2	19.69
				36	16	2	19.87
				36	35	2	19.53
				75	0	2	19.95
	20325	1747.5	QPSK	1	0	0	21.65
				1	37	0	21.52
				1	74	0	22.42
				36	0	1	20.88
				36	16	1	20.79
				36	35	1	20.96
				75	0	1	20.67
			16QAM	1	0	1	20.80
				1	37	1	20.49
				1	74	1	21.70
				36	0	2	19.96
				36	16	2	19.88
				36	35	2	19.96
				75	0	2	19.64

The results shown in this test report refer only to the sample(s) tested unless otherwise stated and the sample(s) are retained for 30 days only. The document is issued by AGC, this document cannot be reproduced except in full with our prior written permission. The more details and the authenticity of the report will be confirmed at http://www.agc-cert.com.

BW (MHz)	Ch	Freq. (MHz)	Mode	UL RB Allocation	UL RB Offset	MPR	Average power (dBm)
10MHz	20000	1715.0	QPSK	1	0	0	21.88
				1	24	0	21.93
				1	49	0	22.05
				25	0	1	21.53
				25	12	1	21.34
				25	25	1	21.29
				50	0	1	21.20
			16QAM	1	0	1	21.11
				1	24	1	21.42
				1	49	1	21.39
				25	0	2	20.21
				25	12	2	20.19
				25	25	2	20.24
				50	0	2	20.15
	20175	1732.5	QPSK	1	0	0	22.36
				1	24	0	22.25
				1	49	0	21.19
				25	0	1	20.48
				25	12	1	20.69
				25	25	1	20.71
				50	0	1	21.04
			16QAM	1	0	1	21.69
				1	24	1	20.77
				1	49	1	20.51
				25	0	2	19.67
				25	12	2	19.58
				25	25	2	19.69
				50	0	2	19.98
	20350	1750.0	QPSK	1	0	0	21.59
				1	24	0	22.20
				1	49	0	22.32
				25	0	1	21.25
				25	12	1	21.23
				25	25	1	21.27
				50	0	1	20.93
			16QAM	1	0	1	20.85
				1	24	1	20.16
				1	49	1	21.71
				25	0	2	20.26
				25	12	2	20.18
				25	25	2	20.21
				50	0	2	19.94

The results shown in this test report refer only to the sample(s) tested unless otherwise stated and the sample(s) are retained for 30 days only. The document is issued by AGC, this document cannot be reproduced except in full with our prior written permission. The more details and the authenticity of the report will be confirmed at http://www.agc-cert.com.

BW (MHz)	Ch	Freq. (MHz)	Mode	UL RB Allocation	UL RB Offset	MPR	Average power (dBm)
5MHz	19975	1712.5	QPSK	1	0	0	22.51
				1	12	0	22.47
				1	24	0	22.35
				12	0	1	21.36
				12	6	1	21.55
				12	11	1	21.41
				25	0	1	21.24
			16QAM	1	0	1	21.82
				1	12	1	21.58
				1	24	1	21.74
				12	0	2	20.12
				12	6	2	20.32
				12	11	2	20.51
				25	0	2	20.22
	20175	1732.5	QPSK	1	0	0	22.49
				1	12	0	22.41
				1	24	0	22.24
				12	0	1	21.02
				12	6	1	21.06
				12	11	1	21.11
				25	0	1	21.19
			16QAM	1	0	1	21.90
				1	12	1	21.59
				1	24	1	21.71
				12	0	2	20.18
				12	6	2	20.15
				12	11	2	20.22
				25	0	2	20.14
	20375	1752.5	QPSK	1	0	0	22.41
				1	12	0	22.43
				1	24	0	22.47
				12	0	1	21.45
				12	6	1	21.44
				12	11	1	21.50
				25	0	1	21.44
			16QAM	1	0	1	21.40
				1	12	1	21.61
				1	24	1	21.41
				12	0	2	20.41
				12	6	2	20.16
				12	11	2	20.53
				25	0	2	20.40

The results shown in this test report refer only to the sample(s) tested unless otherwise stated and the sample(s) are retained for 30 days only. The document is issued by AGC, this document cannot be reproduced except in full with our prior written permission. The more details and the authenticity of the report will be confirmed at http://www.agc-cert.com.

BW (MHz)	Ch	Freq. (MHz)	Mode	UL RB Allocation	UL RB Offset	MPR	Average power (dBm)
3MHz	19965	1711.5	QPSK	1	0	0	22.47
				1	7	0	22.54
				1	14	0	22.37
				8	0	1	21.06
				8	4	1	21.11
				8	7	1	21.60
				15	0	1	21.60
			16QAM	1	0	1	21.75
				1	7	1	21.53
				1	14	1	21.66
				8	0	2	20.34
				8	4	2	20.19
				8	7	2	20.60
				15	0	2	20.53
	20175	1732.5	QPSK	1	0	0	22.37
				1	7	0	22.15
				1	14	0	22.45
				8	0	1	21.52
				8	4	1	21.44
				8	7	1	21.60
				15	0	1	21.55
			16QAM	1	0	1	21.67
				1	7	1	21.50
				1	14	1	21.73
				8	0	2	20.58
				8	4	2	20.17
				8	7	2	20.63
				15	0	2	20.53
	20385	1753.5	QPSK	1	0	0	22.32
				1	7	0	22.08
				1	14	0	22.36
				8	0	1	21.39
				8	4	1	21.43
				8	7	1	21.48
				15	0	1	21.43
			16QAM	1	0	1	21.65
				1	7	1	21.55
				1	14	1	21.68
				8	0	2	20.22
				8	4	2	20.18
				8	7	2	20.47
				15	0	2	20.40

The results shown in this test report refer only to the sample(s) tested unless otherwise stated and the sample(s) are retained for 30 days only. The document is issued by AGC, this document cannot be reproduced except in full with our prior written permission. The more details and the authenticity of the report will be confirmed at http://www.agc-cert.com.

BW (MHz)	Ch	Freq. (MHz)	Mode	UL RB Allocation	UL RB Offset	MPR	Average power (dBm)
1.4MHz	19957	1710.7	QPSK	1	0	0	23.14
				1	2	0	23.13
				1	5	0	23.09
				3	0	0	22.81
				3	1	0	22.74
				3	2	0	22.98
				6	0	1	21.97
			16QAM	1	0	1	22.27
				1	2	1	22.24
				1	5	1	22.28
				3	0	1	22.12
				3	1	1	22.15
				3	2	1	22.01
				6	0	2	20.86
	20175	1732.5	QPSK	1	0	0	22.94
				1	2	0	22.75
				1	5	0	22.81
				3	0	0	22.35
				3	1	0	22.29
				3	2	0	22.78
				6	0	1	21.71
			16QAM	1	0	1	22.26
				1	2	1	22.16
				1	5	1	22.20
				3	0	1	21.54
				3	1	1	21.49
				3	2	1	21.64
				6	0	2	20.69
	20393	1754.3	QPSK	1	0	0	22.86
				1	2	0	22.69
				1	5	0	22.38
				3	0	0	22.33
				3	1	0	22.37
				3	2	0	22.41
				6	0	1	21.46
			16QAM	1	0	1	21.59
				1	2	1	21.62
				1	5	1	21.60
				3	0	1	21.32
				3	1	1	21.28
				3	2	1	21.46
				6	0	2	20.58

The results shown in this test report refer only to the sample(s) tested unless otherwise stated and the sample(s) are retained for 30 days only. The document is issued by AGC, this document cannot be reproduced except in full with our prior written permission. The more details and the authenticity of the report will be confirmed at http://www.agc-cert.com.

According to 3GPP 36.521 sub-clause 6.2.3.3, the maximum output power is allowed to be reduced by following the table.

Table 6.2.3.3-1: Maximum Power Reduction (MPR) for Power Class 3

Modulation	Channel bandwidth / Transmission bandwidth configuration [RB]						MPR (dB)
	1.4 MHz	3.0 MHz	5 MHz	10 MHz	15 MHz	20 MHz	
QPSK	> 5	> 4	> 8	> 12	> 16	> 18	≤ 1
16 QAM	≤ 5	≤ 4	≤ 8	≤ 12	≤ 16	≤ 18	≤ 1
16 QAM	> 5	> 4	> 8	> 12	> 16	> 18	≤ 2

The device supports MPR to solve linearity issues (ACLR or SEM) due to the higher peak-to average ratios (PAR) of the HSUPA signal. This prevents saturating the full range of the TX DAC inside of device and provides a reduced power output to the RF transceiver chip according to the Cubic Metric (For PRACH, PUCCH and SRS transmission, the allowed MPR is according to that specified for PUSCH QPSK modulation for the corresponding transmission bandwidth.).

When PRACH, PUCCH are present the beta gains on those channels are reduced firsts to try to get the power under the allowed limit. If the beta gains are lowered as far as possible, then a hard limiting is applied at the maximum allowed level.

For each subframe, the MPR is evaluated per slot and given by the maximum value taken over the transmission(s) within the slot, the maximum MPR over the two slots is then applied for the entire subframe.

For the UE maximum output power modified by MPR, the power limits specified in subclause 6.2.5.3 apply. The normative reference for this requirement is TS 36.101 clause 6.2.3.

The end effect is that the DUT output power is identical to the case where there is no MPR in the device.

The results shown in this test report refer only to the sample(s) tested unless otherwise stated and the sample(s) are retained for 30 days only. The document is issued by AGC, this document cannot be reproduced except in full with our prior written permission. The more details and the authenticity of the report will be confirmed at http://www.agc-cert.com.

6.2 RADIATED OUTPUT POWER

6.2.1 MEASUREMENT METHOD

The measurements procedures specified in ANSI/TIA-603-E-2016 were applied.

1 In an anechoic antenna test chamber, a half-wave dipole antenna for the frequency band of interest is placed at the reference centre of the chamber. An RF Signal source for the frequency band of interest is connected to the dipole with a cable that has been constructed to not interfere with the radiation pattern of the antenna. A known (measured) power (Pin) is applied to the input of the dipole, and the power received (Pr) at the chamber's probe antenna is recorded.

2 The substitution method is used. Substitution values at each frequency are measured before and saved to the test software. A "reference path loss" is established as ARpl=Pin + 2.15 - Pr. The ARpl is the attenuation of “reference path loss”, and including the gain of receive antenna, the cable loss and the air loss. The measurement results are obtained as described below: Power=PMea+ARpl

3 The EUT is substituted for the dipole at the reference centre of the chamber and a scan is performed to obtain the radiation pattern.

4 From the radiation pattern, the co-ordinates where the maximum antenna gain occurs are identified.

5 The EUT is then put into continuously transmitting mode at its maximum power level.

6 Power mode measurements are performed with the receiving antenna placed at the coordinates determined in Step 3 to determine the output power as defined in Rule 27.50(d)(4). The "reference path loss" from Step1 is added to this result.

7 This value is EIRP since the measurement is calibrated using a half-wave dipole antenna of known gain (2.15 dBi) and known input power (Pin).

8 ERP can be calculated from EIRP by subtracting the gain of the dipole, ERP = EIRP -2.15dBi..

Test Setup

NOTE: Effective radiated power (ERP) refers to the radiation power output of the EUT, assuming all emissions are radiated from half-wave dipole antennas.

The results shown in this test report refer only to the sample(s) tested unless otherwise stated and the sample(s) are retained for 30 days only. The document is issued by AGC, this document cannot be reproduced except in full with our prior written permission. The more details and the authenticity of the report will be confirmed at http://www.agc-cert.com.

Step 1: Pre-test

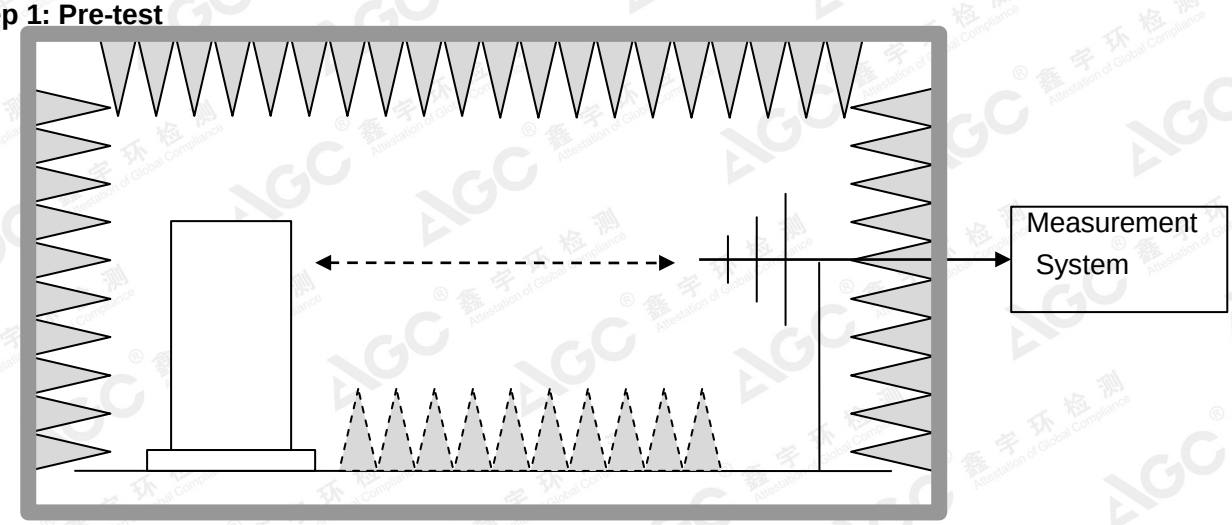

Step 2: Substitution method to verify the maximum ERP

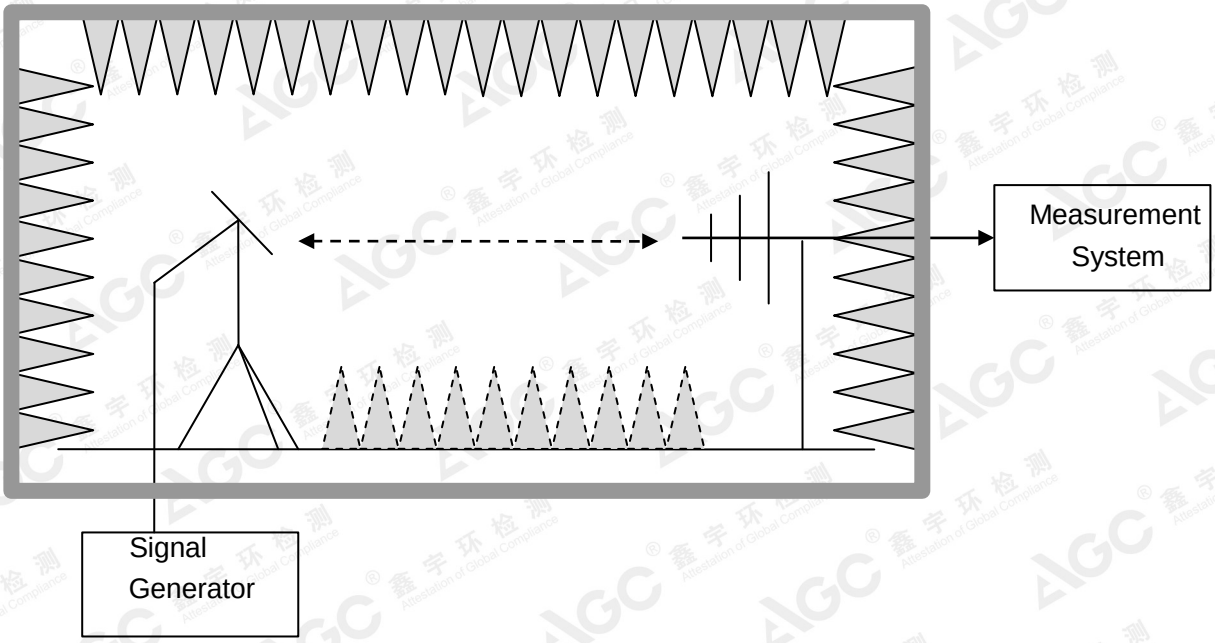

The results shown in this test report refer only to the sample(s) tested unless otherwise stated and the sample(s) are retained for 30 days only. The document is issued by AGC, this document cannot be reproduced except in full with our prior written permission. The more details and the authenticity of the report will be confirmed at http://www.agc-cert.com.

6.2.2 PROVISIONS APPLICABLE

This is the test for the maximum radiated power from the EUT. Rule Part 24.232(c) specifies, “Mobile/portable stations are limited to 2 watts e.i.r.p.

Mode	Nominal Peak Power
LTE Band 4	<=30dBm (1W)

The results shown in this test report refer only to the sample(s) tested unless otherwise stated and the sample(s) are retained for 30 days only. The document is issued by AGC, this document cannot be reproduced except in full with our prior written permission. The more details and the authenticity of the report will be confirmed at http://www.agc-cert.com.

6.2.3 MEASUREMENT RESULT

EIRP for LTE Band 4

Frequency	Channel Bandwidth	Mode.	RB	Substituted level	Antenna Polarization	Antenna Gain correction	Cable Loss	Absolute Level	Limit (dBm)
1710.7	1.4	QPSK	1/0	19.96	V	7.95	0.79	27.12	30
1732.5	1.4	QPSK	1/0	19.78	V	7.95	0.79	26.94	30
1754.3	1.4	QPSK	1/0	20.14	V	7.95	0.79	27.30	30
1710.7	1.4	QPSK	1/0	19.32	H	7.95	0.79	26.48	30
1732.5	1.4	QPSK	1/0	18.39	H	7.95	0.79	25.55	30
1754.3	1.4	QPSK	1/0	18.10	H	7.95	0.79	25.26	30
1710.7	1.4	16-QAM	1/5	19.05	V	7.95	0.79	26.21	30
1732.5	1.4	16-QAM	1/0	20.53	V	7.95	0.79	27.69	30
1754.3	1.4	16-QAM	1/0	17.84	V	7.95	0.79	25.00	30
1710.7	1.4	16-QAM	1/5	17.94	H	7.95	0.79	25.10	30
1732.5	1.4	16-QAM	1/0	18.56	H	7.95	0.79	25.72	30
1754.3	1.4	16-QAM	1/0	19.74	H	7.95	0.79	26.90	30
1711.5	3	QPSK	1/0	17.28	V	7.95	0.79	24.44	30
1732.5	3	QPSK	1/0	18.10	V	7.95	0.79	25.26	30
1753.5	3	QPSK	1/0	20.72	V	7.95	0.79	27.88	30
1711.5	3	QPSK	1/0	18.43	H	7.95	0.79	25.59	30
1732.5	3	QPSK	1/0	18.36	H	7.95	0.79	25.52	30
1753.5	3	QPSK	1/0	16.79	H	7.95	0.79	23.95	30
1711.5	3	16-QAM	1/0	18.39	V	7.95	0.79	25.55	30
1732.5	3	16-QAM	1/0	18.27	V	7.95	0.79	25.43	30
1753.5	3	16-QAM	1/0	19.14	V	7.95	0.79	26.30	30
1711.5	3	16-QAM	1/0	18.57	H	7.95	0.79	25.73	30
1732.5	3	16-QAM	1/0	21.62	H	7.95	0.79	28.78	30
1753.5	3	16-QAM	1/0	19.76	H	7.95	0.79	26.92	30
1712.5	5	QPSK	1/0	19.23	V	7.95	0.79	26.39	30
1732.5	5	QPSK	1/0	20.87	V	7.95	0.79	28.03	30
1752.5	5	QPSK	1/24	18.41	V	7.95	0.79	25.57	30
1712.5	5	QPSK	1/0	20.12	H	7.95	0.79	27.28	30
1732.5	5	QPSK	1/0	17.71	H	7.95	0.79	24.87	30
1752.5	5	QPSK	1/24	18.12	H	7.95	0.79	25.28	30
1712.5	5	16-QAM	1/0	18.61	V	7.95	0.79	25.77	30
1732.5	5	16-QAM	1/0	16.70	V	7.95	0.79	23.86	30
1752.5	5	16-QAM	1/24	16.78	V	7.95	0.79	23.94	30
1712.5	5	16-QAM	1/0	17.67	H	7.95	0.79	24.83	30
1732.5	5	16-QAM	1/0	15.96	H	7.95	0.79	23.12	30

The results shown in this test report refer only to the sample(s) tested unless otherwise stated and the sample(s) are retained for 30 days only. The document is issued by AGC, this document cannot be reproduced except in full with our prior written permission. The more details and the authenticity of the report will be confirmed at http://www.agc-cert.com.

1752.5	5	16-QAM	1/24	18.33	H	7.95	0.79	25.49	30
1715	10	QPSK	1/0	19.25	V	7.95	0.79	26.41	30
1732.5	10	QPSK	1/49	16.56	V	7.95	0.79	23.72	30
1750	10	QPSK	1/0	16.87	V	7.95	0.79	24.03	30
1715	10	QPSK	1/0	18.94	H	7.95	0.79	26.10	30
1732.5	10	QPSK	1/49	18.69	H	7.95	0.79	25.85	30
1750	10	QPSK	1/0	18.12	H	7.95	0.79	25.28	30
1715	10	16-QAM	1/0	18.86	V	7.95	0.79	26.02	30
1732.5	10	16-QAM	1/49	17.78	V	7.95	0.79	24.94	30
1750	10	16-QAM	1/0	17.19	V	7.95	0.79	24.35	30
1715	10	16-QAM	1/0	18.34	H	7.95	0.79	25.5	30
1732.5	10	16-QAM	1/49	18.86	H	7.95	0.79	26.02	30
1750	10	16-QAM	1/0	19.26	H	7.95	0.79	26.42	30
1717.5	15	QPSK	1/0	11.14	V	7.95	0.79	18.30	30
1732.5	15	QPSK	1/74	11.24	V	7.95	0.79	18.40	30
1747.5	15	QPSK	1/0	9.59	V	7.95	0.79	16.75	30
1717.5	15	QPSK	1/0	11.49	H	7.95	0.79	18.65	30
1732.5	15	QPSK	1/74	11.56	H	7.95	0.79	18.72	30
1747.5	15	QPSK	1/0	11.10	H	7.95	0.79	18.26	30
1717.5	15	16-QAM	1/0	12.02	V	7.95	0.79	19.18	30
1732.5	15	16-QAM	1/74	9.65	V	7.95	0.79	16.81	30
1747.5	15	16-QAM	1/0	11.17	V	7.95	0.79	18.33	30
1717.5	15	16-QAM	1/0	8.94	H	7.95	0.79	16.10	30
1732.5	15	16-QAM	1/74	11.54	H	7.95	0.79	18.70	30
1747.5	15	16-QAM	1/0	10.84	H	7.95	0.79	18.00	30
1720	20	QPSK	1/99	10.90	V	7.95	0.79	18.06	30
1732.5	20	QPSK	1/99	11.69	V	7.95	0.79	18.85	30
1745	20	QPSK	1/0	12.07	V	7.95	0.79	19.23	30
1720	20	QPSK	1/99	10.53	H	7.95	0.79	17.69	30
1732.5	20	QPSK	1/99	10.89	H	7.95	0.79	18.05	30
1745	20	QPSK	1/0	12.37	H	7.95	0.79	19.53	30
1720	20	16-QAM	1/99	10.02	V	7.95	0.79	17.18	30
1732.5	20	16-QAM	1/99	11.12	V	7.95	0.79	18.28	30
1745	20	16-QAM	1/0	10.57	V	7.95	0.79	17.73	30
1720	20	16-QAM	1/99	12.05	H	7.95	0.79	19.21	30
1732.5	20	16-QAM	1/99	10.30	H	7.95	0.79	17.46	30
1745	20	16-QAM	1/0	11.14	H	7.95	0.79	18.30	30

Note: Above is the worst mode data.

The results shown in this test report refer only to the sample(s) tested unless otherwise stated and the sample(s) are retained for 30 days only. The document is issued by AGC, this document cannot be reproduced except in full with our prior written permission. The more details and the authenticity of the report will be confirmed at http://www.agc-cert.com.

6.3. PEAK-TO-AVERAGE RATIO

6.3.1 MEASUREMENT METHOD

The peak-to-average power ratio (PAPR) of the transmitter output power must not exceed 13 dB. The PAPR measurements should be made using either an instrument with complementary cumulative distribution function (CCDF) capabilities to determine that PAPR will not exceed 13 dB for more than 0.1 percent of the time or other Commission approved procedure. The measurement must be performed using a signal corresponding to the highest PAPR expected during periods of continuous transmission.

According to KDB 971168 D01v03 - Section 5.7:

a)Refer to instrument’s analyzer instruction manual for details on how to use the power statistics /CCDF function;

b) Set resolution/measurement bandwidth ≥ signal’s occupied bandwidth;

c) Set the number of counts to a value that stabilizes the measured CCDF curve;

d) Set the measurement interval to 1 ms

e) Record the maximum PAPR level associated with a probability of 0.1%

6.3.2 PROVISIONS APPLICABLE

This is the test for the Peak-to-Average Ratio from the EUT.

Power Complementary Cumulative Distribution Function (CCDF) curves provide a means for characterizing the power peaks of a digitally modulated signal on a statistical basis. A CCDF curve depicts the probability of the peak signal amplitude exceeding the average power level. Most contemporary measurement instrumentation include the capability to produce CCDF curves for an input signal provided that the instrument’s resolution bandwidth can be set wide enough to accommodate the entire input signal bandwidth. In measuring transmissions in this band using an average power technique, the peak-to-average ratio (PAR) of the transmission may not exceed 13 dB.

The results shown in this test report refer only to the sample(s) tested unless otherwise stated and the sample(s) are retained for 30 days only. The document is issued by AGC, this document cannot be reproduced except in full with our prior written permission. The more details and the authenticity of the report will be confirmed at http://www.agc-cert.com.

6.3.3 MEASUREMENT RESULT

LTE Band 4
Channel Bandwidth: 1.4 MHz

Channel Bandwidth: 1.4 MHz						
Modulation	Channel	RB Configuration		Peak-to-Average Ratio (dB)	Limit (dB)	Verdict
		Size	Offset			
QPSK	LCH	1	0	3.60	<13	PASS
		1	3	3.48	<13	PASS
		1	5	3.88	<13	PASS
		3	0	3.59	<13	PASS
		3	2	3.45	<13	PASS
		3	3	3.99	<13	PASS
		6	0	4.90	<13	PASS
	MCH	1	0	3.85	<13	PASS
		1	3	4.11	<13	PASS
		1	5	4.07	<13	PASS
		3	0	4.06	<13	PASS
		3	2	4.08	<13	PASS
		3	3	4.14	<13	PASS
		6	0	4.74	<13	PASS
	HCH	1	0	3.71	<13	PASS
		1	3	3.54	<13	PASS
		1	5	3.68	<13	PASS
		3	0	3.45	<13	PASS
		3	2	3.46	<13	PASS
		3	3	3.81	<13	PASS
		6	0	4.59	<13	PASS
16QAM	LCH	1	0	4.67	<13	PASS
		1	3	4.26	<13	PASS
		1	5	4.81	<13	PASS
		3	0	4.58	<13	PASS
		3	2	4.66	<13	PASS
		3	3	4.94	<13	PASS
		6	0	5.73	<13	PASS
	MCH	1	0	4.92	<13	PASS
		1	3	4.32	<13	PASS
		1	5	4.85	<13	PASS
		3	0	5.01	<13	PASS
		3	2	4.58	<13	PASS

The results shown in this test report refer only to the sample(s) tested unless otherwise stated and the sample(s) are retained for 30 days only. The document is issued by AGC, this document cannot be reproduced except in full with our prior written permission. The more details and the authenticity of the report will be confirmed at http://www.agc-cert.com.

		3	3	5.02	<13	PASS
		6	0	5.82	<13	PASS
	HCH	1	0	4.59	<13	PASS
		1	3	4.26	<13	PASS
		1	5	4.61	<13	PASS
		3	0	4.33	<13	PASS
		3	2	4.25	<13	PASS
		3	3	4.52	<13	PASS
		6	0	5.44	<13	PASS

Channel Bandwidth: 3 MHz

Channel Bandwidth: 3 MHz						
Modulation	Channel	RB Configuration		Peak-to-Average Ratio [dB]	Limit [dB]	Verdict
		Size	Offset			
QPSK	LCH	1	0	3.66	<13	PASS
		1	7	3.56	<13	PASS
		1	14	3.82	<13	PASS
		8	0	4.25	<13	PASS
		8	4	4.33	<13	PASS
		8	7	4.82	<13	PASS
		15	0	4.83	<13	PASS
	MCH	1	0	3.88	<13	PASS
		1	7	4.02	<13	PASS
		1	14	4.04	<13	PASS
		8	0	4.51	<13	PASS
		8	4	4.17	<13	PASS
		8	7	4.84	<13	PASS
		15	0	4.84	<13	PASS
	HCH	1	0	3.64	<13	PASS
		1	7	3.52	<13	PASS
		1	14	3.58	<13	PASS
		8	0	4.44	<13	PASS
		8	4	4.28	<13	PASS
		8	7	4.52	<13	PASS
		15	0	4.61	<13	PASS
16QAM	LCH	1	0	4.64	<13	PASS
		1	7	4.28	<13	PASS
		1	14	4.74	<13	PASS
		8	0	4.69	<13	PASS

The results shown in this test report refer only to the sample(s) tested unless otherwise stated and the sample(s) are retained for 30 days only. The document is issued by AGC, this document cannot be reproduced except in full with our prior written permission. The more details and the authenticity of the report will be confirmed at http://www.agc-cert.com.

		8	4	4.58	<13	PASS
		8	7	5.54	<13	PASS
		15	0	5.74	<13	PASS
	MCH	1	0	4.85	<13	PASS
		1	7	4.28	<13	PASS
		1	14	4.87	<13	PASS
		8	0	5.13	<13	PASS
		8	4	5.69	<13	PASS
		8	7	5.66	<13	PASS
		15	0	5.74	<13	PASS
	HCH	1	0	4.50	<13	PASS
		1	7	4.32	<13	PASS
		1	14	4.64	<13	PASS
		8	0	5.15	<13	PASS
		8	4	5.19	<13	PASS
		8	7	5.35	<13	PASS
		15	0	5.48	<13	PASS

Channel Bandwidth: 5 MHz

Channel Bandwidth: 5 MHz						
Modulation	Channel	RB Configuration		Peak-to-Average Ratio [dB]	Limit [dB]	Verdict
		Size	Offset			
QPSK	LCH	1	0	3.91	<13	PASS
		1	12	3.96	<13	PASS
		1	24	3.67	<13	PASS
		12	0	5.11	<13	PASS
		12	6	5.08	<13	PASS
		12	13	5.09	<13	PASS
		25	0	5.23	<13	PASS
	MCH	1	0	3.67	<13	PASS
		1	12	3.52	<13	PASS
		1	24	3.98	<13	PASS
		12	0	3.53	<13	PASS
		12	6	4.15	<13	PASS
		12	13	5.07	<13	PASS
		25	0	5.22	<13	PASS
	HCH	1	0	3.74	<13	PASS
		1	12	3.53	<13	PASS
		1	24	3.56	<13	PASS

The results shown in this test report refer only to the sample(s) tested unless otherwise stated and the sample(s) are retained for 30 days only. The document is issued by AGC, this document cannot be reproduced except in full with our prior written permission. The more details and the authenticity of the report will be confirmed at http://www.agc-cert.com.

		12	0	4.25	<13	PASS
		12	6	4.36	<13	PASS
		12	13	4.47	<13	PASS
		25	0	4.81	<13	PASS
16QAM	LCH	1	0	4.79	<13	PASS
		1	12	4.56	<13	PASS
		1	24	4.88	<13	PASS
		12	0	5.16	<13	PASS
		12	6	5.29	<13	PASS
		12	13	5.95	<13	PASS
		25	0	6.10	<13	PASS
	MCH	1	0	4.72	<13	PASS
		1	12	4.56	<13	PASS
		1	24	4.74	<13	PASS
		12	0	4.28	<13	PASS
		12	6	4.25	<13	PASS
		12	13	5.93	<13	PASS
		25	0	6.00	<13	PASS
	HCH	1	0	4.69	<13	PASS
		1	12	4.56	<13	PASS
		1	24	4.14	<13	PASS
		12	0	5.24	<13	PASS
		12	6	5.64	<13	PASS
		12	13	5.47	<13	PASS
		25	0	5.69	<13	PASS

Channel Bandwidth: 10 MHz

Channel Bandwidth: 20 MHz						
Modulation	Channel	RB Configuration		Peak-to-Average Ratio [dB]	Limit [dB]	Verdict
		Size	Offset			
QPSK	LCH	1	0	4.26	<13	PASS
		1	49	4.35	<13	PASS
		1	99	4.22	<13	PASS
		50	0	4.59	<13	PASS
		50	25	4.66	<13	PASS
		50	50	4.93	<13	PASS
		100	0	5.04	<13	PASS
	MCH	1	0	4.14	<13	PASS
		1	49	4.79	<13	PASS

The results shown in this test report refer only to the sample(s) tested unless otherwise stated and the sample(s) are retained for 30 days only. The document is issued by AGC, this document cannot be reproduced except in full with our prior written permission. The more details and the authenticity of the report will be confirmed at http://www.agc-cert.com.

		1	99	4.84	<13	PASS
		50	0	5.13	<13	PASS
		50	25	5.11	<13	PASS
		50	50	5.21	<13	PASS
		100	0	5.03	<13	PASS
	HCH	1	0	4.33	<13	PASS
		1	49	4.03	<13	PASS
		1	99	3.84	<13	PASS
		50	0	4.69	<13	PASS
		50	25	4.52	<13	PASS
		50	50	4.75	<13	PASS
		100	0	4.94	<13	PASS
16QAM	LCH	1	0	5.32	<13	PASS
		1	49	5.21	<13	PASS
		1	99	5.04	<13	PASS
		50	0	5.49	<13	PASS
		50	25	5.77	<13	PASS
		50	50	5.81	<13	PASS
		100	0	5.88	<13	PASS
	MCH	1	0	4.93	<13	PASS
		1	49	4.86	<13	PASS
		1	99	5.46	<13	PASS
		50	0	5.46	<13	PASS
		50	25	5.48	<13	PASS
		50	50	6.06	<13	PASS
		100	0	5.91	<13	PASS
	HCH	1	0	5.57	<13	PASS
		1	49	5.39	<13	PASS
		1	99	4.79	<13	PASS
		50	0	5.36	<13	PASS
		50	25	5.46	<13	PASS
		50	50	5.65	<13	PASS
		100	0	5.81	<13	PASS

The results shown in this test report refer only to the sample(s) tested unless otherwise stated and the sample(s) are retained for 30 days only. The document is issued by AGC, this document cannot be reproduced except in full with our prior written permission. The more details and the authenticity of the report will be confirmed at http://www.agc-cert.com.

Channel Bandwidth: 15 MHz

Channel Bandwidth: 15 MHz						
Modulation	Channel	RB Configuration		Peak-to-Average Ratio [dB]	Limit [dB]	Verdict
		Size	Offset			
QPSK	LCH	1	0	4.04	<13	PASS
		1	37	4.12	<13	PASS
		1	74	4.04	<13	PASS
		37	0	4.87	<13	PASS
		37	18	4.69	<13	PASS
		37	38	4.79	<13	PASS
		75	0	5.30	<13	PASS
	MCH	1	0	3.94	<13	PASS
		1	37	3.58	<13	PASS
		1	74	4.73	<13	PASS
		37	0	4.25	<13	PASS
		37	18	4.36	<13	PASS
		37	38	5.27	<13	PASS
		75	0	5.34	<13	PASS
	HCH	1	0	4.46	<13	PASS
		1	37	4.15	<13	PASS
		1	74	3.65	<13	PASS
		37	0	4.59	<13	PASS
		37	18	4.64	<13	PASS
		37	38	4.83	<13	PASS
		75	0	5.42	<13	PASS
16QAM	LCH	1	0	5.09	<13	PASS
		1	37	4.33	<13	PASS
		1	74	4.77	<13	PASS
		37	0	5.11	<13	PASS
		37	18	5.15	<13	PASS
		37	38	5.67	<13	PASS
		75	0	6.08	<13	PASS
	MCH	1	0	4.18	<13	PASS
		1	37	4.36	<13	PASS
		1	74	5.58	<13	PASS
		37	0	6.14	<13	PASS
		37	18	6.11	<13	PASS
		37	38	6.12	<13	PASS
		75	0	6.07	<13	PASS

The results shown in this test report refer only to the sample(s) tested unless otherwise stated and the sample(s) are retained for 30 days only. The document is issued by AGC, this document cannot be reproduced except in full with our prior written permission. The more details and the authenticity of the report will be confirmed at http://www.agc-cert.com.

	HCH	1	0	5.54	<13	PASS
		1	37	5.39	<13	PASS
		1	74	4.66	<13	PASS
		37	0	5.65	<13	PASS
		37	18	5.42	<13	PASS
		37	38	5.74	<13	PASS
		75	0	6.13	<13	PASS

Channel Bandwidth: 20 MHz

Channel Bandwidth: 20 MHz						
Modulation	Channel	RB Configuration		Peak-to-Average Ratio [dB]	Limit [dB]	Verdict
		Size	Offset			
QPSK	LCH	1	0	3.83	<13	PASS
		1	49	4.12	<13	PASS
		1	99	4.27	<13	PASS
		50	0	4.25	<13	PASS
		50	25	4.33	<13	PASS
		50	50	4.73	<13	PASS
		100	0	5.12	<13	PASS
	MCH	1	0	4.01	<13	PASS
		1	49	4.21	<13	PASS
		1	99	4.92	<13	PASS
		50	0	5.26	<13	PASS
		50	25	5.33	<13	PASS
		50	50	5.35	<13	PASS
		100	0	5.18	<13	PASS
	HCH	1	0	4.73	<13	PASS
		1	49	4.12	<13	PASS
		1	99	4.01	<13	PASS
		50	0	5.21	<13	PASS
		50	25	5.13	<13	PASS
		50	50	5.11	<13	PASS
		100	0	5.55	<13	PASS
16QAM	LCH	1	0	5.16	<13	PASS
		1	49	5.31	<13	PASS
		1	99	5.14	<13	PASS
		50	0	5.69	<13	PASS
		50	25	5.24	<13	PASS
		50	50	5.74	<13	PASS

The results shown in this test report refer only to the sample(s) tested unless otherwise stated and the sample(s) are retained for 30 days only. The document is issued by AGC, this document cannot be reproduced except in full with our prior written permission. The more details and the authenticity of the report will be confirmed at http://www.agc-cert.com.

		100	0	6.02	<13	PASS
	MCH	1	0	4.88	<13	PASS
		1	49	5.46	<13	PASS
		1	99	5.96	<13	PASS
		50	0	6.15	<13	PASS
		50	25	6.21	<13	PASS
		50	50	6.19	<13	PASS
		100	0	6.07	<13	PASS
	HCH	1	0	5.46	<13	PASS
		1	49	5.11	<13	PASS
		1	99	4.76	<13	PASS
		50	0	5.64	<13	PASS
		50	25	5.42	<13	PASS
		50	50	5.89	<13	PASS
		100	0	6.24	<13	PASS

The results shown in this test report refer only to the sample(s) tested unless otherwise stated and the sample(s) are retained for 30 days only. The document is issued by AGC, this document cannot be reproduced except in full with our prior written permission. The more details and the authenticity of the report will be confirmed at http://www.agc-cert.com.