doppler labs

182 Shipley St.
San Francisco CA, 94107
www.dopplerlabs.com

To Whom It May Concern:

Doppler Labs,Inc. acknowledges that the subject device requires the notification described in 45 CFR 15.19(a)(3). While the subject device is larger than the general guidance provided by the FCC in KDB Publication 784748 (palm of the hand), we note that, both the referenced KDB Publication and the actual FCC rule (§15.19(a)(5)) allow for practicality considerations to apply in determining whether the aforementioned compliance statement must be printed on the device itself, or if it may appear in the User Guide.

We take the position that it is impracticable for us to put this compliance statement on Here One™ (FCC ID: 2AF9A01011R, Model# HERE01011R) device itself for the following reasons:

- Excessive exterior markings would degrade the ID experience, where physical appearance is a key design objective, as it is in the case of this device.
- Portable devices such as this (like tablets) unlike a laptop, are generally held (rather than left lying on a table), such that all faces are visible.
- This approach is consistent with industry practice (based on benchmarking) for similar devices.
- Size and design of the earbud does not allow for legible FCC marking requirements as described in the KDB publication 784784 D01, Section 2.2 with the minimum font being 4 points (1.4mm high).
- We have filed a KDB inquiry (KDB tracking # 135023) for this issue and received pre-approval.

We further note that the compliance statement would be printed in the User Guide, and would also be available in the on-line version of the guide, thus improving readability and accessibility.

Thus, we believe that this approach satisfies both the letter and intent of the FCC's rules and guidance.

Specifics of this Device:

- Overall size of the unit is 20.9mm x 18.4mm x 20.1mm (see appendix A). This overall size is already challenging to include a 10 digit, 12mm long identifier.

- The top surface, while potentially large enough to contain the FCC identifier (because of size and curvature), is a critical cosmetic surface and visible when worn. Placing the FCC identifier in this location would significantly distract from the design and company branding. (see Appendix C)

- Neither the side, nor the back surfaces would support the 10-character FCC identifier string, even if printed at the minimum 4pt font. A string of 10 characters would span 12mm and would not fit on these surfaces (due to curvature related distortion it would cause with the laser etched artwork). (see Appendix C)

Conclusion

Based on the forgoing, we have concluded that this device is too small (due to size and design curvature) to support the legibility required for the FCC Identifier on any surface.

Please contact me at (503) 451-3311 if you require any additional information.

Regards,

Matthew Oates, Packaging Engineer
Doppler Labs Inc.
182 Shipley St
San Francisco CA, 94107
Email: matt.oates@dopplerlabs.com

Appendix A

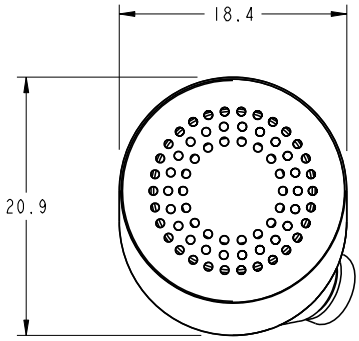

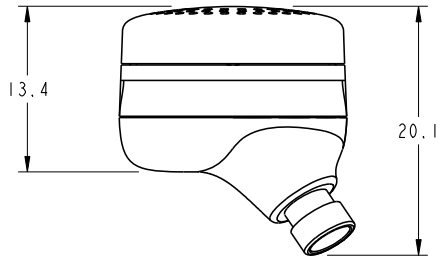

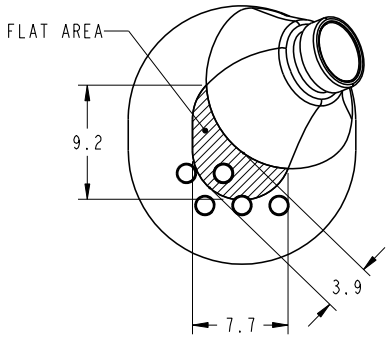

Appendix B

182 Shipley St.
San Francisco CA, 94107
www.dopplerlabs.com

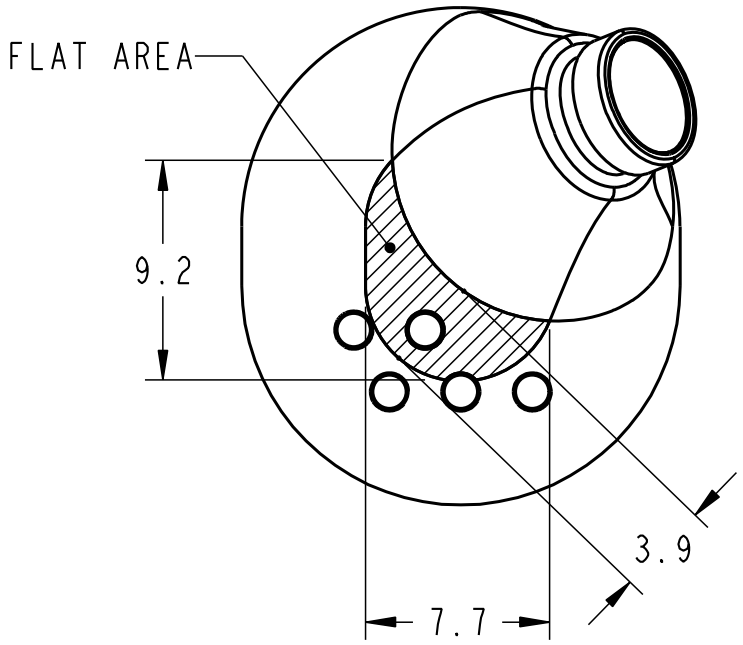

Appendix C

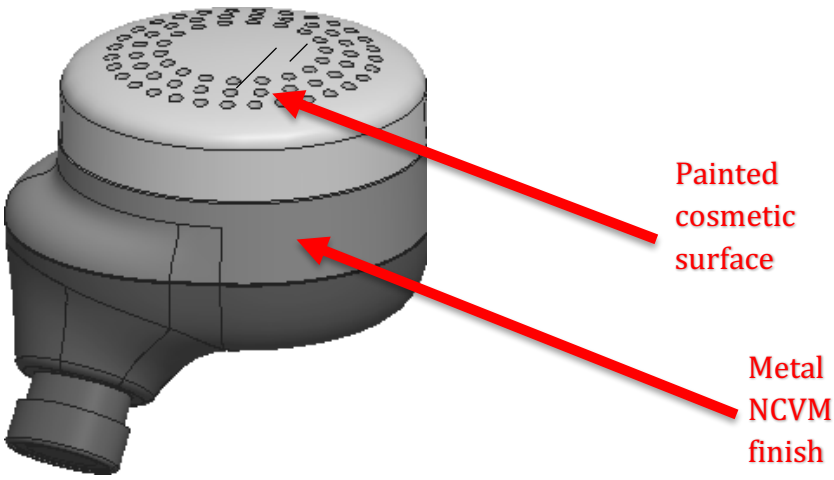
Painted cosmetic surface
Metal NCVM finish

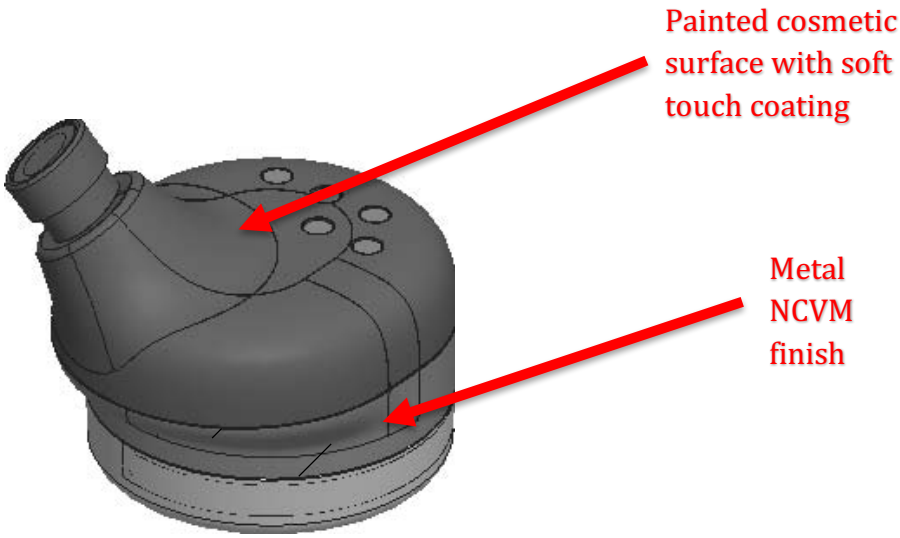
Painted cosmetic surface with soft touch coating
Metal NCVM finish