User Manual

Bicycle Speed & Cadence Sensor

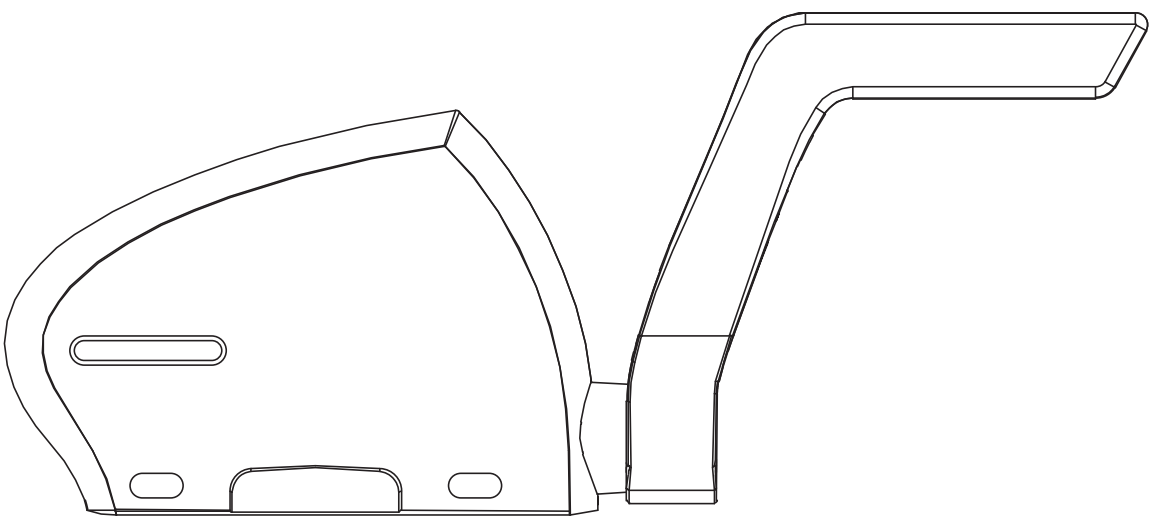

English Ver: V0.6

1 Standard Accessories

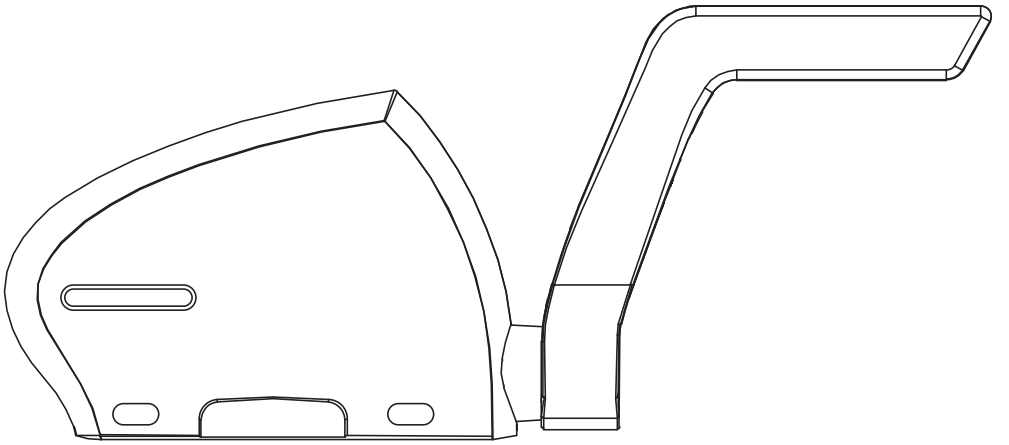

Main Device x1
(CR2032 battery installed)

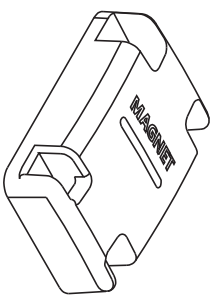

Crank Magnet
x1

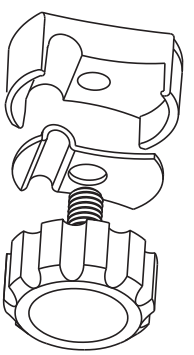

Spoke Magnet
x1

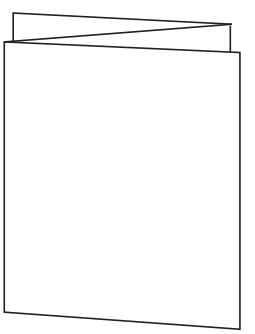

User Manual
x1

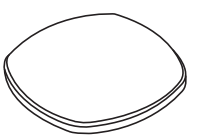

Battery Cover Tool
x1

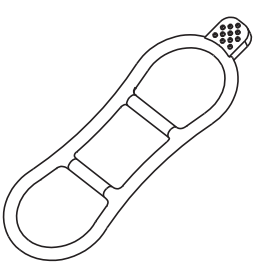

Battery Door
Tool x1

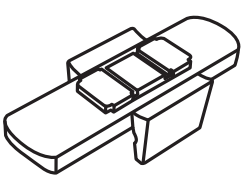

Rubber Pad for
Main Device x1

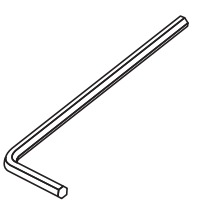

Screw Wrench
x1

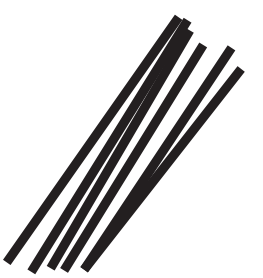

Cable Ties
x6

2 Accessories Installation Diagram

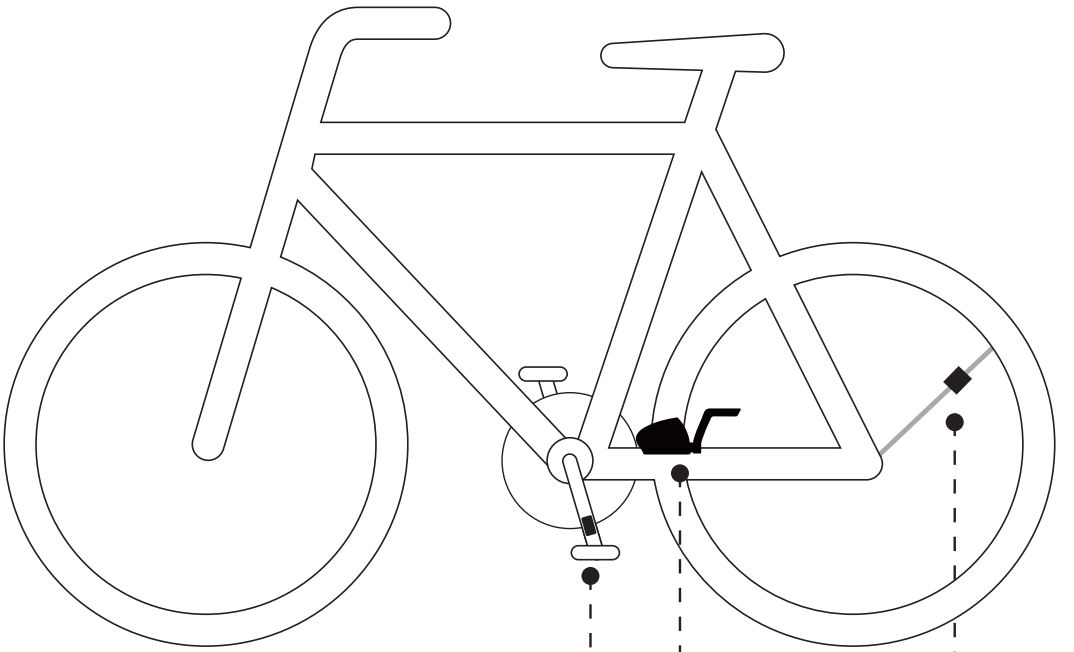

Crank Magnet (Detect the cycling cadence)

Main Device (Detect the cycling cadence and speed, and transfer real-time data to smart phone or sports watches or bike computer via Bluetooth and ANT+.)

Spoke Magnet (Detect the cycling speed)

2.1 LED Light & Magnetron Sensing Position

The device has a testing mode, it can help users verify whether the magnet and sensor are installed correctly.

In order to enter the testing mode, the sensor needs to reinstall the battery(please refer to page 8 “Battery Replacement”) . It is recommended that each time the device is installed, reinstall the battery to make the sensor enter the testing mode, so that can verify whether the installation is correct.

In the testing mode, if the speed sensor(Spoke magnet) is installed correctly and rotates the wheel, the LED light will flash blue, if the cadence sensor(Crank magnet) is installed correctly and turn the crank, the LED light will flash green.

The testing mode will last for 15 minutes after the battery was installed.

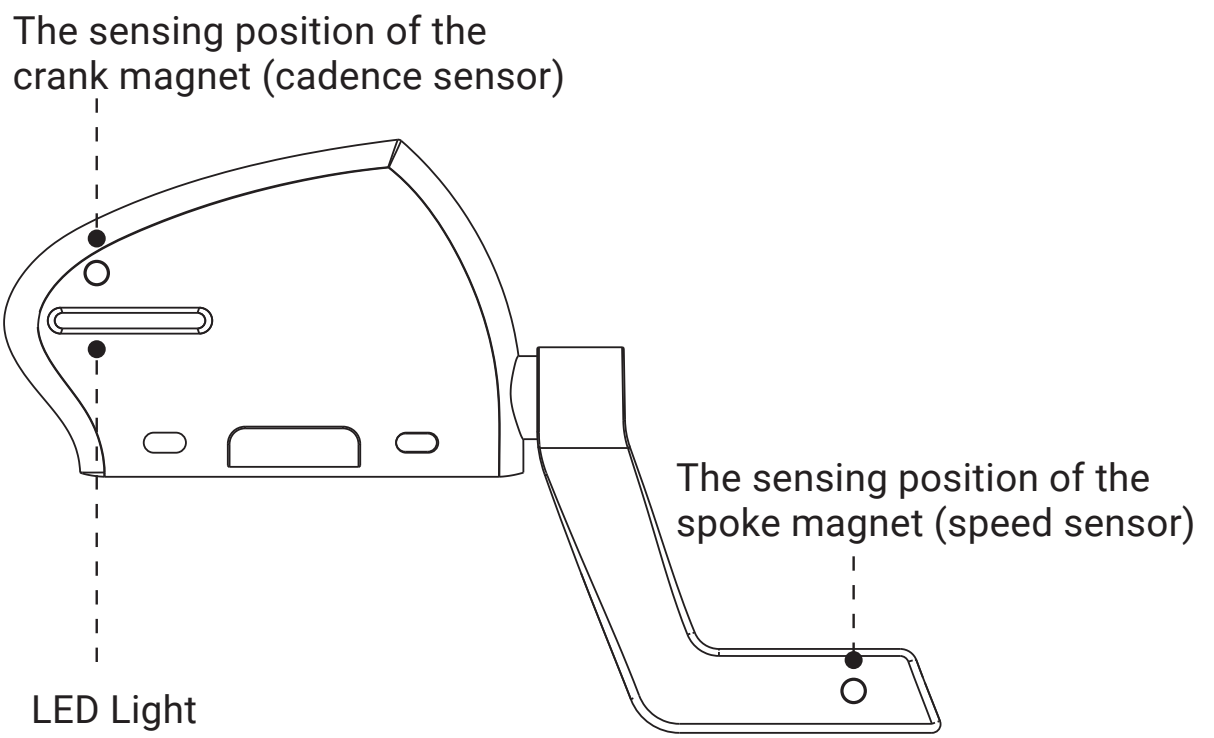

2.2 Accessories Installation

❶ Install the crank magnet on the crank and fix it with two cable ties (Before determining the position, don’ t tighten the ties until you get proper position, the following operations are the same).

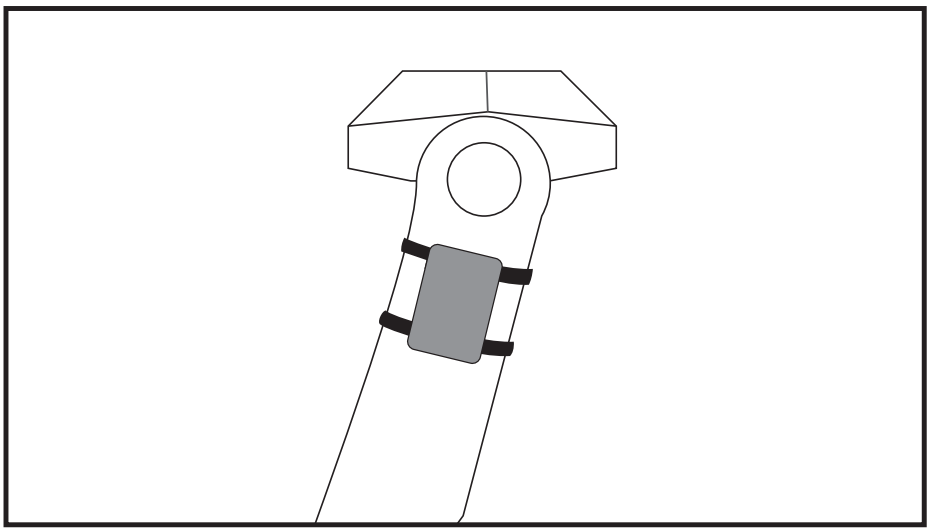

❷ Install the rubber pad onto the main sensor.

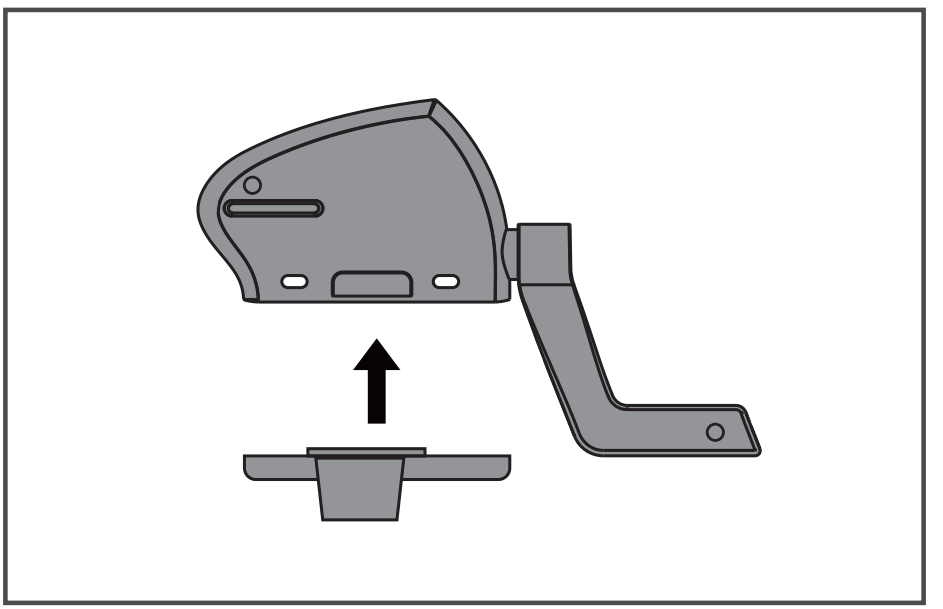

❸ Align the sensing position of the cadence sensor with the crank magnet, and install it as the picture shows below, fix it with cable ties.

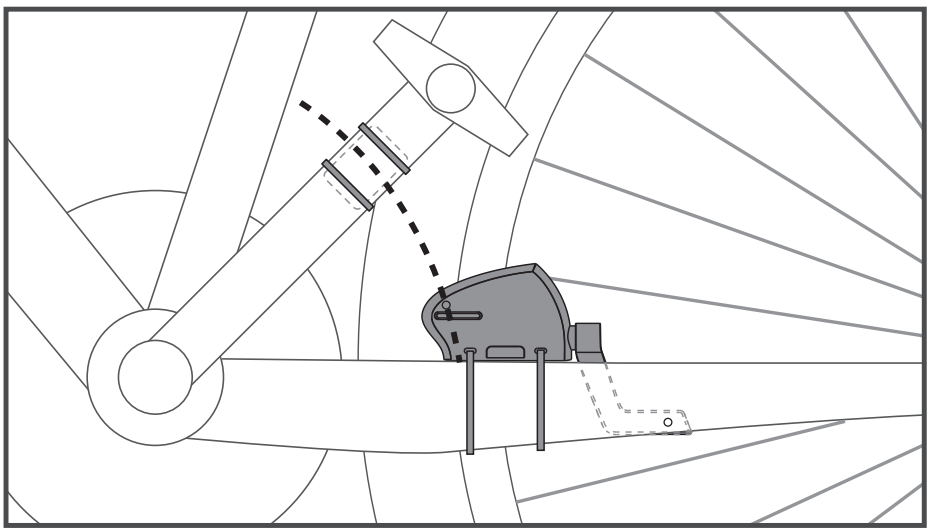

❹ Attach the groove of the spoke magnet to the bicycle spoke, align it with the sensing position of the speed sensor, and tighten it.

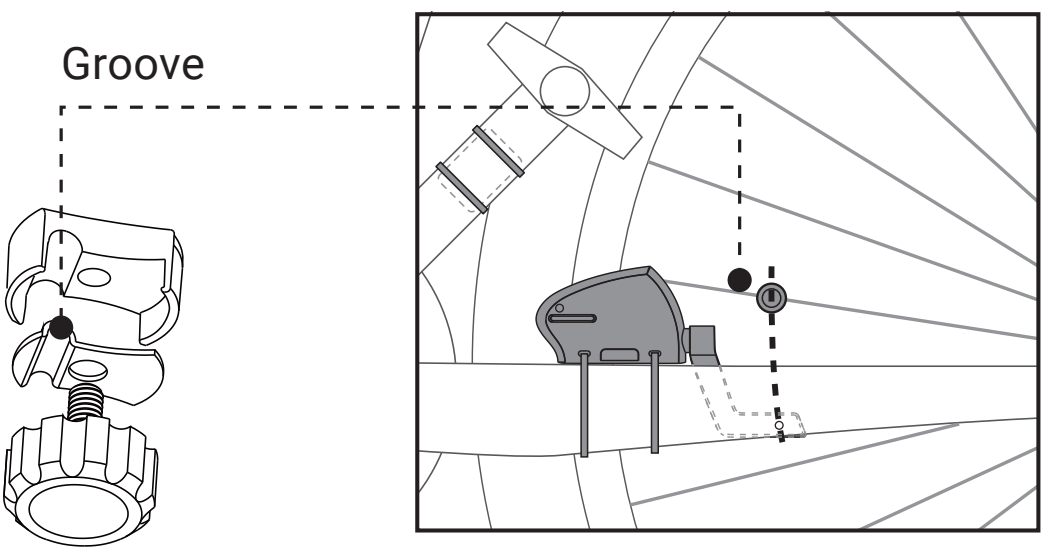

❺ Check whether the crank magnet and spoke magnet are aligned with the sensing position of the sensor, and the distance between them should be less than 30mm, and fix the tail of the sensor with screw wrench.(Notice: When rotating the tail, don't force it to exceed the rotation range, to avoid damage to the device).

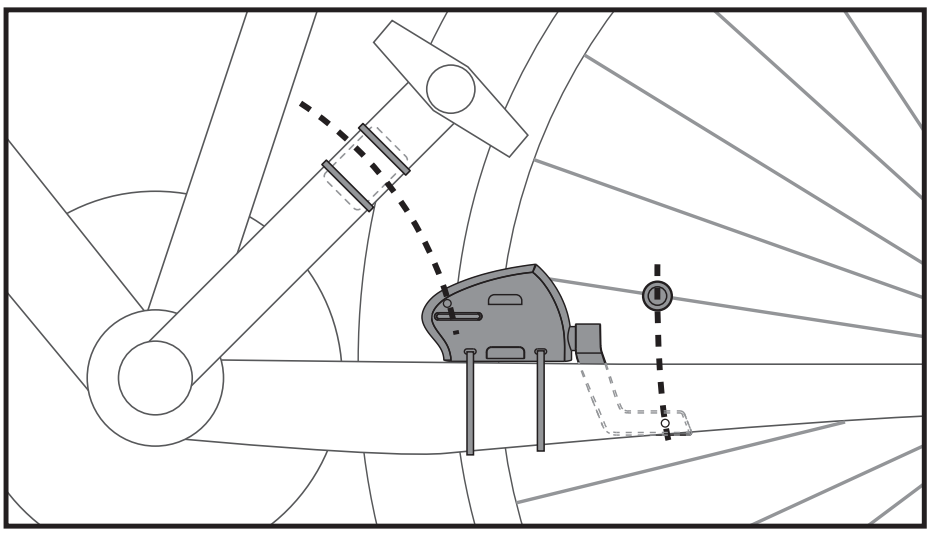

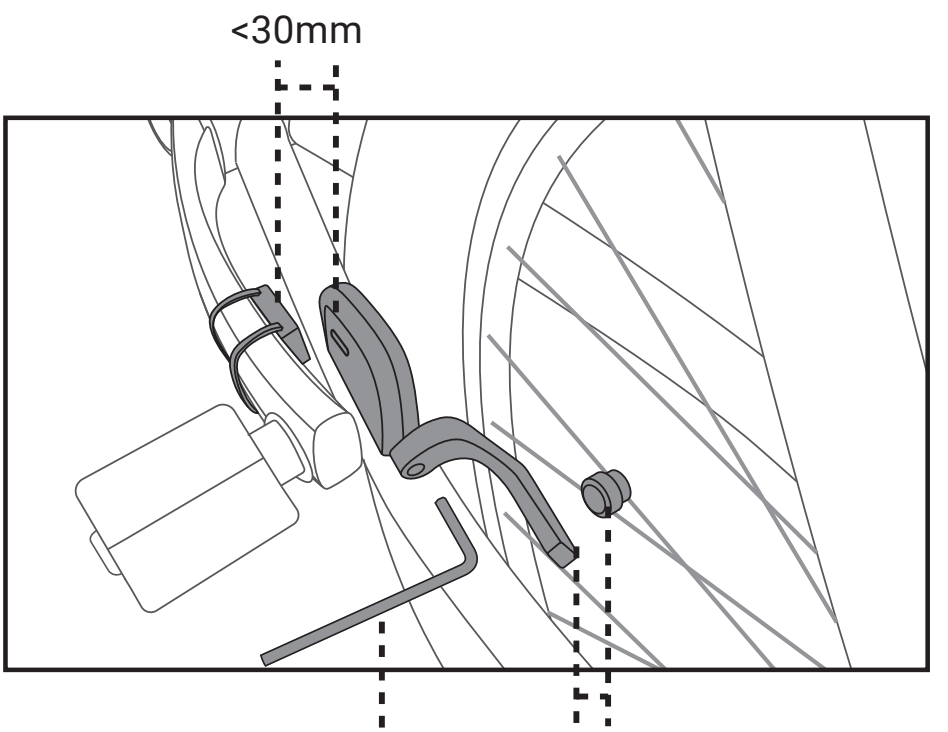

❻ Check whether the installation is successful. Turn the crank and the back wheel of the bicycle, speed LED shows blue color, cadence LED shows green color. After confirming that the installation is successful, tighten the cable ties and cut off the excess parts, and fix all the accessories with the rubber band.

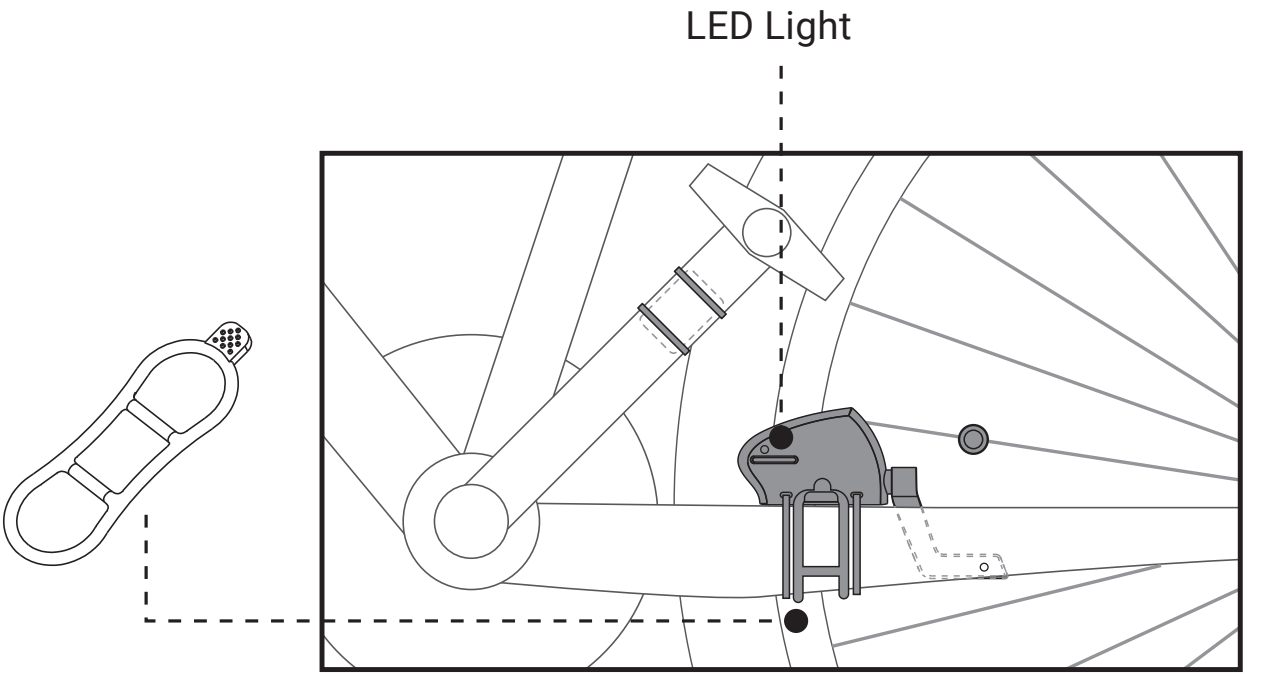

3 Battery Replacement

This Bluetooth bicycle speed and cadence sensor uses CR2032 button battery, it has been installed in the main device, the life of the battery is 500 hours. If the device cannot be detected, you can consider replacing the battery.

❶ Using the battery cover tool, rotate battery door to the OPEN direction to take off the battery door.

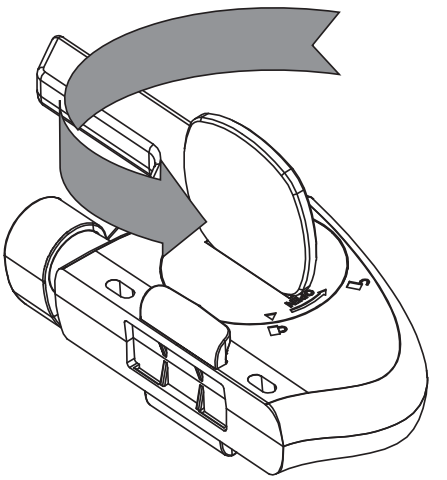

❷ Remove the battery, and properly dispose of the battery according to the local regulations.

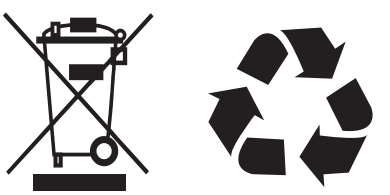

❸ Install the new battery (pay attention to the positive and negative poles), and use the battery cover tool to rotate the battery cover in the opposite direction of OPEN.

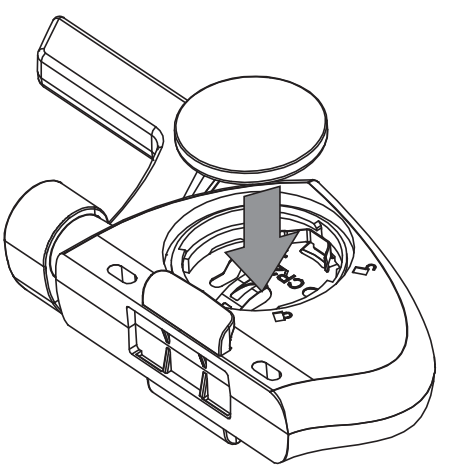

To avoid danger, batteries should be kept away from the children's area.

4 Specifications

Weight	19.2 g	Battery Life	500 hour
Wireless	Bluetooth5.0 & ANT+	Battery Type	CR2032
Distance	Bluetooth 5.0：25 m ANT+：10 m	Waterproof	IP67
Size	102.4*44.8*25.4mm	LED Light	Red, Blue, Green

Applicable Smart Phones

IOS 9.0 or above, iPhone 4s model or above

Android 4.3 or above with Bluetooth 5.0

Compatible with multiple App

Wahoo Fitness / Runtastic Pro / Zwif / UA Run / Openrider Strava / Endomondo / ZWIFT.(Notice: After these Apps has been updated, there may be incompatibility, please refer to the latest test)

5 FAQ

- If there is cadence or speed data missing, please check the position of the magnet and sensor installed, please refer to the "2.2 Accessories Installation " to adjust until the data is normal.

- The Bluetooth 5.0 and ANT+ protocol of the bicycle speed / cadence sensor can work at the same time, if you want to connect the smart phone and sports watches separately, please make sure that the device you are connecting has Bluetooth 5.0 and ANT+.

- The device compatible with a variety of popular fitness Apps, about how to connect, please refer to the instructions of the App.

6 Disclaimer

- The information contained in this manual just for reference. The product described above may be subject to alteration owing to the manufacturer's continuing research and development plans, without making an announcement in advance.

- We shall not bear any legal responsibility for any direct or indirect, accidental and special damages, losses and expenses arising from or in connection with the use of this manual and the product described in this manual.

NOTE: This equipment has been tested and found to comply with the limits for a Class B digital device, pursuant to part 15 of the FCC Rules. These limits are designed to provide reasonable protection against harmful interference in a residential installation. This equipment generates uses and can radiate radio frequency energy and, if not installed and used in accordance with the instructions, may cause harmful interference to radio communications. However, there is no guarantee that interference will not occur in a particular installation. If this equipment does cause harmful interference to radio or television reception, which can be determined by turning the equipment off and on, the user is encouraged to try to correct the interference by one or more of the following measures:

- Reorient or relocate the receiving antenna.
- Increase the separation between the equipment and receiver.
-Connect the equipment into an outlet on a circuit different from that to which the receiver is connected.
-Consult the dealer or an experienced radio/TV technician for help

Changes or modifications not expressly approved by the party responsible for compliance could void the user's authority to operate the equipment.

This device complies with Part 15 of the FCC Rules. Operation is subject to the following two conditions:
(1) this device may not cause harmful interference, and
(2) this device must accept any interference received, including interference that may cause undesired operation.