USER MANUAL

BK9

Bike Speed & Cadence Sensor

SCAN for more
詳しくはこちら
Cerca altro
Nach mehr SUCHEN
SCANNEZ pour plus
ESCANEAR para más

BK9-RTN-I1-2329

COOSPO

ALL ABOUT PASSION

Standard Accessories

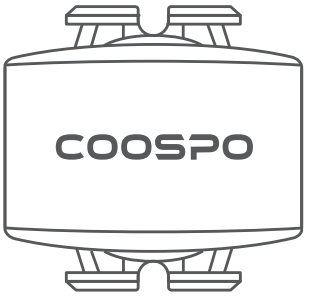

BK9 x1

User Manual x1

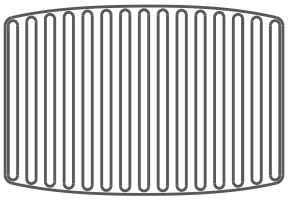

Cadence Silicone Pad x1

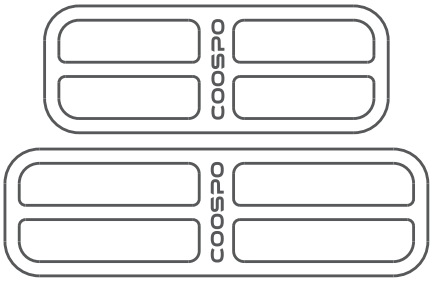

Silicone Strap x2

Installation

Please remove the transparent insulation sheet first.

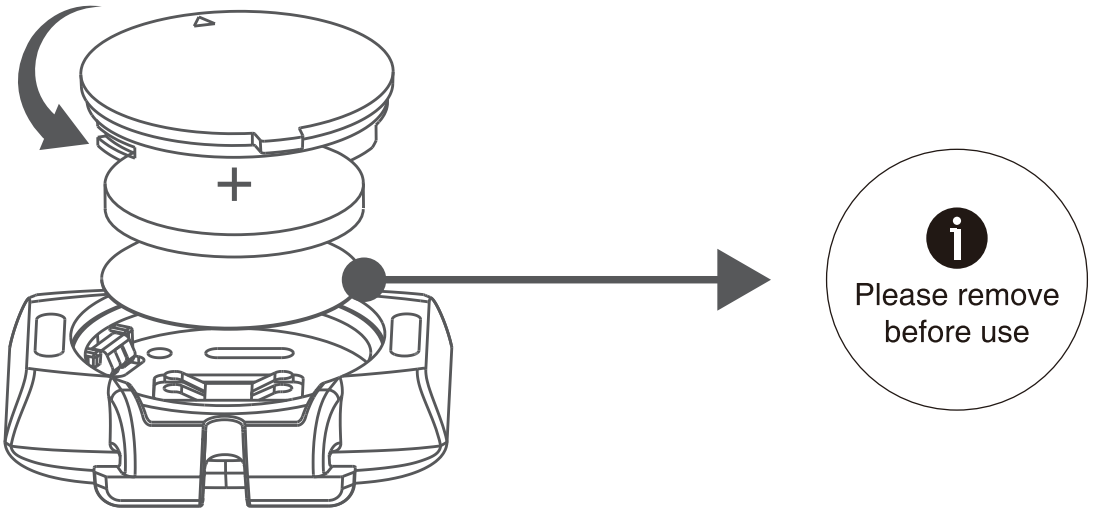

1. Install the silicone pad on the back of the sensor, and select the Silicone Strap that fits the thickness of the crank.
2. Install the cadence sensor on the inner side of the left crank.
3. Turn the crank to ensure that the cadence sensor and Silicone Strap do not rub against the bike or shoes.

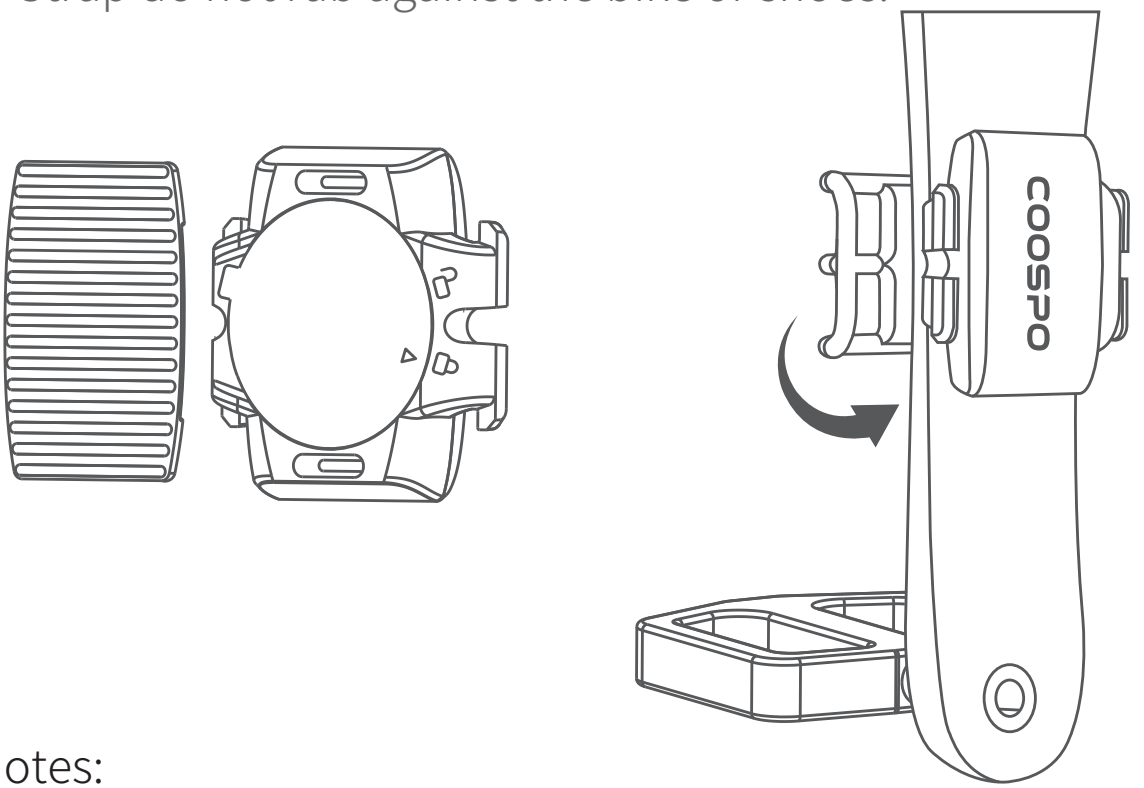

Notes:

1. The blue light on means the device is enabled.
2. Make sure it is securely installed and not touching or rubbing against any other parts of the bike to avoid damage or loss during your ride.

Pairing

Note: The sensor will go into sleep mode after a period of inactivity. Please turn the wheel to wake it up before pairing.

Connect to cycling apps (Bluetooth)

1. Turn on the Bluetooth and location service on your phone.

   Note: Do not pair the sensor in the Bluetooth settings of your phone.

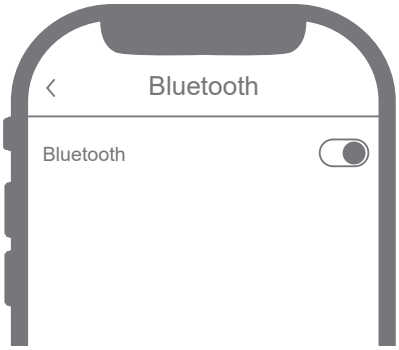

2. Find the Sensor Settings Menu in cycling app.
   For example, go to CoospoRide App > More > Sensors >
   Select the sensor or use another app to "Add Device"

3. Find the BK9 Bluetooth ID and select it in the app to connect.

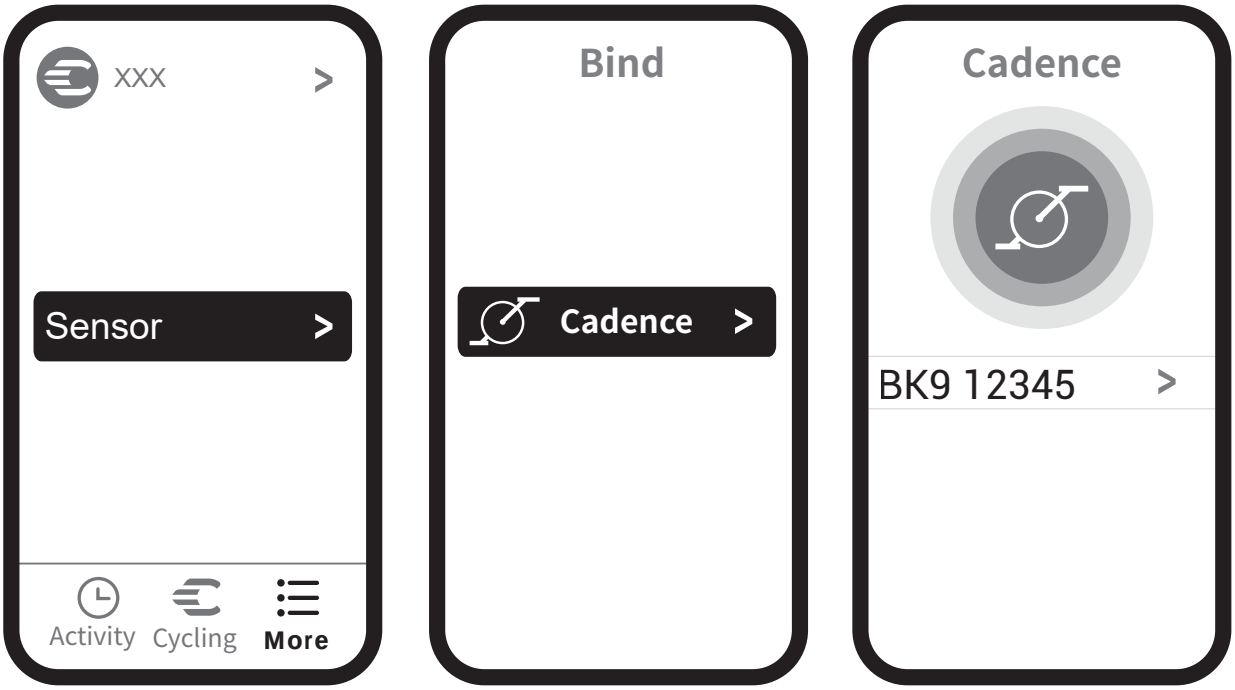

Connect to smart devices such as bike computer (Bluetooth and ANT+)

1. Select "Add Sensor" from the smart device settings menu.
2. Find BK9 Bluetooth or ANT+ ID and select it to connect.

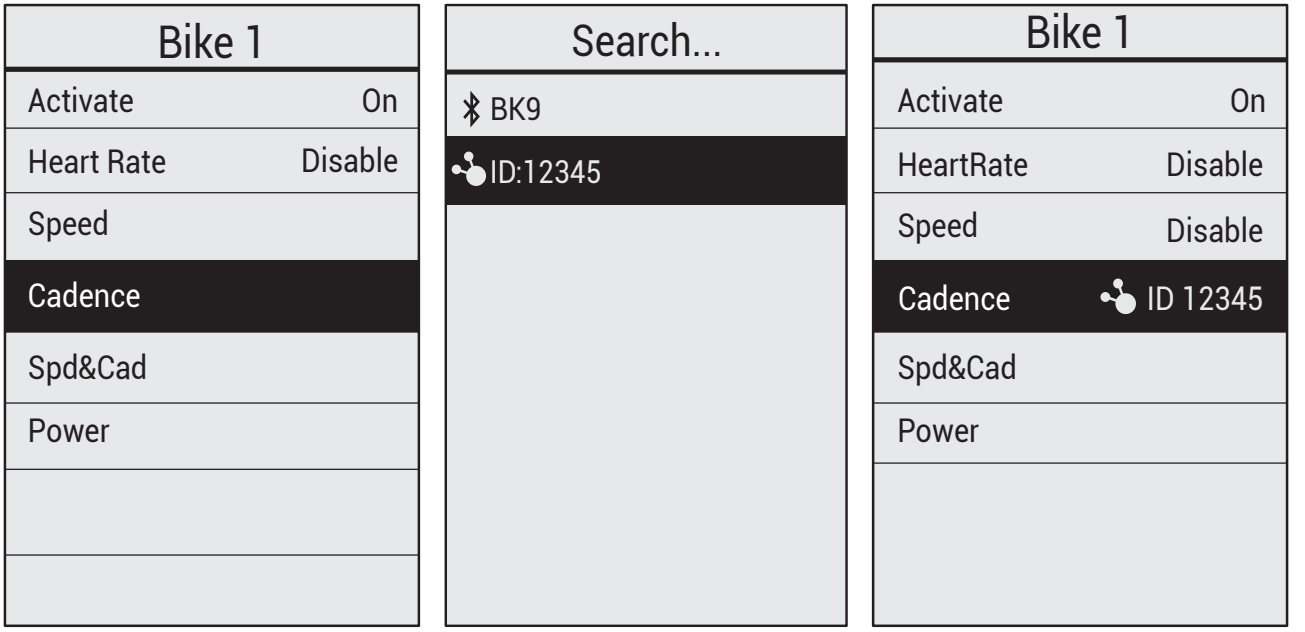

Function and Status

Sensor Status	Indicator Light
Battery Installed	Red and Blue Alternately Flashing
Wake Up	Blue Light Flashing
Low Battery Alert	Red Light Flashing

Specifications

Model	BK9
Battery Type	CR2032, 3V
Battery Life	300H
Wireless Transmission	Bluetooth 5.0 ; ANT+
Waterproof	IP67

Note: The actual battery life depends on the usage environment. For more information, please refer to www.coospo.com.

Disclaimer

- The information contained in this manual just for reference. The product described above may be subject to alteration owing to the manufacturer's continuing research and development plans, without making an announcement in advance.
- We shall not make any statement or warranty about this manual.

FCC statement

NOTE: This equipment has been tested and found to comply with the limits for a Class B digital device, pursuant to part 15 of the FCC Rules. These limits are designed to provide reasonable protection against harmful interference in a residential installation. This equipment generates, uses and can radiate radio frequency energy and, if not installed and used in accordance with the instructions, may cause harmful interference to radio communications. However, there is no guarantee that interference will not occur in a particular installation. If this equipment does cause harmful interference to radio or television reception, which can be determined by turning the equipment off and on, the user is encouraged to try to correct the interference by one or more of the following measures:

- Reorient or relocate the receiving antenna.

- Increase the separation between the equipment and receiver.

- Connect the equipment into an outlet on a circuit different from that to which the receiver is connected.

- Consult the dealer or an experienced radio/TV technician for help

Changes or modifications not expressly approved by the party responsible for compliance could void the user's authority to operate the equipment.

This device complies with Part 15 of the FCC Rules. Operation is subject to the following two conditions:

(1) this device may not cause harmful interference, and (2) this device must accept any interference received, including interference that may cause undesired operation.

IC WARNING

This device contains licence-exempt transmitter(s)/receiver(s) that comply with Innovation, Science and Economic Development Canada’ s licence-exempt RSS(s). Operation is subject to the following two conditions:

(1) This device may not cause interference.

(2) This device must accept any interference, including interference that may cause undesired operation of the device.

L’ émetteur/récepteur exempt de licence contenu dans le présent appareil est conforme aux CNR d’ Innovation, Sciences et Développement économique Canada applicables aux appareils radio exempts de licence. L’ exploitation est autorisée aux deux conditions suivantes :

(1) L' appareil ne doit pas produire de brouillage;

(2) L' appareil doit accepter tout brouillage radioélectrique subi, même si le brouillage est susceptible d' en compromettre le fonctionnement.