Antenna Pattern Measurement
Test Report for Proteus-III & Thyone-I
26 11 01 102 xxxx

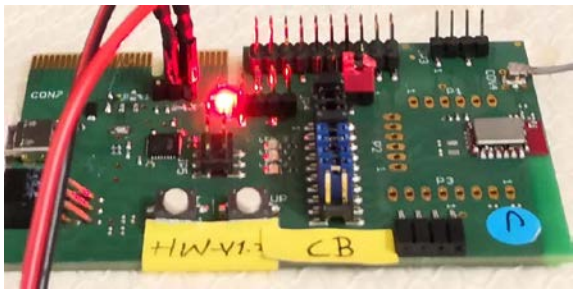

Report Reference: MDE_WUERTH_1901_OTA01

Date: 10.10.2019

Test Laboratory:

7layers GmbH
Borsigstrasse 11
40880 Ratingen
Germany

DAkkS
Deutsche
Akkreditierungsstelle
D-PL-12140-01-01

Note:

The following test results relate only to the devices specified in this document. This report shall not be reproduced in parts without the written approval of the test laboratory.

Content:

1 TEST LAB DECLARATION 3

2 SIGNATURES 3

3 PROJECT AND RESULT SUMMARY 4

4 BRIEF DESCRIPTION OF SETTINGS AND TEST METHOD 5

4.1 References and Standards Used 5

4.2 Test Procedure TRP 5

4.3 Definitions 6

4.4 Measurement uncertainties 7

5 DETAILED RADIATED TEST RESULTS AND PATTERN 8

5.1 Equipment List 8

5.2 Radiation Pattern TRP Bluetooth LE 2402 MHz 9

5.3 Radiation Pattern TRP Bluetooth LE 2440 MHz 11

5.4 Radiation Pattern TRP Bluetooth LE 2480 MHz 13

1 Test Lab Declaration

All test results stated relate only to the device tested.

The test report must usually be reproduced in full. Reproduction of an excerpt is hereby granted, but only when:

- **in the resulting document it's status (being an excerpt) is clearly stated and**
- **in minimum chapter 3 is included completely.**

2 SIGNATURES

Responsible for Accreditation Scope:	Robert Machulec	Responsible for Test Report:	Dieter Sütthoff

3 Project and Result Summary

DUT	Proteus-III & Thyone-I	OUT Code	Radiated Sample: DE1387000aa01 Conducted Sample: DE1387000af01
Test lab	7layers GmbH Borsigstr. 11 40880 Ratingen Germany	Set up	free space
		Test start	19.09.2019
Customer	Würth Elektronik eiSos GmbH & Co. KG Max-Eyth-Straße 1 74638 Waldenburg	Report date	10.10.2019
		Report by	Dieter Sütthoff
		Approved by	Robert Machulec

Bluetooth LE			
RMS Detector Modulated	**2402 MHz**	**2440 MHz**	**2480 MHz**
Antenna Port Input Power (EUT Conducted Sample)	**6.2**	**5.7**	**5.3**
Tot. Rad. Pwr. (dBm)	0.3	0.8	-1.3
Peak EIRP (dBm)	**3.6**	**4.1**	**2.5**
Directivity (dBi)	3.3	3.3	3.7
Efficiency (dB)	-5.9	-4.9	-6.6
Efficiency (%)	26	33	22
Gain (dBi)	**-2.6**	**-1.6**	**-2.8**

Tab. 1: Test result summary Bluetooth

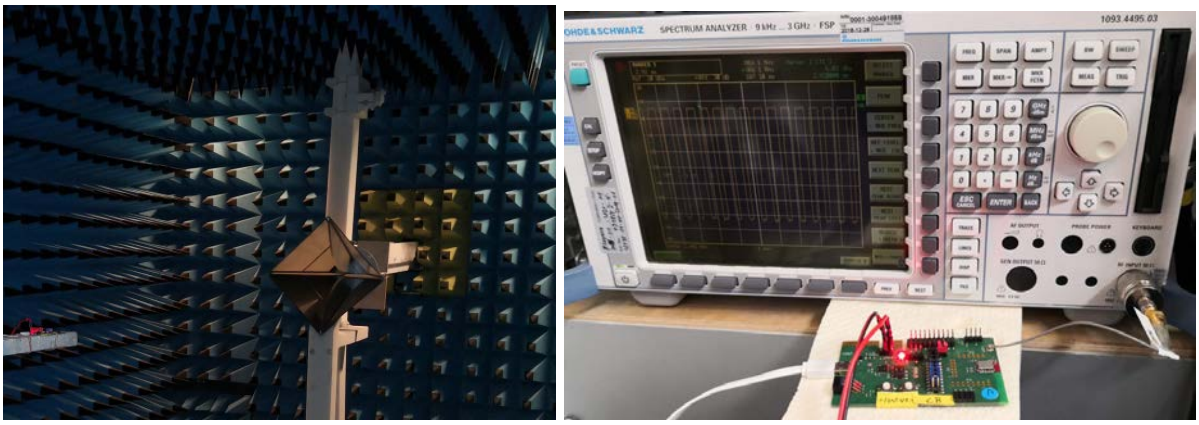

Fig. 1: Photo of DUT (left picture: radiated set up, right picture: conducted test set up).

4 Brief Description of Settings and Test Method

4.1 References and Standards Used

[1] CTIA: “Test Plan for Wireless Device Over the Air Performance”, Revision Number 3.8.2, 04/2019.

[2] 7 layers document: “7 layers Germany OTA Measurement Uncertainties”, Version March 2019.

4.2 Test Procedure TRP

The method of measurement for radiated RF power based on the principals of the test standard CTIA: “Test Plan for Mobile Station Over the Air Performance” [2].

In general, the following approach is applied for TRP measurements:

- For TRP measurement put OUT in a mode where it is transmitting periodical RF energy.
- Rotate the EUT in all room directions with an angle grid of 15°.
- Gather power data for both, vertical and horizontal polarization.
- Calculate total radiated power by integrating over the whole sphere as outlined in [2].

The test setup was placed at the turning device inside a fully anechoic chamber. The object under test (OUT) was set to transmit permanently signal on specific frequencies

The total radiated power (TRP) of the test setup was measured in all angle direction (3D) using a step width of <= 15° and using two measurement antenna polarizations (vertical and horizontal).

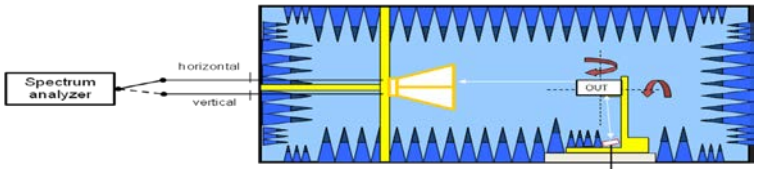

Fig. 1: Block diagram for TRP measurement

4.3 Definitions

3GPP	3rd Generation Partnership Project
BER	Bit error rate or bit error ratio
BS	Base station
CTIA	Cellular Telecommunications & Internet Association
DUT	Device under test
FS	Free space
TP	Talk position (phone is situated at SAM = human head phantom)
TRP	Total Radiated Power
EIRP	Effective Isotropic Radiated Power
TRS	Total Radiated Sensitivity (same as TIS in CTIA), loss of link level
EIRS	Effective Isotropic Radiated Sensitivity

4.4 Measurement uncertainties

Maxim Values	OTA lab at 7layers Germany [2]
TRP Free space	±1.7 dB

Standard specific table with the measurement uncertainties of the used parameters

The measurement uncertainties for all parameters are calculated with an expansion factor (coverage factor) k = 1.96. This means, that the true value is in the corresponding interval with a probability of 95 %.

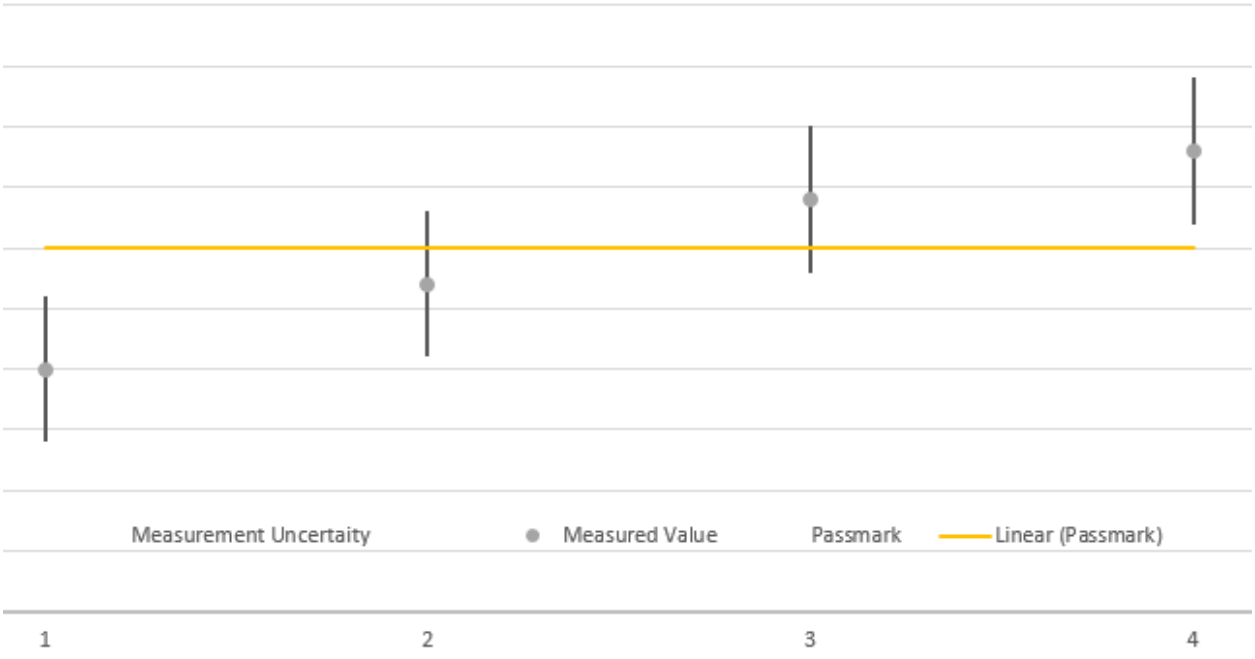

The verdicts in this test report are given according the above diagram:

Case	Measured Value	Uncertainty Range	Verdict
1	below pass mark	below pass mark	Passed
2	below pass mark	within pass mark	Passed
3	above pass mark	within pass mark	Failed
4	above pass mark	above pass mark	Failed

That means, the laboratory applies, as decision rule (see ISO/IEC 17025:2017), the so called shared risk principle.

5 Detailed Radiated Test Results and Pattern

5.1 Equipment List

For TRP measurements:

Antenna:	Dual polarized horn ETS3164-03 by ETS	SN 00052619
Receiver:	FSP3 spectrum analyzer by R&S for 2.4 GHz	SN 838164/004

Orientation of EUT compared to a standard device

For orientation of the EUT in the result pictures below the following photos illustrate the used orientation compared to a standard device:

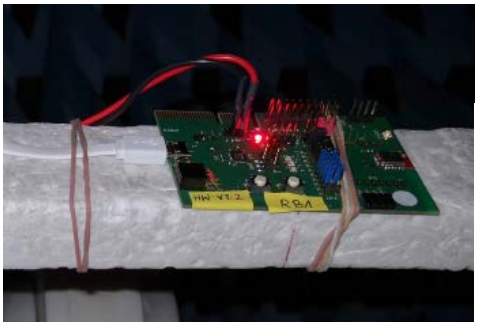

Fig. 2: Photo orientation of DUT compared to a phone.

5.2 Radiation Pattern TRP Bluetooth LE 2402 MHz

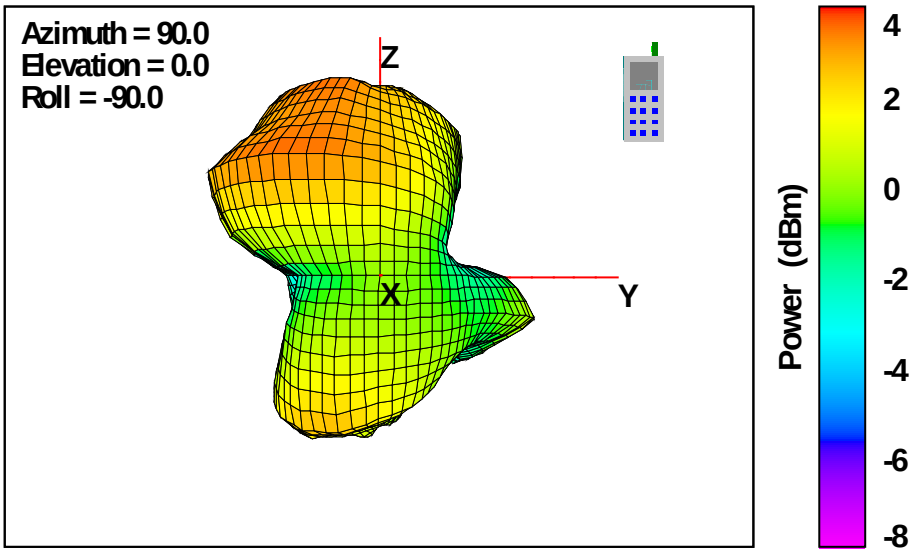

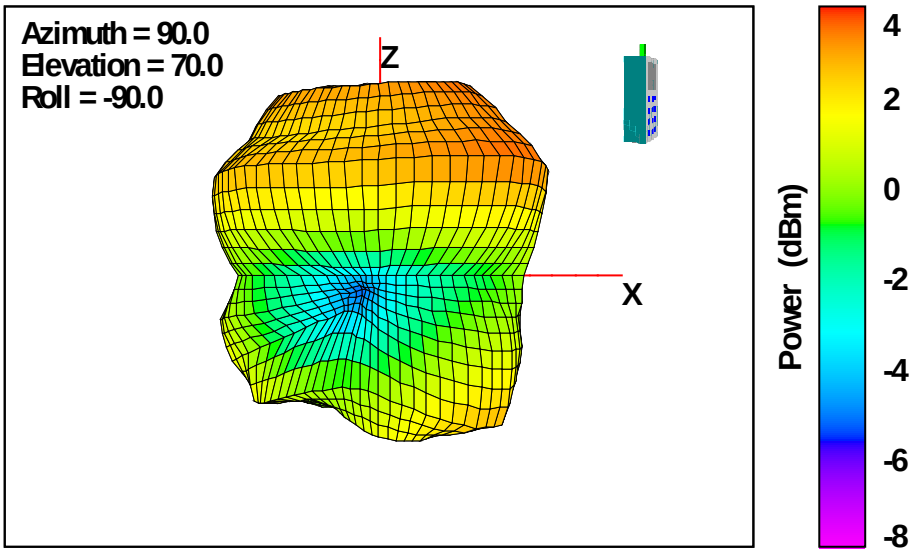

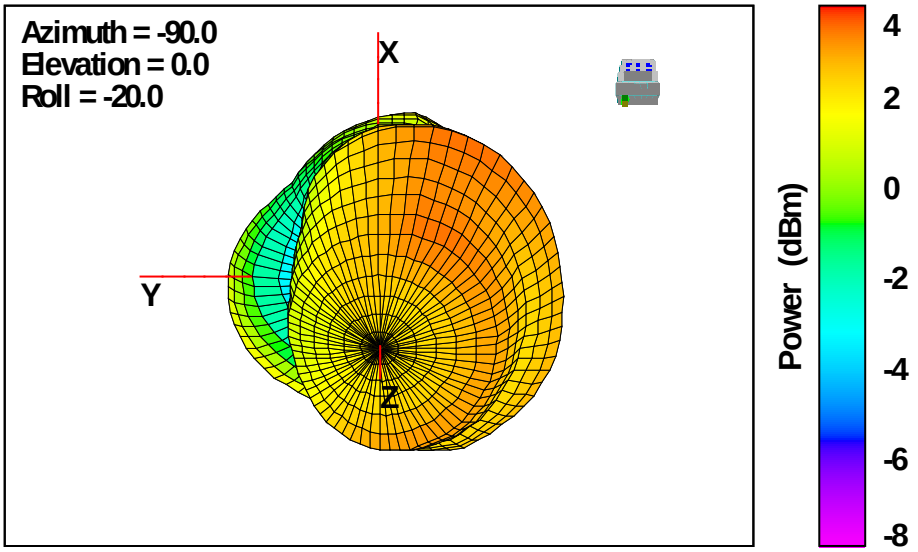

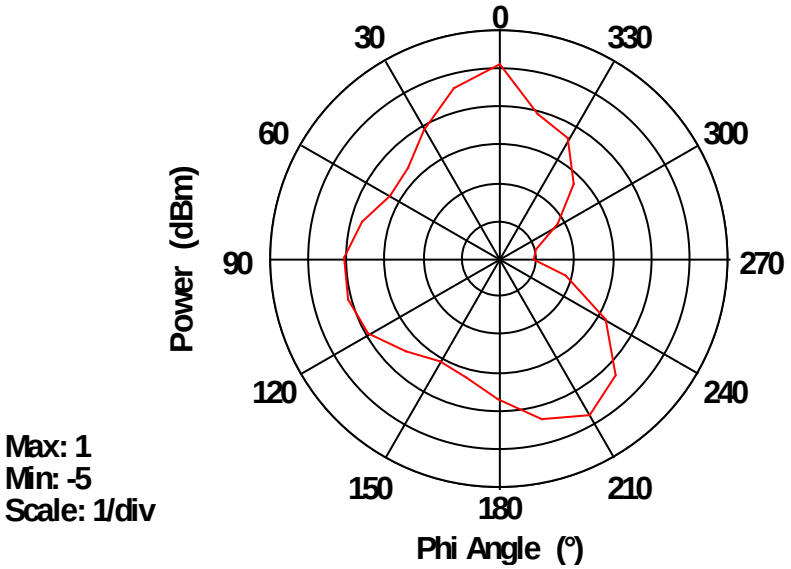

Theta = 90°

Fig. 3: 2402 MHz 3D Radiated pattern orientation of DUT compared to a phone.

5.3 Radiation Pattern TRP Bluetooth LE 2440 MHz

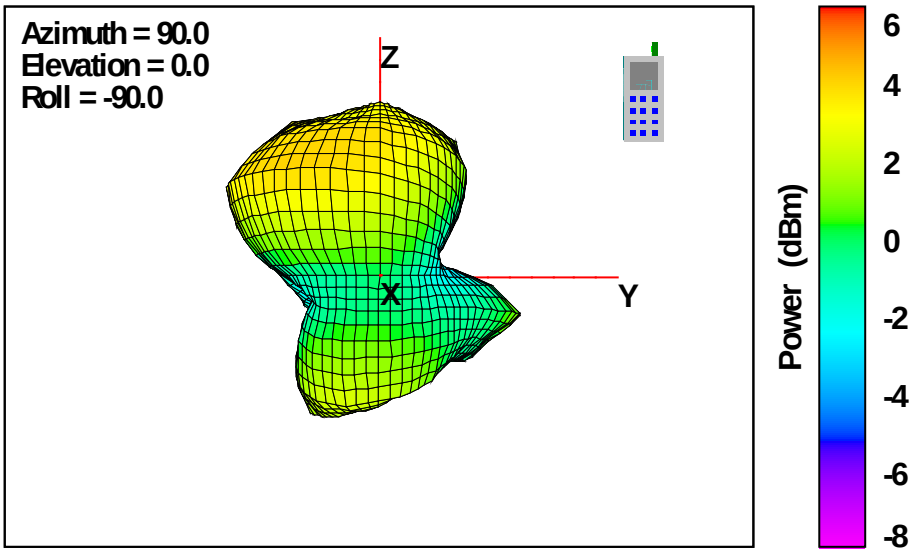

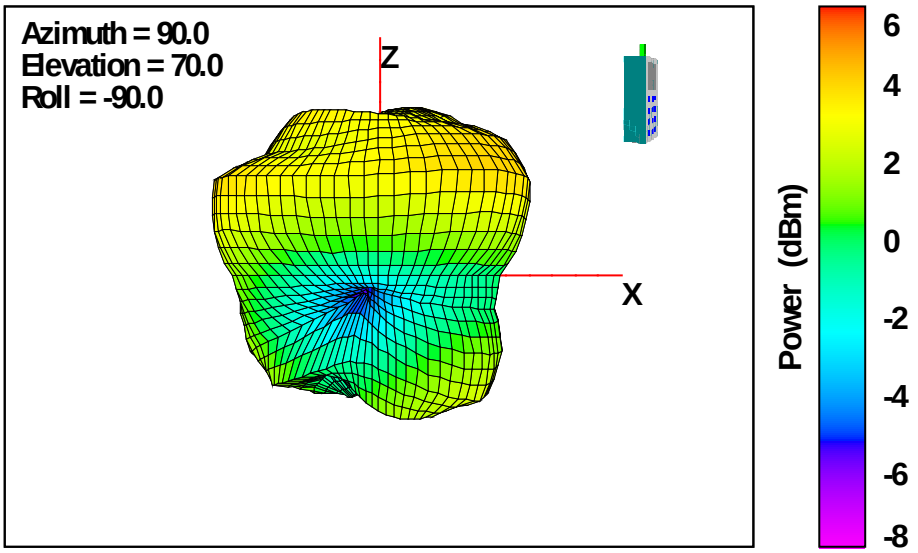

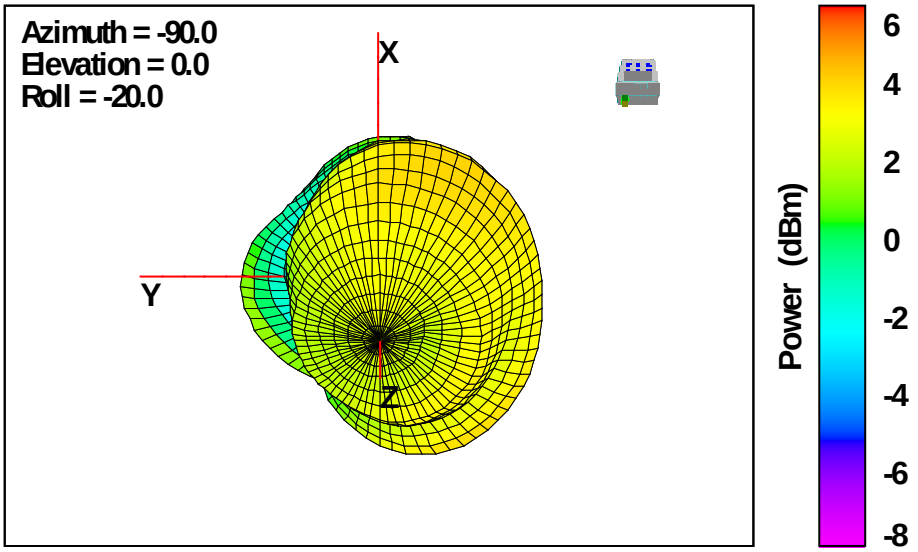

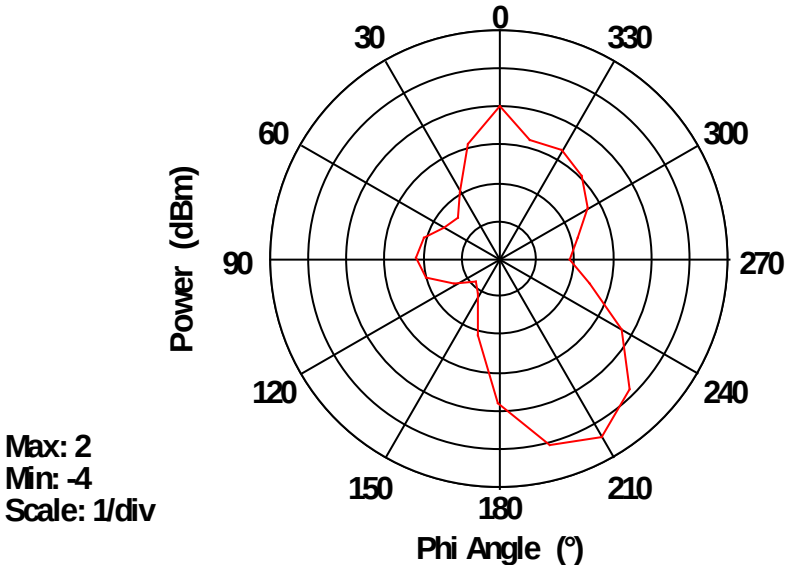

Theta = 90°

Fig. 4: 2440 MHz 3D Radiated pattern orientation of DUT compared to a phone.

5.4 Radiation Pattern TRP Bluetooth LE 2480 MHz

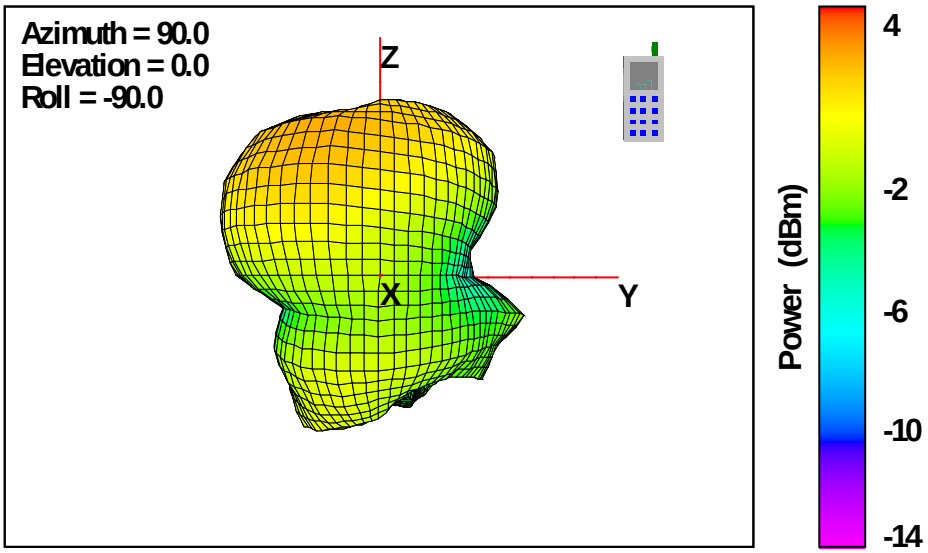

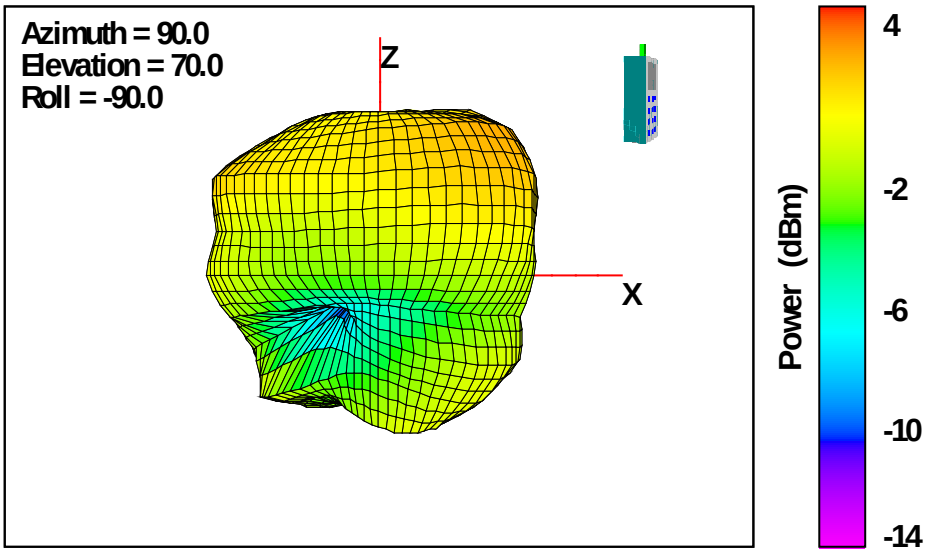

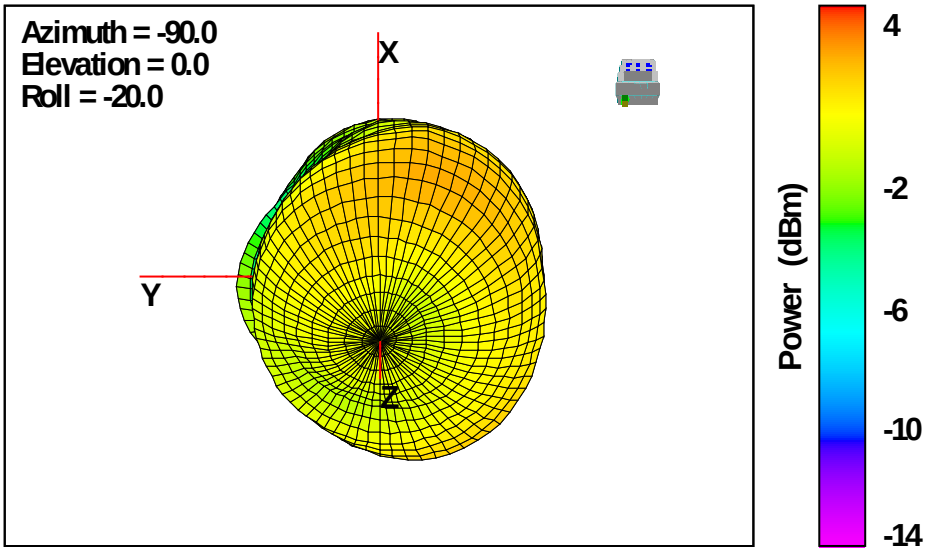

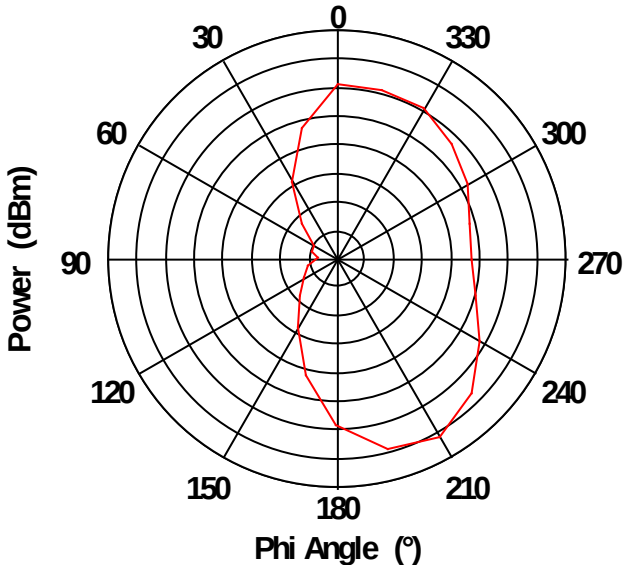

Theta = 90°

Fig. 5: 2480 MHz 3D Radiated pattern orientation of DUT compared to a phone.