Welch Allyn RetinaVue™ 100 Imager

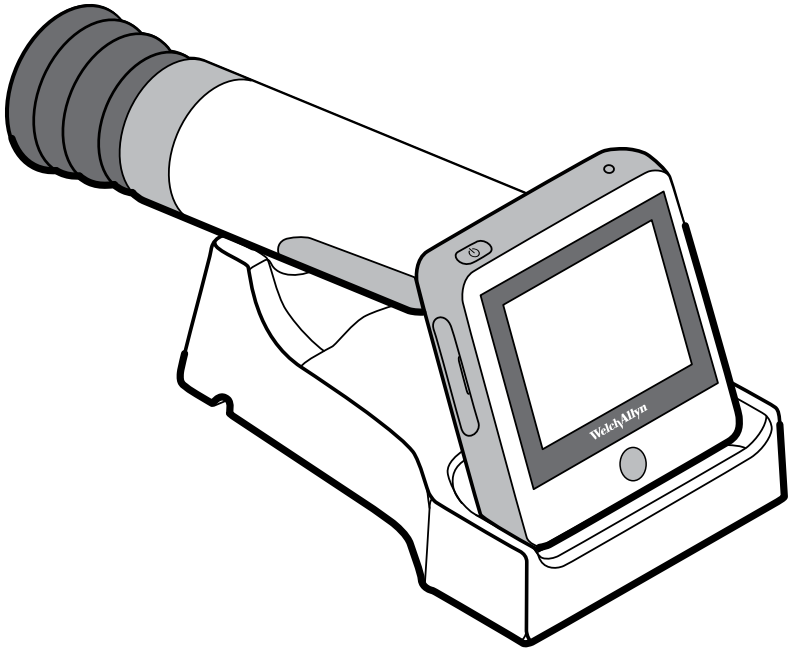

Directions for use

Software version 4.6.XX

Welch Allyn®

Advancing Frontline Care™

© 2016 Welch Allyn. All rights are reserved. To support the intended use of the product described in this publication, the purchaser of the product is permitted to copy this publication, for internal distribution only, from the media provided by Welch Allyn. No other use, reproduction, or distribution of this publication, or any part of it, is permitted without written permission from Welch Allyn. Welch Allyn assumes no responsibility for any injury to anyone, or for any illegal or improper use of the product, that may result from failure to use this product in accordance with the instructions, cautions, warnings, or statement of intended use published in this manual.

Rx ONLY Prescription only or "For Use by or on the order of a licensed medical professional."

Software in this product is Copyright 2015 Welch Allyn or its vendors. All rights are reserved. The software is protected by United States of America copyright laws and international treaty provisions applicable worldwide. Under such laws, the licensee is entitled to use the copy of the software incorporated with this instrument as intended in the operation of the product in which it is embedded. The software may not be copied, decompiled, reverse-engineered, disassembled, or otherwise reduced to human-perceivable form. This is not a sale of the software or any copy of the software; all right, title, and ownership of the software remain with Welch Allyn or its vendors.

For information about any Welch Allyn product, contact Welch Allyn Technical Support: http://www.welchallyn.com/support.

411492, (printed copy)
DIR 80019780 Ver. C
Revision date: 2016-01

This manual applies to the REF 901103 Fundus Camera

Manufactured for Welch Allyn, Inc.
Medimaging Integrated Solution Inc. (MiiS)
1F, No. 7, R&D Rd II, Hsinchu Science Park,
Hsinchu, TAIWAN 30076, R.O.C.

Made in Taiwan

EC REP

Obelis S.A.
Bd. General Wahis 53,1030,
Brussels, Belgium

Advancing Frontline Care™

Contents

Symbols 1

Introduction 5
- Intended use 5
- About warnings and cautions 5
- General warnings and cautions 5
- Controls and connectors 7
- RetinaVue 100 Imager Home screen 8

Using the RetinaVue 100 Imager 17
- Unpack the system 17
- Docking station 23
- Patient data management 25
- Perform an eye exam using the Auto exam mode 28
- Perform a manual image capture while in Auto exam mode 34
- Skip an image capture while in Auto exam mode 35
- Perform a manual image capture while in Manual exam mode 36
- Update the RetinaVue 100 Imager software 38
- Viewing or changing the RetinaVue 100 Imager settings 39

Troubleshooting 41

Maintenance 45
- Clean and disinfect 45

Specifications 47

Device radio 49

General compliance and standards 51
- General radio compliance 51

Approved accessories 57
- Accessories 57

Warranty 59

Symbols

Documentation symbols

	WARNING The warning statements in this manual identify conditions or practices that could lead to illness, injury, or death. Warning symbols will appear with a grey background in a black and white document.		**Caution** The caution statements in this manual identify conditions or practices that could result in damage to the equipment or other property, or loss of data.
	Consult Directions for Use		

Power symbols

	Power button		Direct current (DC)
	Rated power input, DC		Rated power output, DC
	Fuse	Li-ion	Rechargeable battery
	Battery Charging - Non-AC powered		

Connectivity symbols

	USB		Wireless signal strength (requires optional software) • Best (4 bars) • Good (3 bars) • Fair (2 bars) • Weak (1 bar) • No signal (no bars)

- No connection (**X**)

Shipping, storing, and environment symbols

131°F 55°C -13°F -25°C	Temperature limit		Keep Dry
	Separate collection of Electrical and Electronic Equipment. Do not dispose as unsorted municipal waste.		Fragile
95% 15%	Humidity limitation		Atmospheric pressure limitation
	This way up	5	Stacking limit by number
	Recyclable		

Miscellaneous symbols

REF	Product Identifier	#	Reorder Number
GTIN	Global Trade Item Number		For indoor use only
	Type BF applied part	R_x ONLY	Prescription only or "For Use by or on the order of a licensed medical professional"
	Non-ionizing electromagnetic radiation	SN	Serial Number
FCC ID	The identification number assigned by the Federal Communication Commission 2AFB3WA-WEC100		Clock; time switch; timer

Battery charge level indicators

	Device is running on battery and is fully charged.		Device is running on battery and charge is below 75 percent.
	Device is running on battery and charge is below 50 percent.		Device is running on battery and charge is below 25 percent.
	Device is running on battery and charge is below 10 percent. Device blinks with alternating icons.		Device is connected to a power supply and is docked.

Introduction

Intended use

The Welch Allyn RetinaVue 100 Imager is a digital hand-held eye-fundus camera used to record digital photographs of the fundus (including retina, macula and optic disc) of the human eye and surrounding area.

About warnings and cautions

Warning and caution statements can appear on the RetinaVue 100 Imager device, the packaging, the shipping container, or in this *Directions for use*.

The RetinaVue 100 Imager is safe for patients and clinicians when used in accordance with the instructions and the warning and caution statements presented in this *Directions for use*.

Before using the device, you must familiarize yourself with all warnings and cautions, with the steps to power up the device, and with the sections of this *Directions for use* that pertain to your use of the device. Specific warnings and cautions are also found throughout this manual.

- Failure to understand and observe any warning statement in this manual could lead to patient injury or illness.
- Failure to understand and observe any caution statement in this manual could lead to damage to the equipment or other property, or loss of patient data.

General warnings and cautions

WARNING Clean the eye cup after each patient to avoid the risk of cross-contamination.

WARNING Operating the device in the presence of a flammable anesthetic mixture with air, oxygen, or nitrous oxide; in oxygen-enriched environments; or in any other potentially explosive environment may cause a fire and explosion hazard.

WARNING Do not use batteries from other sources. This may result in excessive temperatures, fire, or explosion.

WARNING To prevent fire or electrical shock, do not expose the device to rain or moisture.

CAUTION Avoid subjecting the device to vibration or shock.

CAUTION Avoid using the device in a dusty environment.

CAUTION Keep the power cord away from any heat source.

CAUTION Do not sterilize the device.

CAUTION All servicing of this equipment is to be performed by Welch Allyn, Inc. or by a center approved by Welch Allyn, Inc.

CAUTION This device needs to be installed and put into service according to the EMC information provided herein.

CAUTION Portable and mobile RF communications equipment can affect the RetinaVue 100 Imager performance.

CAUTION Input overload can occur in proximity to defibrillator or electrocautery devices.

CAUTION This device is not protected against the ingress of water and should not be used in the presence of liquids which may enter the device.

CAUTION Results deleted on the device cannot be recovered.

CAUTION Do not modify this equipment without authorization of the manufacturer.

CAUTION Do not use the device in direct sunlight. Strong ambient light may affect results.

CAUTION Only connect the RetinaVue 100 Imager to computers or laptops that have passed the safety standard for information technology equipment IEC 60950-1, EN 60950-1, UL 60950-1 to ensure the safety of the USB electrical connection.

CAUTION Do not turn off the device while saving data from a patient test. Turning off the device while saving patient data may delete the data.

CAUTION Do not use the device adjacent to or stacked with other equipment. If the device is used adjacent or stacked with other equipment, the device should be observed to verify normal operation in the configuration in which it will be used.

CAUTION Do not submerge the device in liquid or allow liquid to enter the interior of the device.

CAUTION Do not use automatic cleansing machines or sterilization.

CAUTION Consult the cleaning agent and germicidal cleaner agent manufacturer instructions for their proper use and germicidal efficacy prior to their use.

CAUTION Only use the cleaning or germicidal cleaner agent types listed or damage may occur.

Controls and connectors

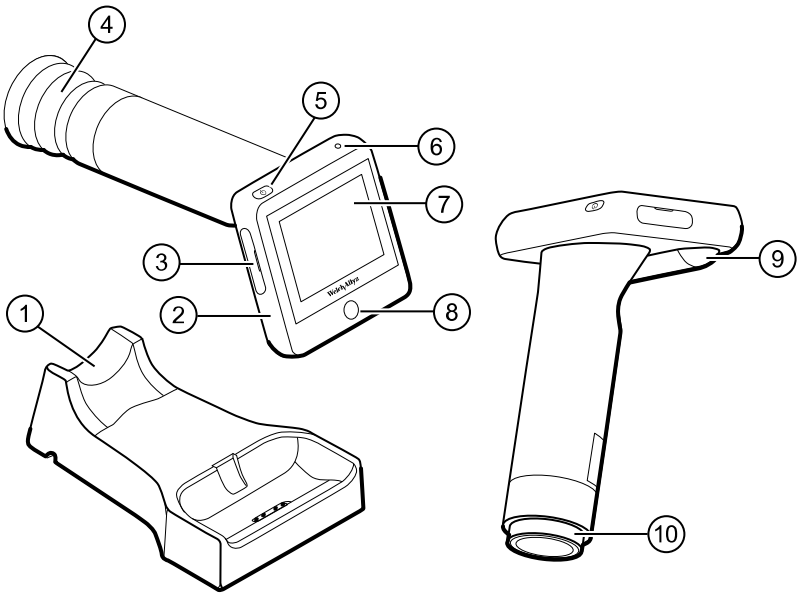

No.	Feature	Description
1	Docking station	Charges the RetinaVue 100 Imager and enables data transfer to a PC running the RetinaVue™ Network software. (Requires optional software). Connect to an electrical outlet or to a USB port of a computer.
2	RetinaVue 100 Imager device	Digital hand-held eye-fundus camera used to record digital photographs of the fundus of the human eye and surrounding area.
3	SD Card port	SD Card slot. Insert SD Card for data storage.
4	Eye cup	Blocks ambient light during testing
5	Power button	Push button to turn the device on and off.
6	Power indicator	• When the LED light is green, it indicates that the device is docked and is fully powered. • When the LED light is amber, it indicates that the device is docked and is in the process of charging. • When the device is not docked the LED is off.
7	LCD touchscreen	3.5" color HD LCD touchscreen. Displays information for charging, testing, and adjustments to the device.
8	Home button	Press the Home button to navigate to the Home screen (workflow selection) from any screen on the device.
9	Battery cover	Covers the battery compartment
10	Bezel	Area to which the eye cup attaches

RetinaVue 100 Imager Home screen

The RetinaVue 100 Imager *Home screen* includes the following areas:

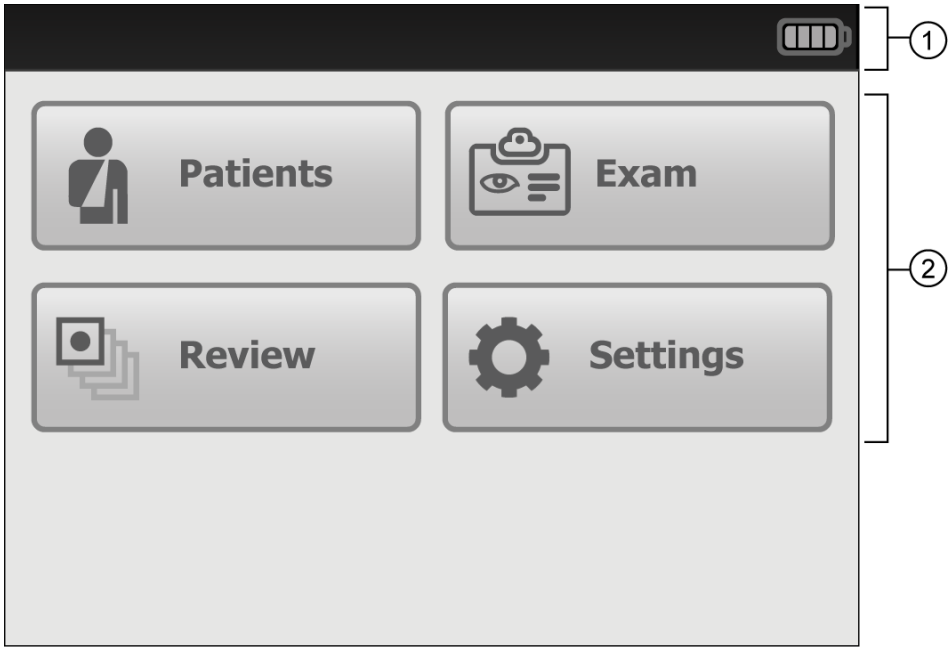

Item	Area
1	Device status
2	Content

Device Status Area

The Device Status Area, located at the top of the *Home screen*, displays the Battery condition. Estimated battery capacity is displayed in a charged or discharged status format.

In the *Exam Summary* and *Review screens*, the Device Status Area displays:

- Patient Icon and Patient name. The format of the Patient name is last name, first name.
- Connection status. The icons indicate which connection type, if any, is currently active.

Note Your model might not contain all of these features.

Icon	Connection type
	USB

- Battery condition. Estimated battery capacity is displayed in a charged or discharged status format.

Content Area

The Content Area includes four workflow selection buttons. Touching one of the four buttons navigates to the next screen associated with that workflow.

- **Patients:** Presents a list of patients created on the RetinaVue 100 Imager or transferred from the RetinaVue™ Network (requires optional software).
- **Exam:** The Exam workflow provides a guided approach to image capture. To maintain consistent and complete exam submissions, a prescribed image acquisition sequence is used to complete an exam. The Exam workflow also presents controls, status, and previews of images. (The Exam Workflow requires optional RetinaVue™ Network software to submit images to an overread service.)
- **Review:** Presents images and exams from a list of patients contained on the RetinaVue 100 Imager.
- **Settings.** Provides controls to view or change the following:
  - Volume
  - Time
  - Date
  - Advanced Settings:
    - Device access code
    - Advanced settings code
    - Format SD
    - Factory reset
    - Export log
- About
  - Software Version

Navigation controls in the Exam mode

The Navigation area is located at the bottom of the RetinaVue 100 Imager screen. Navigation controls change with the mode. The navigation controls for Pre-, post-, and acquisition in Exam mode include:

Pre-acquisition

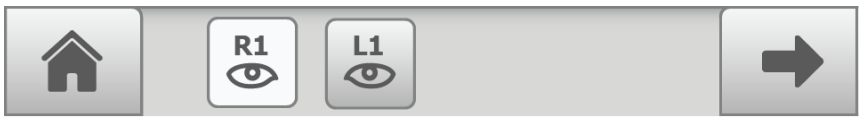

Home: Displays the RetinaVue 100 Imager workflow selection buttons and navigates to the *Home screen*.

Next: Navigates to the next image acquisition within a prescribed image acquisition sequence or to the next step in a sequence of steps.

Image acquisition navigation: Navigates to the image acquisition position within the prescribed sequence. Provides a visual representation of the prescribed sequential acquisition, including the right eye ( ) and the left eye ( ). Provides a status of acquired images for acceptance or dismissal.

Acquisition

Exit: Navigates to the *Pre-acquisition screen*.

Post-acquisition

Discard image: or Navigates to the *Acquisition screen*.

Accept image: Navigates to the *Exam summary screen* when the last exam in the sequence has been accepted.

Image inspection: Navigates to the *Image inspection screen*.

Navigation controls in the Review mode and Settings mode

The Navigation area is located at the bottom of the RetinaVue 100 Imager screen. The navigation control for the Review mode and the Settings mode includes the back button.

Back: Navigates to a previous dialog or step.

Image Pre-acquisition controls (Auto mode)

From the *Home screen* touch **Exam**. The Exam *Pre-acquisition screen* appears.

No.	Feature	No.	Feature
1.	**START** enters automatic image acquisition mode.	4.	Navigates to the *Home screen*.
2.	(Image Acquisition Settings) navigates to the *Advanced image capture settings* screen. Adjust the flash brightness (-2 to +2) or the focus settings (-1 to +1).	5.	**MANUAL** switches to advanced image capture options.
3.	(Image Order) skips to the next image in the sequence.	6.	(Next) skips to the next image acquisition within a prescribed image acquisition sequence or navigates to the *Exam summary screen* if the last image has been acquired.

About image quality scores

Good quality green	If the image is of good quality, it is very likely to be read by a specialist. (Scores of 40 +)
Acceptable quality yellow	If the image is of good enough quality, it is likely to be read by a specialist. (Range of 20 — 39)
Unacceptable quality red	If the image is lacking in quality, it is highly unlikely that a specialist will be able to read it. (Range of 0 — 19)

Controls (Post-acquisition)

On the *Post-acquisition screen*, images with a green check ( ) are of good quality (scores of 40 +), images with a yellow check ( ) are of acceptable quality (scores of 20 — 39), and those with a red x ( ) are of unacceptable quality (scores of 0 — 19).

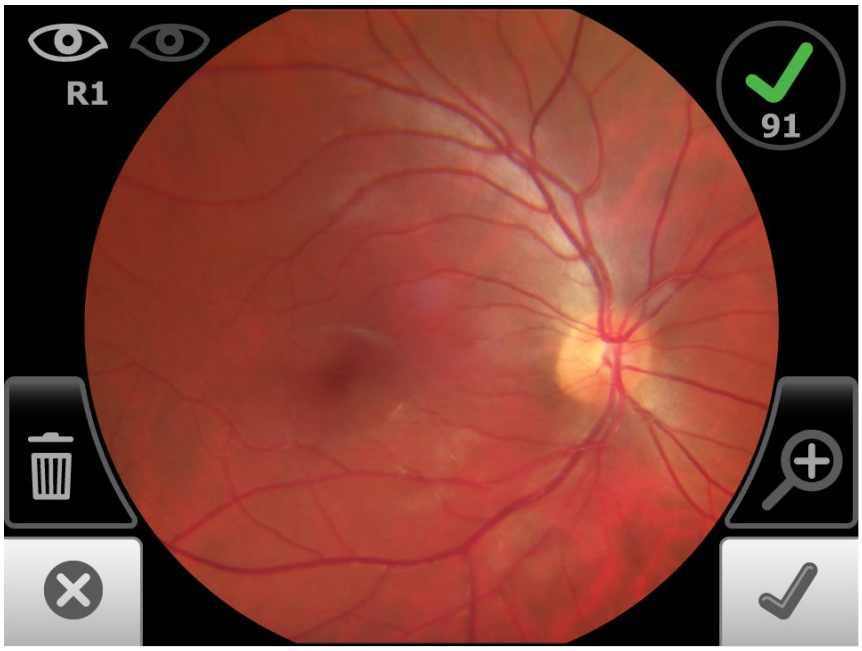

Use the RetinaVue 100 Imager touchscreen inspection control to navigate to the *Inspection screen*, then zoom in or out with a pinch or pull. Touch (Close) to return to the *Post-acquisition screen* and accept or reject the acquired image.

On the *Post-acquisition screen*, touch (Trash) or (Discard) to discard the image. At the dialogue screen, touch **Delete** to confirm the discard and to return to the *Pre-acquisition screen* to acquire again.

Touch (Accept) to accept the image and to navigate to the next image. Or touch (Accept) to navigate to the *Exam summary screen* once the last image of the exam is acquired.

Exam summary controls (Post-acquisition and Review modes)

Exam summary from the *Post-acquisition screen*

From the *Post-acquisition screen*, touch (Accept) to navigate to the *Exam summary screen*. Each image on the *Exam summary screen* contains a quality score and status. If an image is missing touch **Override** to access the Save button and to save the one image.

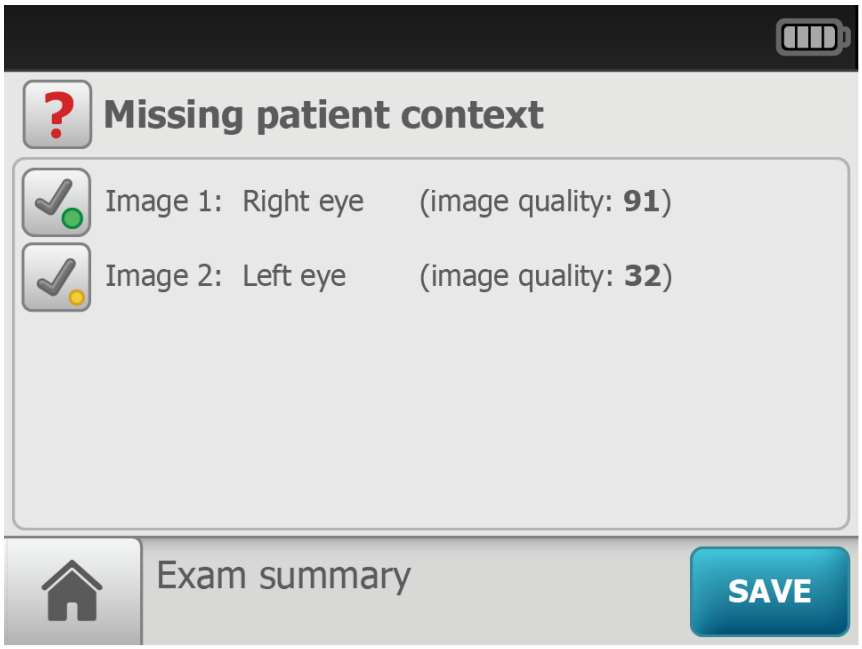

Touch (Accepted good) to view that image.
Image accepted, good quality. Quality scores of 40+.

Touch (Accepted OK) to view that image.

Image accepted, quality OK. Quality scores ranging from 20 — 39.

Touch (Rejected) to view that image.

Image rejected. Quality scores ranging from 0 — 19.

Touch **SAVE** to accept all images and to return to the *Home screen*.

CAUTION Captured images require patient context before the images can be saved.

Note To add missing patient context information touch and then touch to create a new patient, or touch on an existing patient's name from within the *Patients screen* to select that patient.

Exam summary from the *Review screen*

Touch **Review**.

Touch on a patient's name. The *Exam summary screen* appears for that patient.

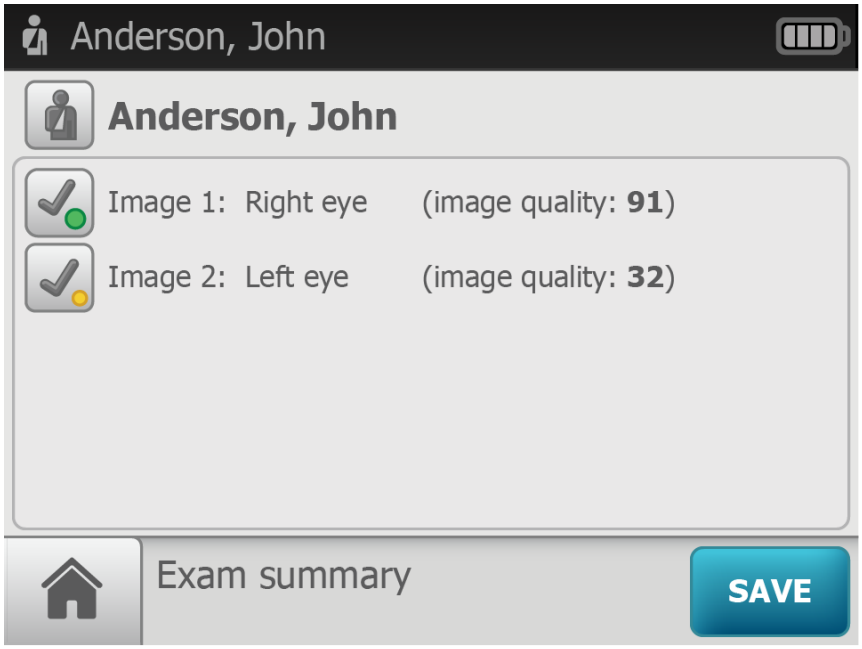

Touch (Accepted good), (Accepted OK) , or (Rejected) to view the image.

Touch (Patient) to review patient demographics on the *Patient summary* screen.

Touch (Back) to return to the *Review screen.*

Touch (Home) to return to the *Home screen*.

About the Auto and Manual Exam modes

Auto Mode

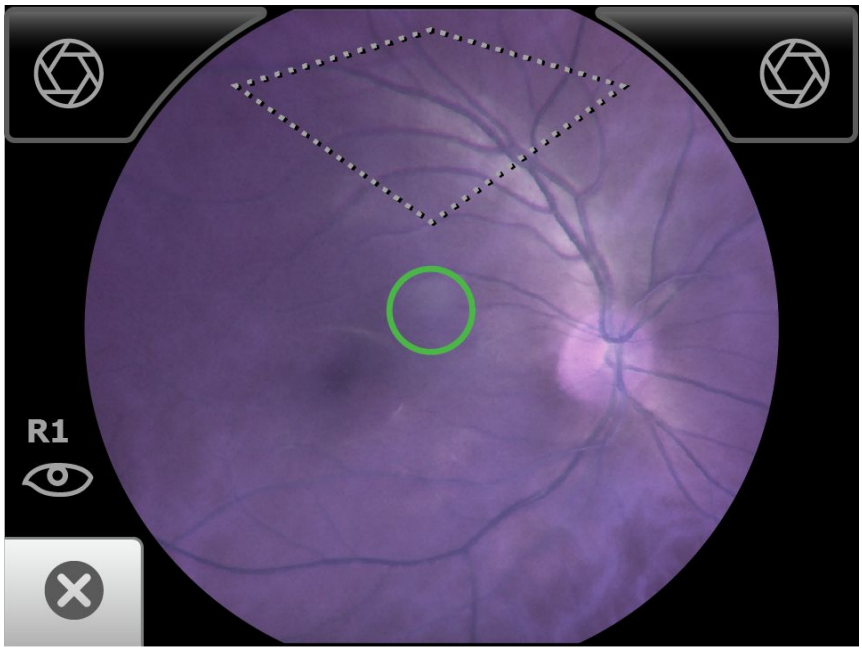

Auto Mode is the default image capture mode. Available automatic features include:

- Image capture
- Focus
- Flash brightness
- Sequential image capture order of the right and left eye
- Navigation to the image *Inspection screen*

In addition to the automatic features, manual capture, manual focus adjustment, and manual flash brightness adjustment are also available. (Manual focus adjustment and flash brightness are accessed from the *Advanced image capture settings screen*.)

Manual Mode

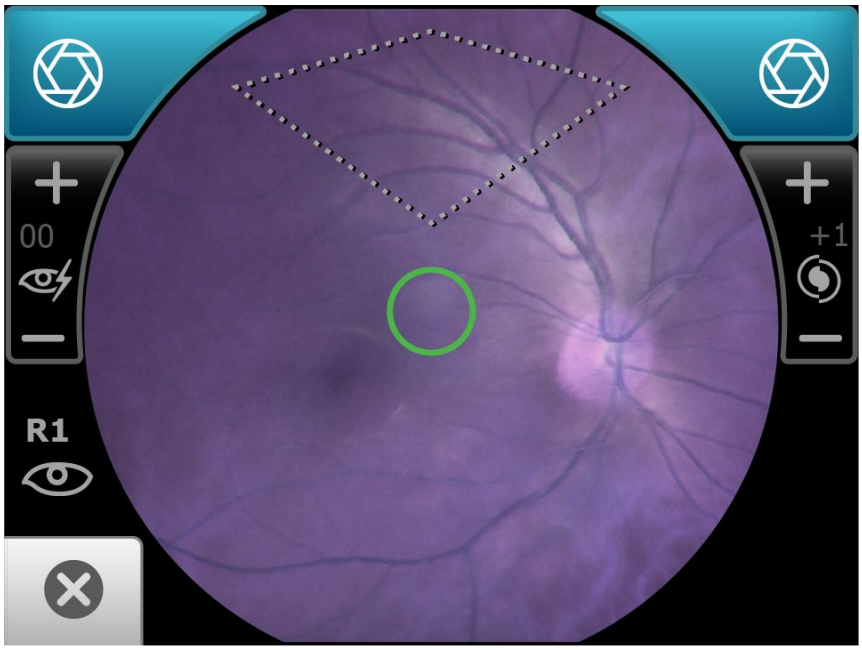

Manual mode contains advanced image capture options.

Note A manual touch of the capture button is required to obtain an image.

Available manual features include:

- Focus adjustment (values range from -1 to +1)
- Flash brightness adjustment (values range from -2 to +2)
- Image capture

Using the RetinaVue 100 Imager

View images saved to the RetinaVue 100 Imager on the LCD touchscreen. The images saved on the SD card are encrypted. To view the images on the PC, install the RetinaVue Network software. For information on the RetinaVue Network Software visit www.RetinaVue.com.

Unpack the system

The RetinaVue 100 Imager device is packaged with the following items. Confirm that all items are included.

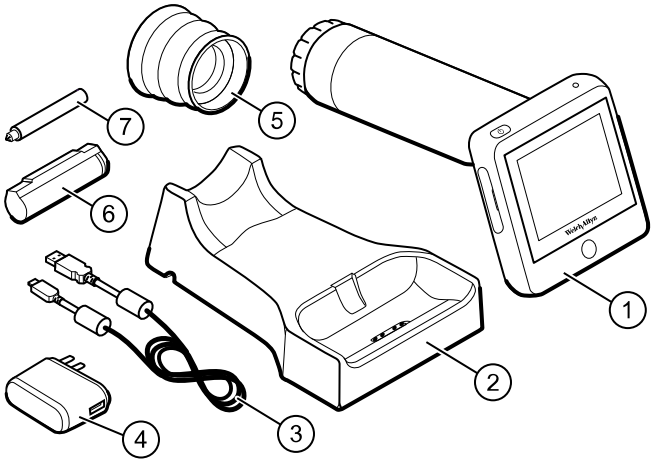

Number	Item	Description
1	RetinaVue 100 Imager device	Digital hand-held eye-fundus camera used to record digital photographs and video of the fundus of the human eye and surrounding area.
2	Docking station	Charges the RetinaVue 100 Imager device and enables USB data transfer to a computer or laptop. Connect to region-specific AC wall outlet.
3	USB cable	Connects the docking station to a computer or laptop to transfer results. Connects the docking station to the wall adapter plug for AC charging.
4	Wall adapter plug	Connects to USB cable. Match to region-specific AC wall outlet.

Number	Item	Description
5	Eye cup	Blocks ambient light during testing
6	Battery	Rechargeable lithium ion battery
7	Screwdriver	Phillips screwdriver to remove battery cover screws
Not shown	RetinaVue 100 Imager *Directions for use*	This document. The *Directions for use* (DFU) is also available on the Welch Allyn web site.
Not shown	SD Card	SD Card installed in the SD Card slot for data storage
Not shown	Lens spray	RetinaVue 100 Imager lens cleaner
Not shown	Lens Cloth	RetinaVue 100 Imager lens cleaning cloth

If any item is missing, contact Welch Allyn Technical Support: www.welchallyn.com/service. We recommend that you save the shipping box and packing materials in case you need to store or ship the system.

Battery installation and replacement

Use the device on battery power once the battery is installed and charged. The battery is charged through contact pins on the device and the docking station.

Install the battery/replace the battery

Set the RetinaVue 100 Imager on a flat, clean surface with the LED display facing down.

WARNING Personal injury risk. Improper handling of the battery can lead to heat generation, smoke, explosion, or fire. Do not short-circuit, crush, incinerate, or disassemble the battery. Never dispose of batteries in refuse containers. Always recycle batteries according to national or local regulations.

WARNING Use only Welch Allyn approved accessories, and use them according to the manufacturer's directions for use. Using unapproved accessories with the camera can affect patient and operator safety and can compromise product performance and accuracy, and void the product warranty.

1. Loosen the screw at the left side of the battery cover.
2. Loosen the screw at the right side of the battery cover.
3. Push in the battery cover tab and then lift up the battery cover. Slide open the battery cover by tilting the cover upward.

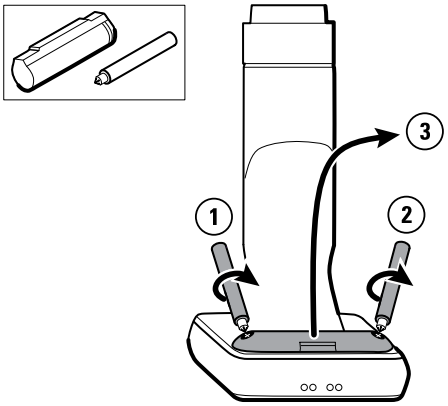

4. For first-time setup of the RetinaVue 100 Imager, insert the battery into the battery compartment. For battery replacement, remove the existing battery and then insert the new replacement battery into the battery compartment.
   a. This procedure applies to first-time setup of the RetinaVue 100 Imager. Insert the battery into the battery compartment. Match the polarity of the battery to the + and - markings on the RetinaVue 100 Imager.
   b. This procedure only applies to battery replacement. Remove the existing battery from the battery compartment and insert the new replacement battery into the battery compartment. Match the polarity of the battery to the + and - markings on the RetinaVue 100 Imager.
5. Rotate the raised flat edge of the battery until it sets in the back notch of the battery compartment.

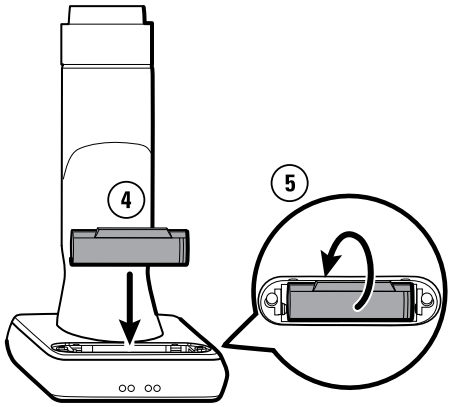

6. Insert the two battery cover tabs into the slot, then push in the tab to close the battery compartment.
7. Tighten the screw at the left side of the battery cover.
8. Tighten the screw at the right side of the battery cover.

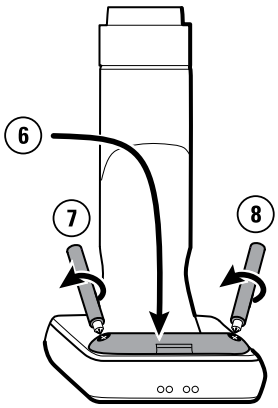

Note Do not over-tighten the screws.

Eye cup

The eye cup blocks ambient light during testing and covers the patient's eye socket to allow them to best focus on the green fixation lights. The eye cup works on the patient's left and right eye.

Set up the eye cup for a patient exam

1. Remove the lens cap from the RetinaVue 100 Imager.

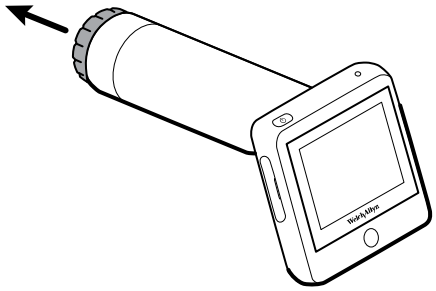

2. Slide the eye cup over the bezel on the RetinaVue 100 Imager.

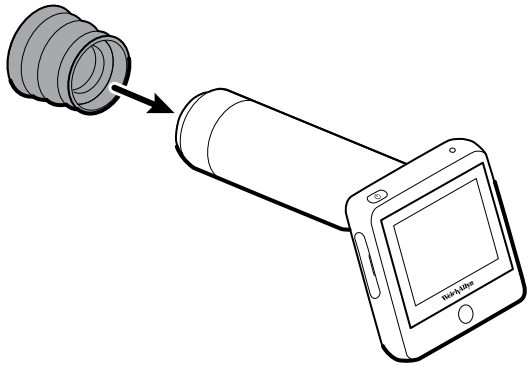

3. Use the eye cup to cover the patient's examined eye and allow them to focus on the green fixation lights.

Hold the RetinaVue 100 Imager for a patient exam

The RetinaVue 100 Imager must be held level and in line with your patient's eye.

There are two recommended techniques to properly hold the RetinaVue 100 Imager for a quick and successful retinal exam:

Telescope Grip

Smart phone Grip

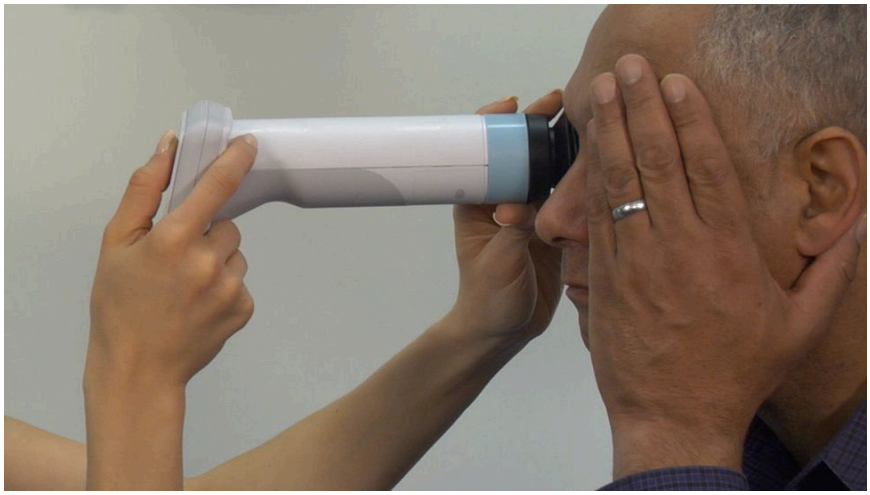

Guide (Patient End) Hand

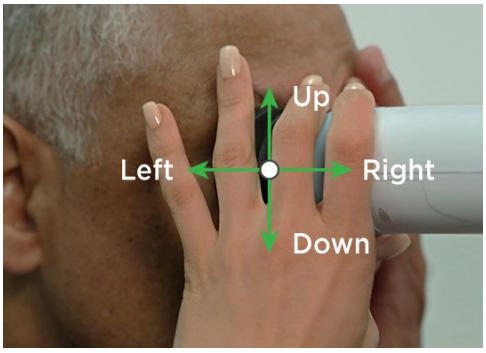

Make micro adjustments with your guide hand to fine tune the focus of the RetinaVue 100 Imager.

Hold the patient end of the RetinaVue 100 Imager with just the thumb and forefinger. Use the small and ring finger to steady the RetinaVue 100 Imager by anchoring them gently on the patient's forehead.

Docking station

Place the device in the docking station to charge the device or to connect and transfer data to a computer or laptop PC running the RetinaVue Network™ Client software. (Requires optional software).

Set up the docking station for charging

1. Turn the docking station over.

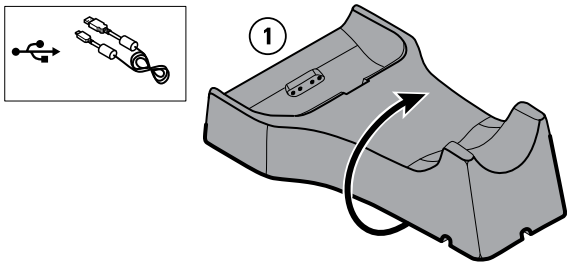

2. Connect the USB cable to the docking station.
3. Either plug the USB cable into the wall adapter plug and then plug the wall adapter into an AC outlet, or plug the USB cable into an open USB port on a computer.
   a. Plug the USB cable into the wall adapter plug and then plug the wall adapter into an AC outlet.

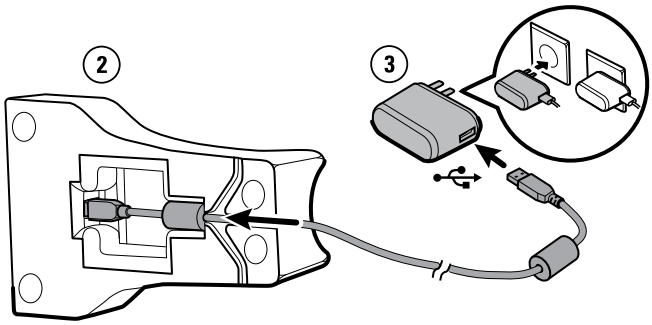

   b. (Optional) Plug the USB cable into an open USB port on a computer.

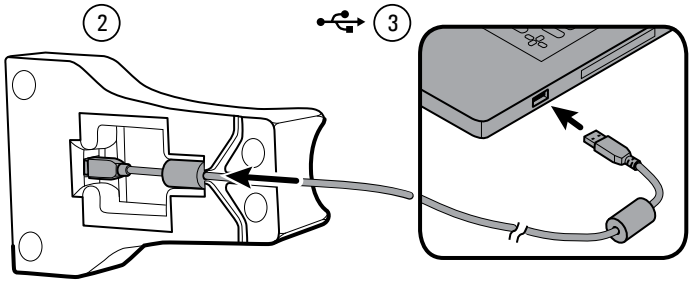

4. Place the RetinaVue 100 Imager on the docking station charger with the contact pins of the RetinaVue 100 Imager touching the contact pins of the docking station charger.

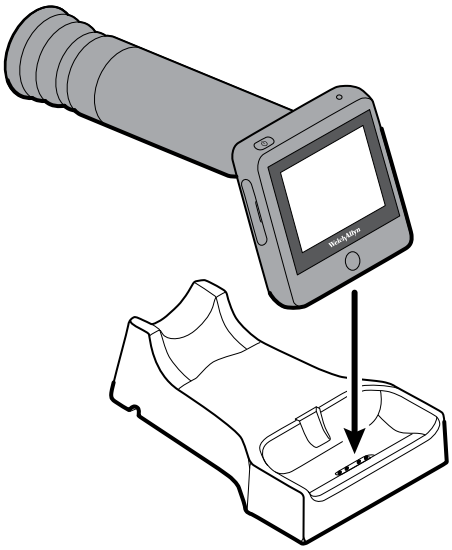

5. Before the first use, allow the RetinaVue 100 Imager to charge for 8 hours on the docking station charger.

Note The power indicator light turns amber to indicate that the RetinaVue 100 Imager is in the processing of charging. If the power indicator light does not turn on, ensure that the contact pins of the RetinaVue 100 Imager are touching the contact pins of the docking station charger and reseat the RetinaVue 100 Imager into the docking station. Charging is impacted if the pins are not properly touching.

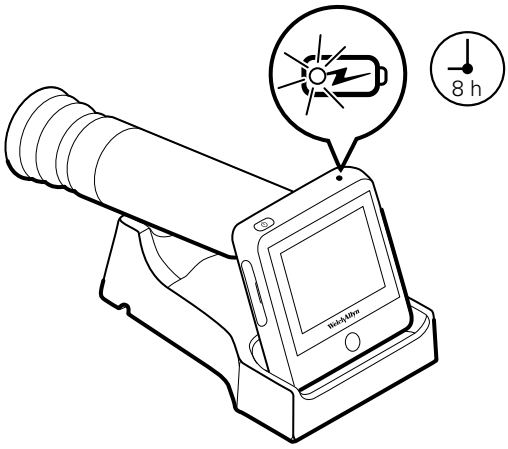

Patient data management

To create a new patient:

1. From from the *Home screen*, touch **Patients**. The *Patients screen* appears.

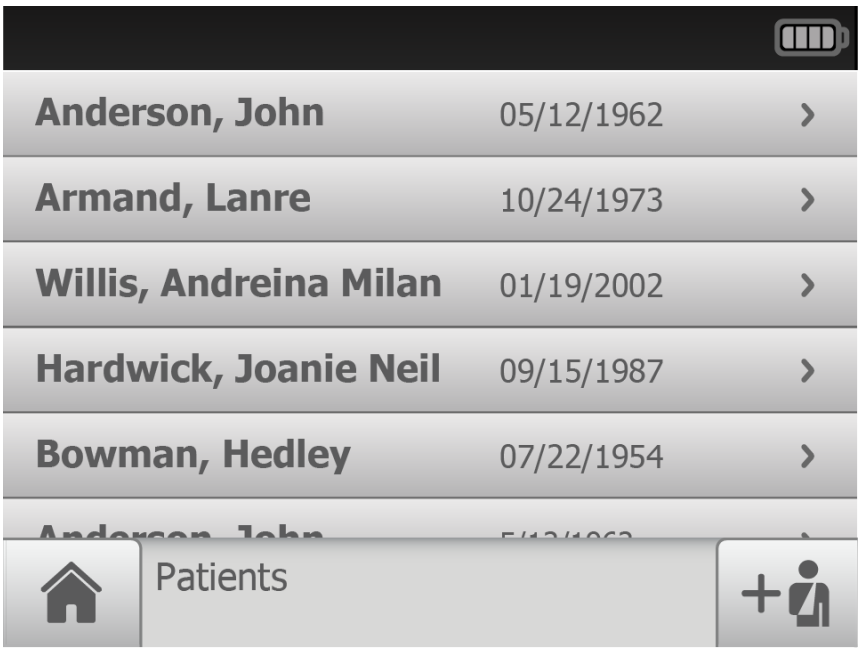

2. Touch (New patient). The *New Patient screen* appears. Required fields are noted with a red asterisk.

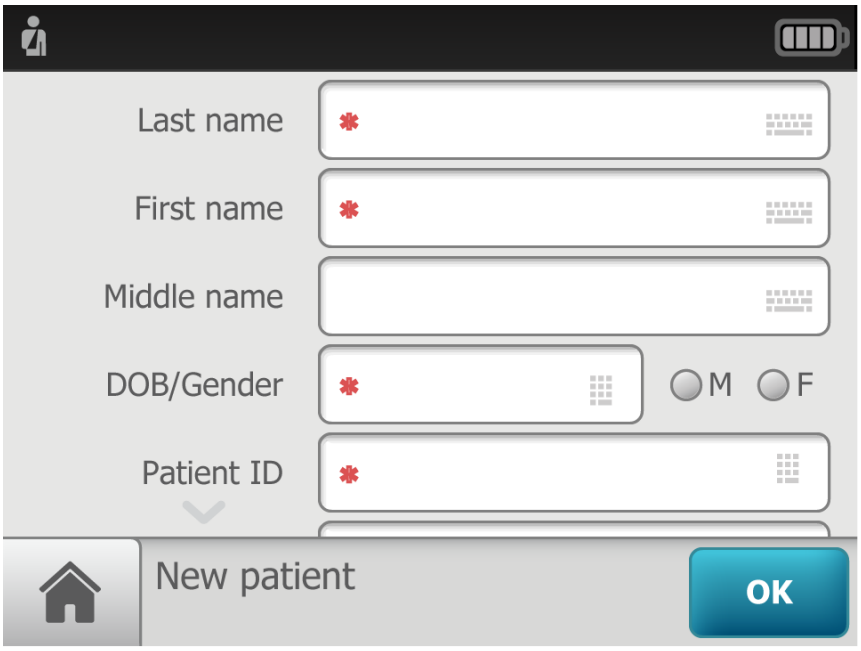

3. Touch within the Patient's Last name, First name , or Middle name entry box to launch the on-screen keyboard.
4. Enter the patient's last name and first name. Touch **OK**. (Middle name is optional.)

5. Enter the patient's Date of Birth. (Touch within the DOB/Gender field to launch the on-screen keyboard and to enter the patient's Date of Birth.) Touch **OK**.
6. Enter the patient's gender using the radio button to select male or female.
7. Enter the patient's ID. Touch **OK**.
8. Once all the required fields are complete, touch **OK** to open a new exam.

To select a patient from the Patient list:

1. From from the *Home screen*, touch **Patients**. The *Patients screen* appears.

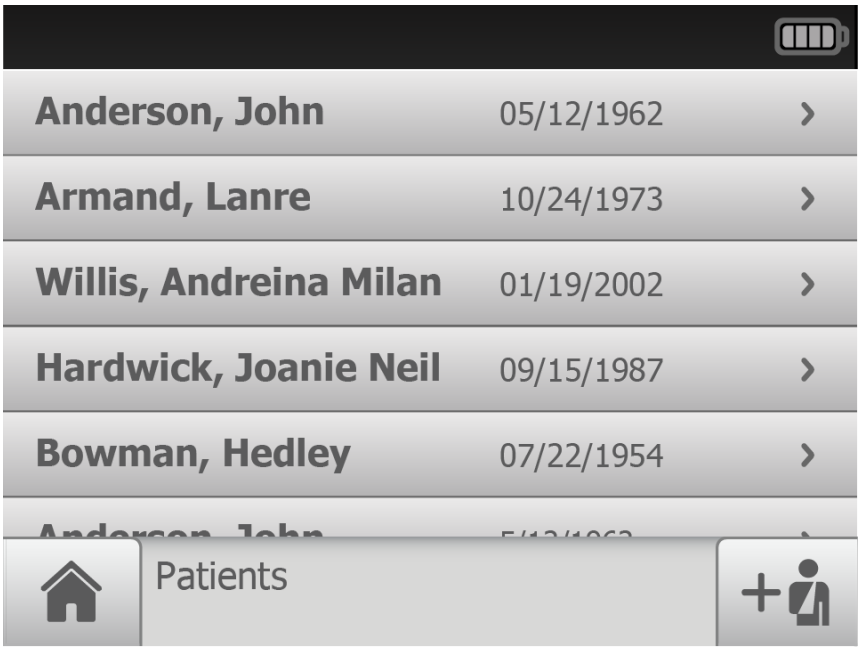

2. Touch the Patient's name to view a summary of the patient information on the *Patient Summary screen*.

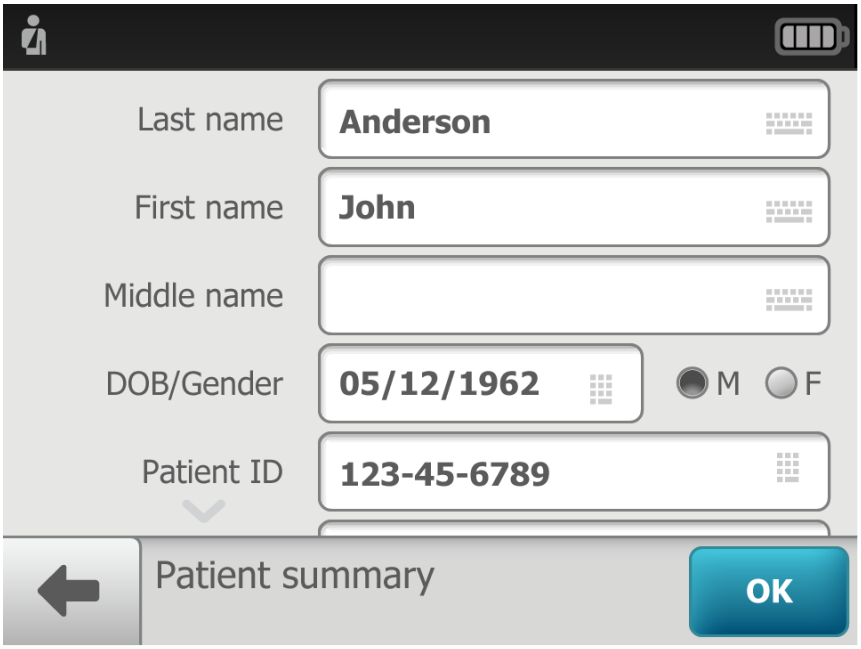

3. Touch **OK** to open a new exam for that patient.

Review patient tests:

1. From the *Home screen*, touch **Review**. The patient's *Review screen* appears.

2. Touch on a patient's information to review the patient demographics and to view images associated with a patient.
3. The most current set of images associated with a patient appears on the *Exam summary screen*.

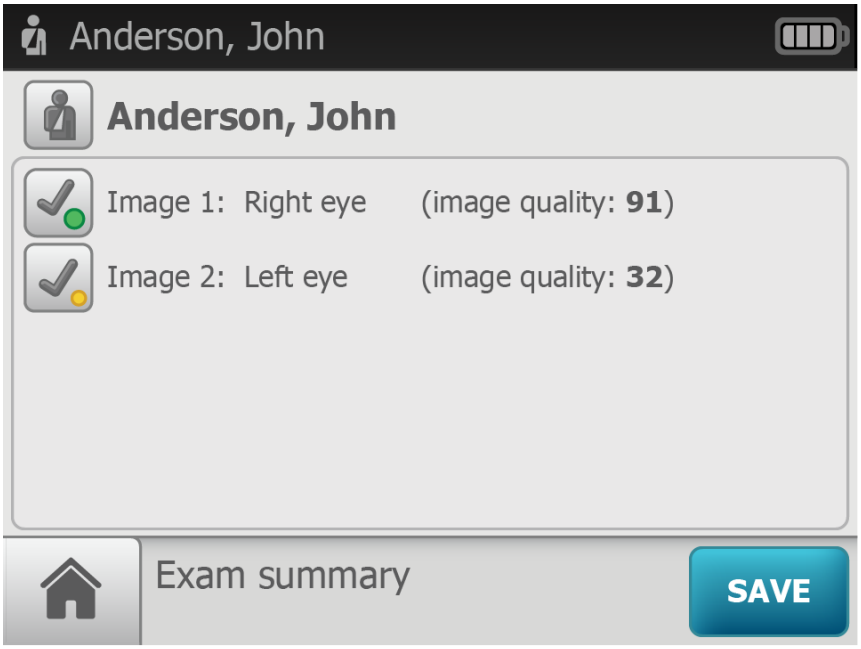

4. After the review is complete, touch (Back) to return to the *Review screen* and then touch (Home) to return to the *Home screen*.

Perform an eye exam using the Auto exam mode

Auto exam mode is the default image capture mode.

Available automatic features include:

- Image capture
- Focus adjustment
- Flash brightness adjustment
- Sequential image capture order of the right and left eye
- Navigation to the image Inspection screen
  - In addition to automatic image capture, manual capture is also available.

Note To ensure that the patient's pupils sufficiently dilate to at least 3.5 mm diameter, adjust the room lighting to the lowest possible level. If necessary, have the patient sit in a dark room for 5 minutes to dilate their pupils.

- Ensure that the SD card is installed into the RetinaVue 100 Imager.
- Ask your patient to remove their glasses, contacts can remain in place.
- Ensure that the patient sits on the edge of an exam table and stand in front of the patient to take the image. Alternatively, ask the patient to sit in a chair and sit directly across from the patient with your legs together on the same side as the examined eye.

- Ask the patient to sit up straight and hold their head in a stationary position during the entire procedure.
- Ensure that the patient is sitting in a position that allows for a straight and level approach of the RetinaVue 100 Imager into the patient's eyes. A stable approach minimizes the loss of the view of the eye and repeated image capture attempts.
- Keep the RetinaVue 100 Imager lens the same height as the patient's examined eye.
- Approach the patient from directly in front of the examined eye.

- Make slight, micro adjustments with your guide hand to fine tune the position of the RetinaVue 100 Imager. Do not use your hand on the LCD side to make minor adjustments.

Note For additional information about techniques to capture the highest quality image, see the *Technique guide* that came with the RetinaVue 100 Imager.

1. Press the power button .

   Note To conserve power, the RetinaVue 100 Imager enters stand by mode and returns to the Home screen if it remains idle for approximately two minutes. Touch the LCD screen to wake up the RetinaVue 100 Imager from stand by mode.

   Note After 10 minutes of inactivity in stand by mode, the RetinaVue 100 Imager powers down. Press the Home button to activate the RetinaVue 100 Imager.

2. From the Home screen, touch **Exam**.

   The *Preacquistion screen* appears.

3. (Optional), If necessary, touch (Settings) to adjust the illumination, or the focus. Touch the up or down arrows in the *Advanced image capture settings* and touch **OK**.
4. Touch **Start** to enter the *Image acquisition mode* and begin the first exam of the patient's right eye (R1).

The *Exam acquisition screen* appears.

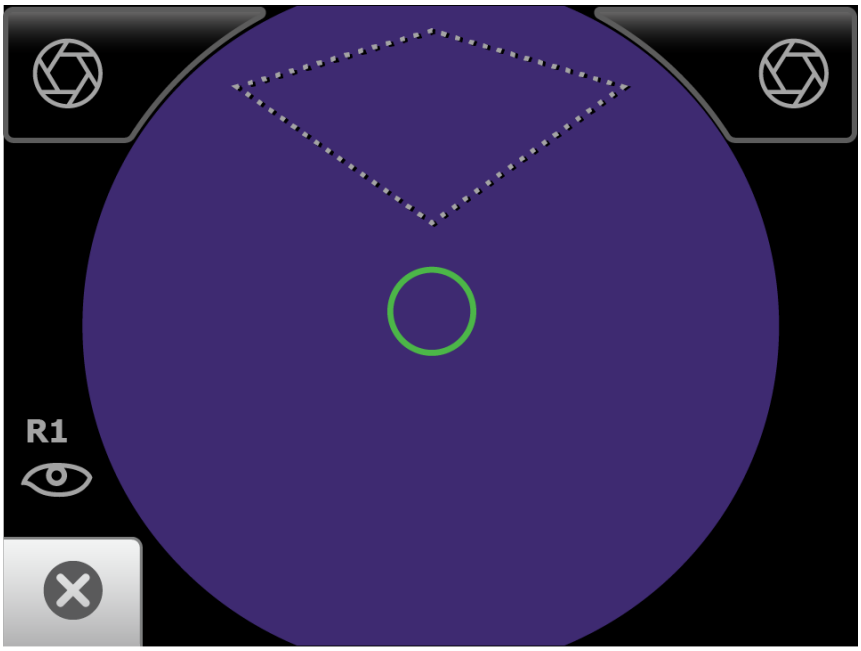

5. Hold the patient end of the RetinaVue 100 Imager two to three inches directly in front of the patient's examined eye. Continue forward to compress the eye cup against the examined eye.

WARNING Clean the eye cup after each patient to avoid the risk of cross-contamination.

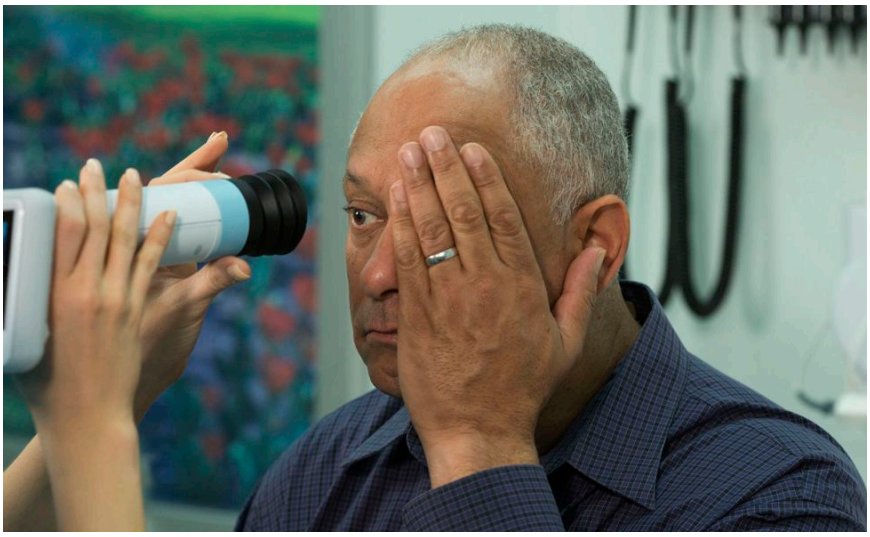

6. Direct the patient to focus on the green fixation lights inside the barrel of the RetinaVue 100 Imager.

Note Instruct the patient to cover, but not close, their unexamined eye. This will help the patient to focus on the green fixations lights.

7. Look for a white circular reflection at the top of the eye's image on the LCD touchscreen. This is your initial target.

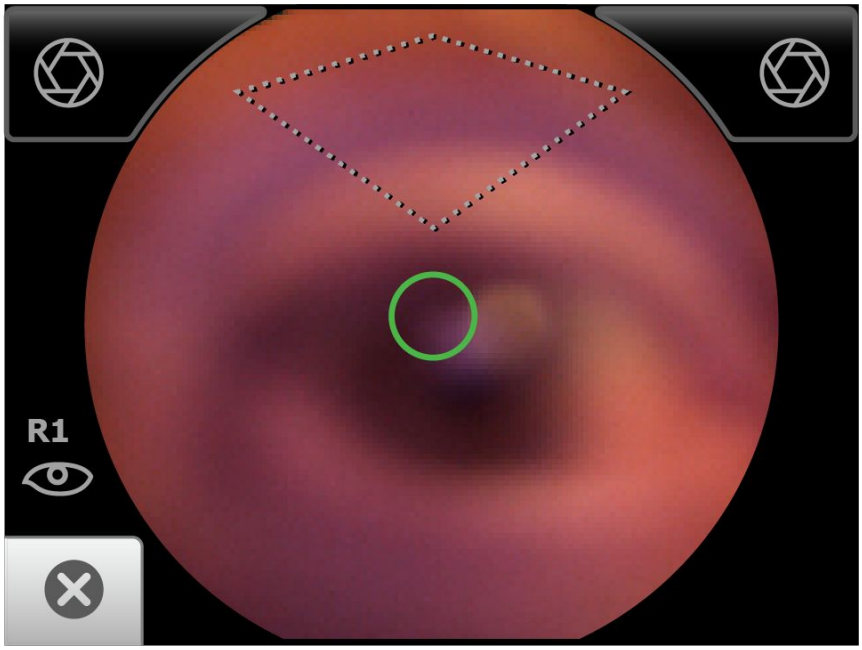

8. Guide the green circle on the RetinaVue 100 Imager LCD touchscreen towards the initial target by slowly moving the RetinaVue 100 Imager towards the eye.

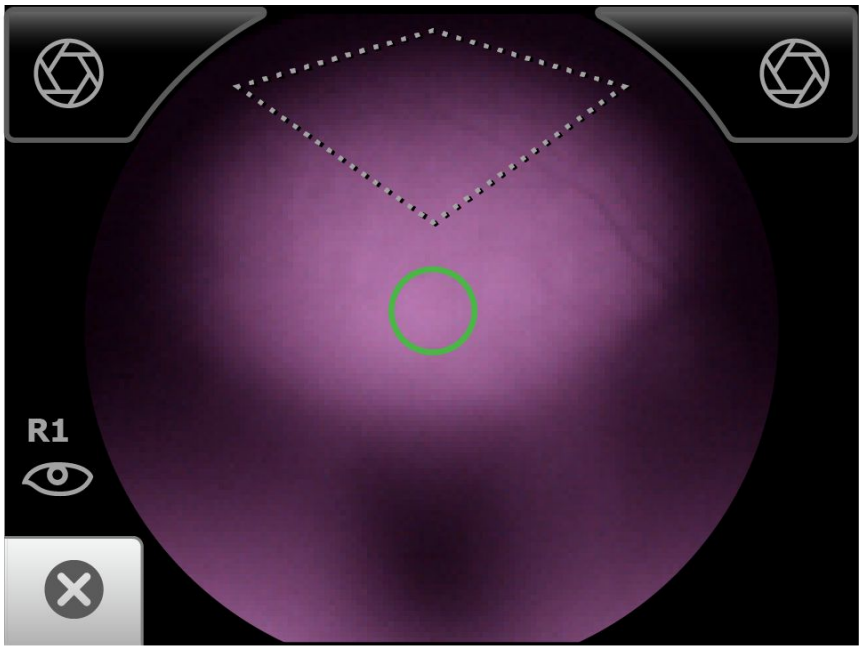

9. Once the reflection has filled the screen, push slightly forward until a “bubble” appears.
10. Keep the RetinaVue 100 Imager in line. Slightly adjust the RetinaVue 100 Imager away from any shadows that appear.
11. Move the patient end of the RetinaVue 100 Imager toward the bubble.

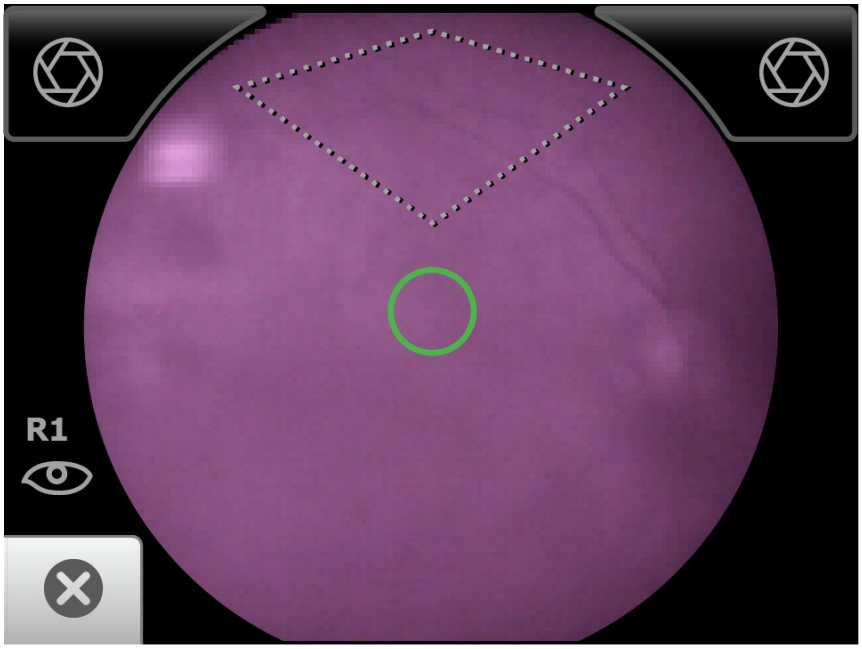

12. Align the bubble inside the diamond icon.

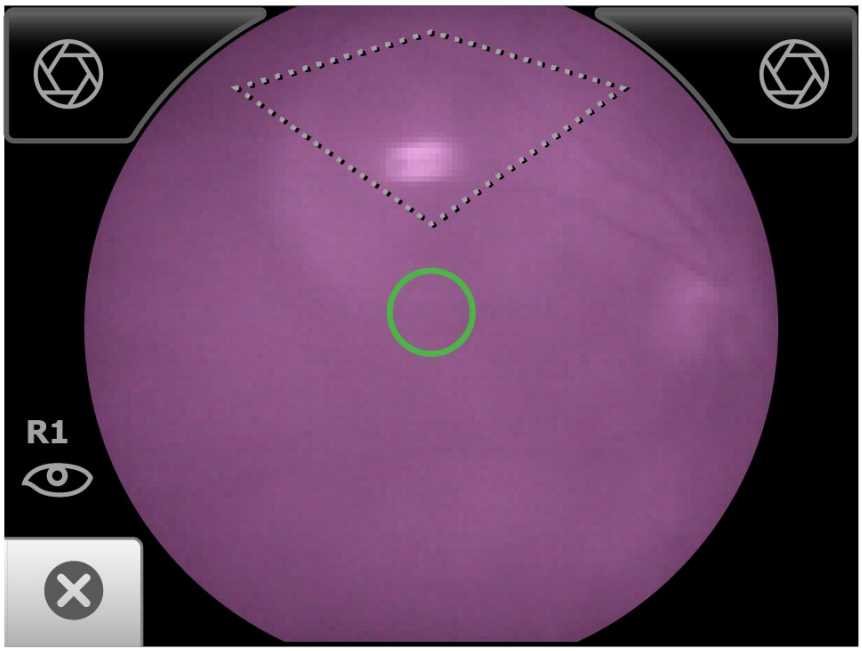

13. An audible tone alerts you that the image has been captured.

    The acquired image appears on the LCD touchscreen for review in about five seconds.

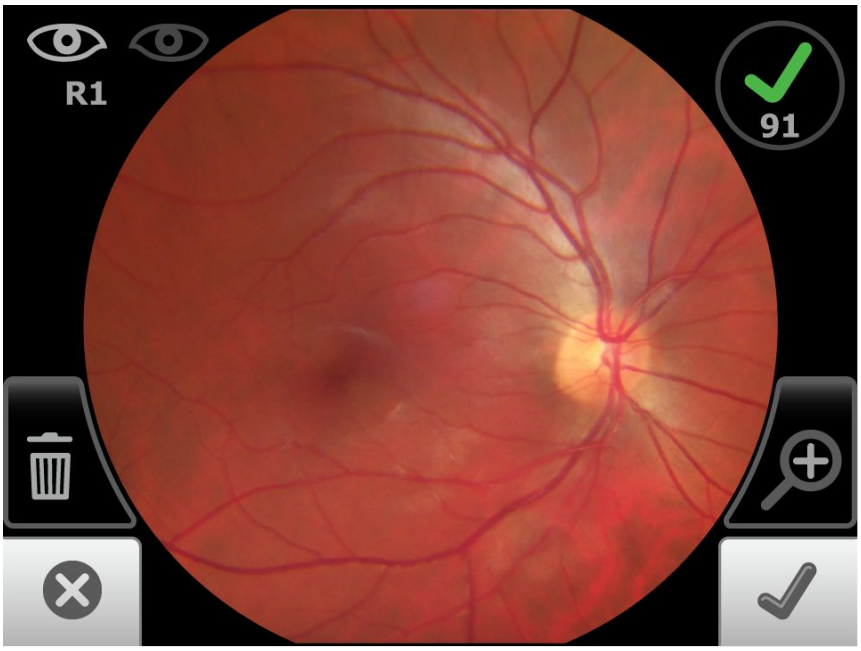

14. Touch (Accept) to begin the second exam of the patient's left eye (L1) and repeat the steps until the second image is automatically captured.

Note Touch to review the current image. Images with a red X ( ) denote low quality images. Touch or to dispose of an image and touch **START** to begin a capture of a replacement image.

15. When the two images are captured and contain a green quality acceptance check mark, proceed to the *Exam summary screen*.

Note To add missing patient context information touch and then touch to create a new patient, or touch on an existing patient's name from within the *Patients screen* to select that patient. Touch **Save** to save the exam images.

Perform a manual image capture while in Auto exam mode

1. From the *Pre-acquisition screen*, touch **Start**.
2. Touch or (image capture) to manually capture an image.

   An audible tone alerts you that the image has been captured. The acquired image appears on the LCD touchscreen for review in about five seconds.

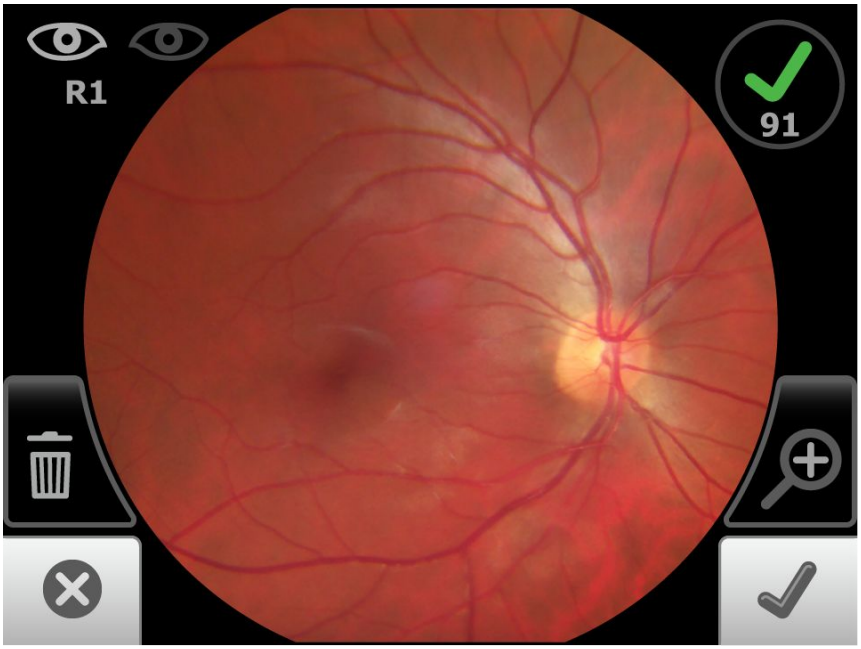

Skip an image capture while in Auto exam mode

1. From the Home screen, touch **Exam**.

   The *Pre-acquistion screen* appears.

2. Touch (Next) or touch (Image Order) to skip to the next image in the sequence.
3. Touch **Start** to enter *Image acquisition mode* and begin the exam of the patient's eye using the next image in the sequence. The *Exam acquisition screen* appears.
4. If this is the last image in the sequence, touch (Accept) on the *Image inspection screen* and navigate to the *Exam summary screen*. For a single image, touch Override to access the Save button and to save the image.

Perform a manual image capture while in Manual exam mode

1. From the Home screen, touch **Exam**.

   The *Pre-acquistion screen* appears.

2. Touch **MANUAL** to enter *Image acquisition mode* and begin the exam of the patient's eye.

   The *Exam acquisition screen* appears.

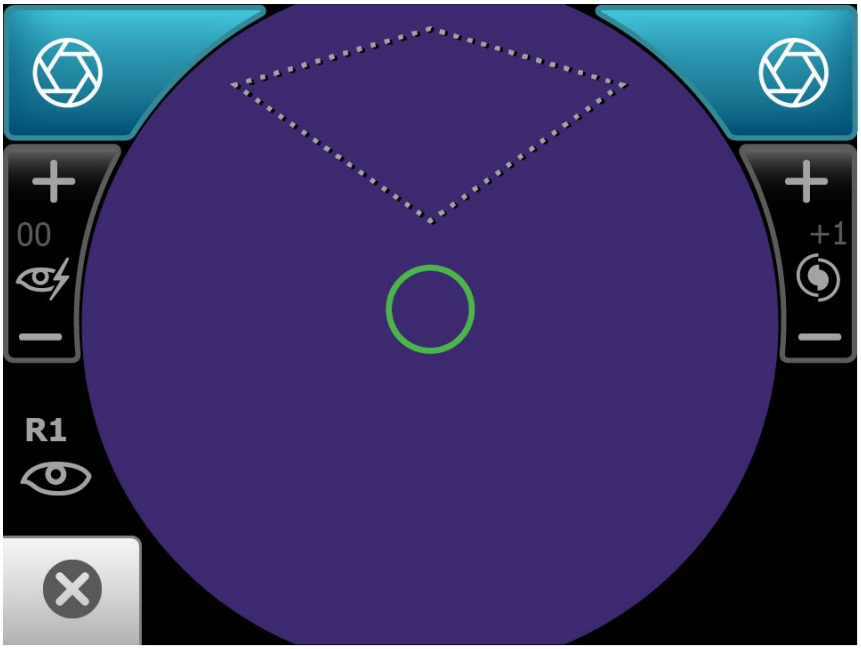

3. (Optional), If necessary, touch to adjust illumination, or touch to adjust the focus.
4. Hold the patient end of the RetinaVue 100 Imager two to three inches directly in front of the patient's examined eye. Continue forward to compress the eye cup against the examined eye.
5. Direct the patient to focus on the green fixation lights inside the barrel of the RetinaVue 100 Imager.
6. Look for a white circular reflection at the top of the eye's image on the LCD touchscreen. This is your initial target.
7. Guide the green circle on the RetinaVue 100 Imager LCD touchscreen towards the initial target by slowly moving the RetinaVue 100 Imager towards the eye.
8. Once the reflection has filled the screen, push slightly forward until a “bubble” appears.
9. Move the patient end of the RetinaVue 100 Imager toward the bubble.
10. Align the bubble inside the diamond icon.
11. Touch or (image capture) to manually capture an image.

    An audible tone alerts you that the image has been captured. The acquired image appears on the LCD touchscreen for review in about five seconds.

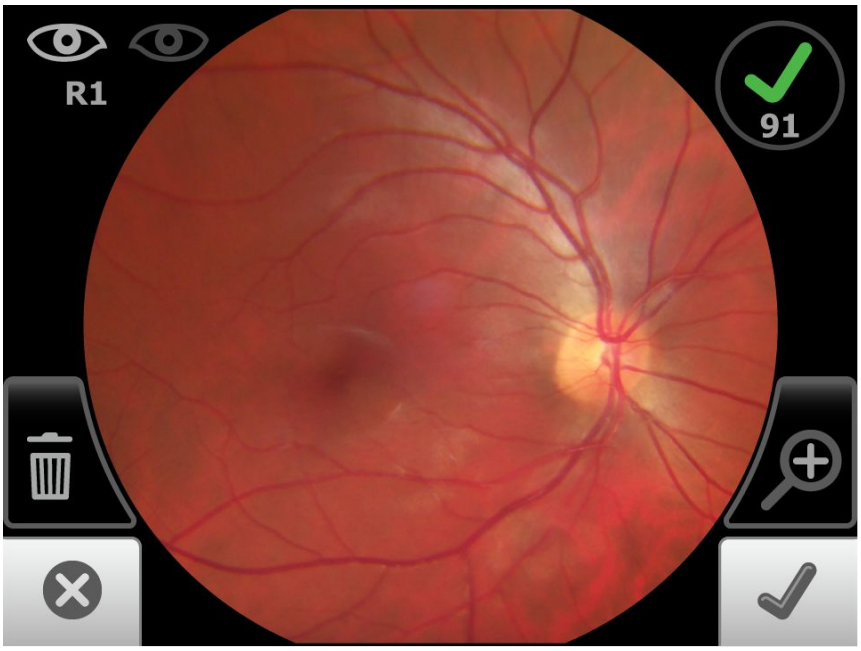

Update the RetinaVue 100 Imager software

Note Patient list changes will only be made to the RetinaVue 100 Imager after it is undocked from the docking station charger. (Transferring patient list information requires the optional RetinaVue Network software.)

Note DICOM files will be available to the RetinaVue Network once the RetinaVue 100 Imager is docked.

CAUTION Do NOT remove the SD Card or the power source from the device during boot up.

Before you begin, you will need the following :

- A SD card to transfer the downloaded software update to the RetinaVue 100 Imager.
- A computer with an Internet connection.
- The RetinaVue 100 Imager you plan to update.
- The docking station charger with a USB cable connected to the power source.

1. Power down the RetinaVue 100 Imager and remove the SD card.
2. Insert the SD card into an open SD card reader port on the computer.
3. Download the software update from www.RetinaVue.com and transfer the software update to a computer.
4. Transfer the software update from the computer to the SD card.
5. Remove the SD card from the computer.
6. Insert the SD card into the RetinaVue 100 Imager.
7. Place the RetinaVue 100 Imager on the docking station charger, connect to the power source, and then power up the RetinaVue 100 Imager.
8. After the RetinaVue 100 Imager boots up, confirm the software upgrade.
   a. Touch **Settings**.
   b. Touch **About** to view the software version.

   You are ready to use the updated software.

Troubleshooting software updates

Note The RetinaVue 100 Imager boots up normally after a successful software update, however if a software update fails, the RetinaVue 100 Imager displays a failed update error message.

Power loss during software update:

- If a power loss occurs during the software update or if there are hardware issues, the RetinaVue 100 Imager posts a blank screen. Remove the battery, reinstall it, and restart RetinaVue 100 Imager. By performing this power cycle, the RetinaVue 100 Imager reverts to a previous version of software. Repeat the steps to perform the update again.

Corrupted software files:

- If the software update on the SD card is corrupted, the RetinaVue 100 Imager displays a failed update error message indicating that the RetinaVue 100 Imager is unable to load the software from the SD card. Remove the SD card, reformat it on a PC. Repeat the steps to perform the update again.

Viewing or changing the RetinaVue 100 Imager settings

To view or change the settings

Touch **Settings**. Modify the settings as desired.

- Touch **Volume**.

Touch (up) or (down) to adjust the device sound volume. Touch (Back) to return to the *Settings screen.*

- Touch **Time**.

Touch (up) or (down) to adjust the hour, minute, Continent, and location.

Touch (Back) to return to the *Settings screen.*

- Touch **Date**.

Touch (up) or (down) to adjust the day, month, and year in the DD/MM/YY format. Touch (Back) to return to the *Settings screen.*

Touch **Advanced Settings**.

Modify the settings as desired

- **Device access code**. Set the Device access numeric code, retype the code to confirm, and touch **OK** to return to the *Advanced Settings screen.*
- **Advanced settings code**. Set the Advanced settings numeric code, retype the code to confirm, and touch **OK** to return to the *Advanced Settings screen*.
- **Format SD**. Touch **OK** to format the SD card to the default settings and touch **OK** again to return to the *Advanced Settings screen*.
- **Factory reset**. Touch **OK** to reset the device to the default settings and touch **OK** again to return to the *Advanced Settings screen*.
- **Export log**. The log files are exported to the SD card. Touch **OK** to return to the Advanced Settings screen. Touch (Back) to return to the *Settings screen*.

Touch **About** to view the software version. Touch **OK**.

Touch (Home) to return to the *Home screen*.

Troubleshooting

CAUTION A defective device should not be used. Parts which may be broken or missing or are visibly worn, distorted, or contaminated should be replaced immediately with clean, genuine replacement parts manufactured by or available from Welch Allyn.

To correct an error, follow these instructions or contact Welch Allyn Technical Support: www.welchallyn.com/service.

Troubleshooting image quality

Good quality image

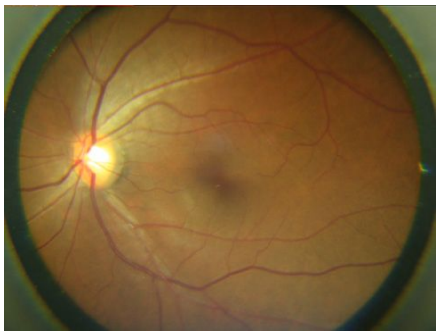

Problem	Solution
Partial blink 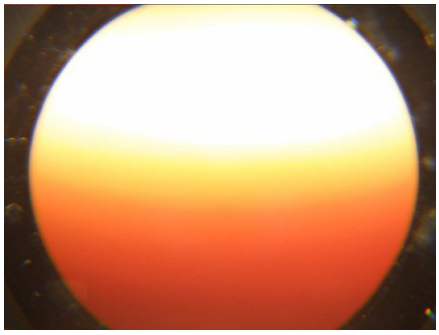	Ask the patient to keep his or her eye open.

Problem	Solution
Dark semi-circle on top 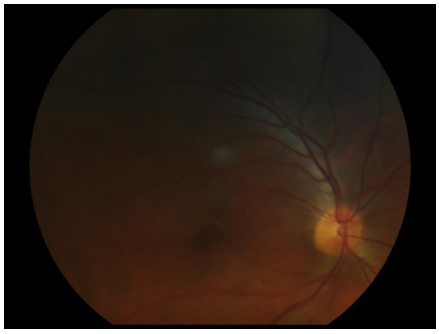	Move the patient side of the RetinaVue 100 Imager down and away from dark semi-circle.
Dirty lens 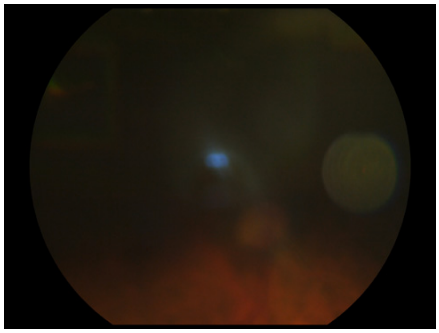	Clean the lens with an appropriate cleaning cloth.

Error messages

Error message/problem	Solution
There is no SD card inserted. Please insert an SD card to continue.	Insert SD card.
SD card access error	Check the write-protection switch on the SD card and ensure that it is in the forward position. Reinsert SD card to ensure the card is seated correctly.
The space left in the SD card is not enough. Please replace the SD card.	Replace the SD card with a formatted SD card.
Failed saving files to the SD card.	Check the write-protection switch on the SD card and ensure that it is in the forward position. Reinsert or replace the SD card and click Retry.

Error message/problem	Solution
Camera is docked. Please lift the camera before saving, deleting or starting an acquisition.	Remove the camera from the docking station.
The battery is running low. Please recharge.	When the battery charge level is between eleven and twenty-five percent, the low battery error message appears. Place the device into the docking station to charge the battery.
The battery level is too low to acquire any image. Please recharge now.	When the battery charge level is below ten percent and the battery icon blinks, the low battery error message appears. Place the device into the docking station to charge the battery.

Maintenance

Clean and disinfect

CAUTION Never submerge the RetinaVue 100 Imager in water or any other liquid.

CAUTION Never use abrasive cleaning agents, thinners or benzene for cleaning and never immerse the instrument in water or other cleaning liquids.

CAUTION Never insert a sharp object into the device or any open surface on the RetinaVue 100 Imager.

CAUTION Do not use unapproved cleaning or disinfection agents. Use of these agents may cause damage to components.

CAUTION Do not use chemicals other than isopropyl or ethyl alcohol on the lens.

The RetinaVue 100 Imager can be cleaned and an intermediate-level of disinfection can be achieved using the following method.

Cleaning the RetinaVue 100 Imager lens

Wipe the surface of the lens with a cleaning cloth or a lens cleaning tissue such as Thorlabs Inc.. Avoid touching the lens except when cleaning is required.

Cleaning the RetinaVue 100 Imager

Power off the RetinaVue 100 Imager before cleaning it.

Use a pre-moistened wipe or soft cloth slightly moistened with an approved cleaner to gently clean the RetinaVue 100 Imager.

Disinfecting the RetinaVue 100 Imager

Use a pre-moistened wipe or soft cloth slightly moistened with an approved disinfectant to disinfect the RetinaVue 100 Imager. Follow the manufacturers recommendations.

Note After cleaning or disinfecting, wait at least 10 minutes before taking another measurement.

Approved cleaning agents

Use only the following approved cleaning agents on the RetinaVue 100 Imager:

- 10 percent chlorine bleach solution
- 70 percent isopropyl alcohol

Welch Allyn has validated these instructions as being capable of preparing the RetinaVue 100 Imager for re-use. You must ensure that cleaning and disinfection as actually performed by your personnel, with your equipment and materials, achieves the desired result. This may require validation and routine monitoring of your actual process.

Specifications

Specifications

View Angle	45 Degree (Typical)
Diopter	-20 ~ +20D (Typical)
Dimensions	L 8.8 inches (224.2 mm) × W 4.2 inches (106.7 mm) × H 4.1 inches (105.2 mm)
Weight	565 Grams ±5%
Search Fundus Lighting	Infrared LED
Camera / video flash light	Natural White Light Emitting Diode (LED)
Captures	Auto capture and Manual capture
Camera Resolution	2048 x 1536 pixels
LCD Monitor	3.5 inch Full Color TFT-LCD
Image Format	Encrypted JPEG/DICOM
Interface	Micro USB
File Transfer	Docking station, micro USB cable to PC running RetinaVue Network Client (requires additional software)
File Storage	SD Card, default 8GB. Supports 2G to 32GB by FAT32 format. Supports 1,200 exams Supports up to 200 patients
Power Source	Rechargeable Lithium Battery 3.6V / 2000mAh
External Power	Source: 100~240 VAC, 50/60 Hz
Power Adapter Spec.	Input Spec. : 100~240 VAC, 50/60 Hz, 0.3A; Output Spec. : 5V DC, 2A
Charger Station Input Spec.	5V DC, 0.7A

Operating Time	2.5 hours at 5 minutes working mode, 2 minutes idle mode, 10 minutes sleep mode, and then 15 minutes power down as one cycle.
Charging Time	5 hours (through the docking station using a Welch Allyn approved battery)

All specifications are subject to change.

Operating environment

Criterion	Environmental conditions
Temperature	+ 10 °C to + 35 °C
Relative humidity	30 % to 90 %
Atmospheric pressure	800 hPa to 1060 hPa

Storage environment

Criterion	Environmental conditions
Temperature	– 10 °C to + 55 °C
Relative humidity	10 % to 95 %
Atmospheric pressure	700 hPa to 1060 hPa

Transportation environment

Criterion	Environmental conditions
Temperature	– 40 °C to + 70 °C
Relative humidity	10 % to 95 %
Atmospheric pressure	500 hPa to 1060 hPa

Device lifetime

The lifetime of the device is five (5) years. The manufacture date of the device can be found on the device labels.

Welch Allyn will service RetinaVue 100 Imager devices that are within their lifetime. Firmware updates and support may require an annual subscription service after the initial one (1) year warranty period. The expected battery life is at least one (1) year. If the RetinaVue 100 Imager device fails to hold a charge, a new battery can be ordered.

Device radio

The RetinaVue 100 Imager's radio operates on Welch Allyn FlexNet™ or other 802.11 networks. For information regarding the configuration of network connections and recommended settings, see the best practices documents at www.welchallyn.com/promotions/Network_Installation_Best_Practices.htm. **Note:** Your model might not contain all of these features.

WLAN standard	IEEE802.11b/g/n, Wi-Fi compliant
Frequency Range	2.412 to 2.484 GHz
Data Rate	802.11b: 11, 5.5, 2, 1 Mbps DSSS 802.11g: 54, 48, 36, 24, 18, 12, 9, 6 Mbps OFDM 802.11n: HT20 MCS0~7, HT40 MCS0~7
Modulation	802.11b: CCK, DQPSK, DBPSK 802.11g: 64 QAM, 16 QAM, QPSK, BPSK 802.11n: BPSK, QPSK, 16-QAM, 64-QAM
Host interface	USB 2.0
Encryption	WPA, WPA-PSK, WPA2, WPA2-PSK, WEP 64bit & 128bit, IEEE 802.11x, IEEE 802.11i
Channel availability	2.4GHz: (Ch. 1-11) – United States (Ch. 1-13) – Europe (Ch. 1-14) – Japan
Antenna	PCB-37x6-15U.FL with I-PEX cable, Max Gain: 1.3 dBi
Agency approvals	**US**: FCC 15.247:2014, KDB 558074 V3, Part 18, ANSI C63.10.2013 **Europe**: Annex 3.2 R&TTED in 2.4 GHz bands, EN 300 328 V1.9.1:2015, EN 301 489-17 V2.2.1:2012, EN 301 489-01 V1.9.2:2011, EN62479

Channel restrictions in the 5-GHz band are determined by country.
Marking by the symbol (!) indicates that usage restrictions apply.

To ensure compliance with local regulations, be sure the correct country in which the access point is installed is selected. This product can be used with the following restriction(s):

Norway - Does not apply for the geographical area within a radius of 20 km from the center of Ny-Ålesund.

France - Outdoor use is limited to 10 mW EIRP within the band 2454 to 2483.5 MHz.

Note Effective Isotropic Radiated Power (EIRP).

Note Some countries restrict the use of 5-GHz bands. The 802.11a radio in the RetinaVue 100 Imager uses only the channels indicated by the access point with which the radio associates. The hospital IT department must configure access points to operate with approved domains.

General compliance and standards

The RetinaVue 100 Imager complies with the following standards:

IEC 60601-1 : 2005 (EN 60601-1 : 2006)

IEC 60601-1-2 : 2007 (EN 60601-1-2 : 2007)

ISO 15004-1 : 2006

ISO 15004-2 : 2007

ISO 10940 : 2009

Directive 2002/96/EC-WEEE:
Disposal of noncontaminated electrical and electronic equipment

This product and its accessories must be disposed of according to local laws and regulations. Do not dispose of this product as unsorted municipal waste. Prepare this product for reuse or separate collection as specified by Directive 2002/96/EC of the European Parliament and the Council of the European Union on Waste Electronic and Electrical Equipment (WEEE). If this product is contaminated, this directive does not apply.

For more specific disposal or compliance information, see www.welchallyn.com/weee, or contact Welch Allyn Customer Service at +44 207 365 6780.

General radio compliance

Note Your model might not contain all of these features.

The wireless features of this device must be used in strict accordance with the manufacturer's instructions as described in the user documentation that comes with the product.

Federal Communications Commission (FCC)

This device complies with part 15 of the FCC Rules. Operation is subject to the following two conditions:

- This device may not cause harmful interference.
- This device must accept any interference received, including interference that may cause undesired operation.

This equipment has been tested and found to comply with the limits for a Class B digital device, pursuant to Part 15 of FCC Rules. These limits are designed to provide reasonable protection against harmful interference in a residential installation. This equipment generates, uses, and can radiate radio frequency energy. If not installed and used in accordance with the instructions, it may cause harmful interference to radio communications. However, there is no guarantee that interference will not occur in a particular installation. If this equipment does cause harmful interference to radio or television reception, which can be determined by turning the equipment off and on, the user is encouraged to try and correct the interference by one or more of the following measures:

- Reorient or relocate the receiving antenna
- Increase the distance between the equipment and the receiver
- Connect the equipment to an outlet on a circuit different from that to which the receiver is connected
- Consult the dealer or an experienced radio/TV technician for help

The user may find the following booklet prepared by the Federal Communications Commission helpful:

The Interference Handbook

This booklet is available from the U.S. Government Printing Office, Washington, D.C. 20402. Stock No. 004-000-0034504.

Welch Allyn is not responsible for any radio or television interference caused by unauthorized modification of the devices included with this Welch Allyn product, or the substitution or attachment of connecting cables and equipment other than specified by Welch Allyn.

The correction of interference caused by such unauthorized modification, substitution, or attachment will be the responsibility of the user.

The device is designed and tested to meet the applicable limits for radio frequency (RF) exposure established by the Federal Communications Commission (U.S.A.) Specific Absorption Rate; (SAR) refers to the rate at which the body absorbs RF energy.

The maximum allowable SAR limit is 4.0 W/kg, averaged over 10 gram of tissue for the device. The following SAR values were measured during product certification, 1.060 W/kg with a (0mm gap) a value well below the maximum allowable limit of 4.0 W/kg.

EMC compliance

Special precautions concerning electromagnetic compatibility (EMC) must be taken for all medical electrical equipment. This device complies with IEC EN 60601-1-2:2007.

- All medical electrical equipment must be installed and put into service in accordance with the EMC information provided in this *Directions for use*.
- Portable and mobile RF communications equipment can affect the behavior of medical electrical equipment.

The 901103 Imager complies with all applicable and required standards for electromagnetic interference.

- It does not normally affect nearby equipment and devices.
- It is not normally affected by nearby equipment and devices.

- However, it is good practice to avoid using the 901103 Imager in extremely close proximity to other equipment.
- It is not safe to operate the 901103 Imager in the presence of high-frequency surgical equipment.

Emissions and immunity information

Electromagnetic emissions

The 901103 is intended for use in the electromagnetic environment specified below. The customer or user of the 901103 should assure that it is used in such an environment.

Emissions test	Compliance	Electromagnetic environment - guidance
RF emissions CISPR 11	Group 1	The 901103 uses RF energy only for its internal function. Therefore, its RF emissions are very low and are not likely to cause any interference in nearby electronic equipment.
RF emissions CISPR 11	Class B	The 901103 is suitable for use in all establishments, including domestic establishments and those directly connected to the public low voltage power supply network that supplies buildings used for domestic purposes. **WARNING** This equipment/system is intended for use by healthcare professionals only. This equipment/ system may cause radio interference or may disrupt the operation of nearby equipment [a]. It may be necessary to take mitigation measures, such as re-orienting or relocating the 901103 or shielding the location.
Harmonic emissions IEC 61000-3-2	Class A	
Voltage fluctuations/ flicker emissions IEC 61000-3-3	Complies	

[a] The 901103 contains a 5-GHz orthogonal frequency-division multiplexing transmitter or a 2.4-GHz frequency hopping spread-spectrum transmitter for the purpose of wireless communication. The radio is operated according to the requirements of various agencies, including FCC 47 CFR 15.247 and R&TTE Directive (1995/5/EC). The transmitter is excluded from the EMC requirements of 60601-1-2, but should be considered when addressing possible interference issues between this and other devices.

Electromagnetic immunity

The 901103 is intended for use in the electromagnetic environment specified below. The customer or the user of the 901103 should assure that it is used in such an environment.

Immunity test	IEC 60601 test level	Compliance level	Electromagnetic environment - guidance
Electrostatic discharge (ESD) IEC 61000-4-2	±6 kV contact ± 8 kV air	± 6 kV contact ± 8 kV air	Floors should be wood, concrete or ceramic tile. If floors are covered with synthetic material, the relative humidity should be at least 30%.
Electrical fast transient/burst IEC 61000-4-4	±2 kV for power supply lines ±1 kV for input/output lines	±2 kV for power supply lines ±1 kV for input/output lines	Mains power quality should be that of a typical commercial or hospital environment.

Electromagnetic immunity

Surge IEC 61000-4-5	± 1 kV differential mode ± 2 kV common mode	± 1 kV differential mode ± 2 kV common mode	Mains power quality should be that of a typical commercial or hospital environment.
Voltage dips, short interruptions and voltage variations on power supply input lines IEC 61000-4-11	>95% dip in 0.5 cycle 60% dip in 5 cycles 30% dip for 25 cycles >95% dip in 5 seconds	>95% dip in 0.5 cycle 60% dip in 5 cycles 30% dip for 25 cycles >95% dip in 5 seconds	Mains power quality should be that of a typical commercial or hospital environment. If the user of the 901103 requires continued operation during power mains interruptions, it is recommended that the 901103 be powered from an uninterruptible power supply or a battery.

Electromagnetic immunity

The 901103 is intended for use in the electromagnetic environment specified below. The customer or the user of the 901103 should assure that it is used in such an environment.

Immunity test	IEC 60601 test level	Compliance level	Electromagnetic environment - guidance
			Portable and mobile RF communications equipment should be used no closer to any part of the 901103, including cables, than the recommended separation distance calculated from the equation applicable to the frequency of the transmitter.
			Recommended separation distance
Conducted RF IEC 61000-4-6	3 Vrms 150 kHz to 80 MHz	3 Vrms	$d = (1.17)\sqrt{P}$
Radiated RF IEC 61000-4-3	3 V/m 80 MHz to 1 GHz	3 V/m	$d = (1.17)\sqrt{P}$ 80 to 800 MHz
			$d = (2.33)\sqrt{P}$ 800 MHz to 2,5 GHz where *P* is the maximum output power rating of the transmitter in watts (W) and *d* is the recommended separation distance in meters (m). Field strengths from fixed RF transmitters, as determined by an electromagnetic site survey[a], should be less than the compliance level in each frequency range[b]. Interference may occur in the vicinity of equipment marked with the following symbol:

Note1: At 80 MHz and 800 MHz, the higher frequency range applies.

Note 2: These guidelines may not apply in all situations. Electromagnetic propagation is affected by absorption and reflection from structures, objects, and people.

[a]Field strengths from fixed transmitters, such as base stations for radio (cellular/cordless) telephones and land mobile radios, amateur radio, AM and FM radio broadcast, and TV broadcast cannot be predicted theoretically with accuracy. To

Electromagnetic immunity

assess the electromagnetic environment due to fixed RF transmitters, an electromagnetic site survey should be considered. If the measured field strength in the location in which the 901103 is used exceeds the applicable RF compliance level above, the 901103 should be observed to verify normal operation. If abnormal performance is observed, additional measures may be necessary, such as reorienting or relocating the 901103.

[b]Over the frequency range 150 kHz to 80 MHz, field strengths should be less than 3 V/m.

Recommended separation distances between portable and mobile RF communications equipment and the 901103

The 901103 is intended for use in an electromagnetic environment in which radiated RF disturbances are controlled. The customer or user of the 901103 can help prevent electromagnetic interference by maintaining a minimum distance between portable and mobile RF communications equipment (transmitters) and the 901103 as recommended below, according to the maximum output power of the communications equipment.

	Separation distance according to frequency of transmitter (m)		
Rated max. output power of transmitter (W)	**150 kHz to 80 MHz** $d = (1.17)\sqrt{P}$	**80 MHz to 800 MHz** $d = (1.17)\sqrt{P}$	**800 MHz to 2.5 GHz** $d = (2.23)\sqrt{P}$
0.01	0.11667	0.11667	0.23333
0.1	0.36894	0.36894	0.73785
1	1.1667	1.1667	2.3333
10	3.6894	3.6894	7.3785
100	11.667	11.667	23.3333

For transmitters rated at a maximum output power not listed above, the recommended separation distance *d* in meters (m) can be estimated using the equation applicable to the frequency of the transmitter, where *P* is the maximum output power rating of the transmitter in watts (W) according to the transmitter manufacturer.

Note 1: At 80 MHz and 800 MHz, the separation distance for the higher frequency range applies.

Note 2: These guidelines may not apply in all situations. Electromagnetic propagation is affected by absorption and reflection from structures, objects, and people.

Approved accessories

The following table lists the approved RetinaVue 100 Imager accessories.

WARNING Use only Welch Allyn approved accessories and use them according to the manufacturer's directions for use. Using unapproved accessories with the RetinaVue 100 Imager can affect patient and operator safety and can compromise product performance and accuracy, and void the product warranty.

Accessories

Miscellaneous items

Part number	Description
RV100	RetinaVue 100 Imager with lithium-ion battery
106401	Charging Dock for Welch Allyn RetinaVue 100 Imager; 100-240 V, 50-60 Hz
106404	Reusable Eye Cups for Welch Allyn RetinaVue 100 Imager: Qty. 5
106405	Battery for Welch Allyn RetinaVue 100 Imager; Lithium-Ion
106406	Replacement USB Cable for Welch Allyn RetinaVue 100 Imager
106507	Power supply wall adapter for Welch Allyn RetinaVue 100 Imager. 100-240 V, 50-60 Hz; IEC Plug Type B (US)
106541	RetinaVue 100 Imager Chin rest adapter
106547	RetinaVue 100 Imager Chin rest
236200-2	Welch AllynRetinaVue 100 Imager replacement screwdriver for battery cover. #1 Phillips Screwdriver w/ Logo
106558	Laptop for RetinaVue Network Client

Service

Part number	Description
S1-RV100-1	Welch Allyn Partners in Care Comprehensive Partnership Program Service Agreement for RetinaVue 100 Imager; 1 year
S1-RV100-2	Welch Allyn Partners in Care Comprehensive Partnership Program Service Agreement for RetinaVue 100 Imager; 2 year
S1-RV100-5	Welch Allyn Partners in Care Comprehensive Partnership Program Service Agreement for RetinaVue 100 Imager; 5 year

Literature/Documentation

Part number	Description
411492	RetinaVue 100 Imager Directions for use
723617	RetinaVue 100 Imager Startup guide
411513	Chin rest adapter assembly guide
724146	RetinaVue 100 Imager Technique guide

Warranty

Welch Allyn warrants the product to be free of defects in material and workmanship and to perform in accordance with manufacturer's specifications for the period of one year from the date of purchase from Welch Allyn or its authorized distributors or agents.

The warranty period shall start on the date of purchase. The date of purchase is: 1) the invoiced ship date if the device was purchased directly from Welch Allyn, 2) the date specified during product registration, 3) the date of purchase of the product from a Welch Allyn authorized distributor as documented from a receipt from said distributor.

This warranty does not cover damage caused by: 1) handling during shipping, 2) use or maintenance contrary to labeled instructions, 3) alteration or repair by anyone not authorized by Welch Allyn, and 4) accidents.

Shipping cost to return a device to a Welch Allyn Service center is not included.

A service notification number must be obtained from Welch Allyn prior to returning any products or accessories to Welch Allyn's designated service centers for repair. To obtain a service notification number, contact Welch Allyn Technical Support.

THIS WARRANTY IS IN LIEU OF ALL OTHER WARRANTIES, EXPRESS OR IMPLIED, INCLUDING BUT NOT LIMITED TO THE IMPLIED WARRANTIES OF MERCHANTABILITY AND FITNESS FOR A PARTICULAR PURPOSE. WELCH ALLYN'S OBLIGATION UNDER THIS WARRANTY IS LIMITED TO REPAIR OR REPLACEMENT OF PRODUCTS CONTAINING A DEFECT. WELCH ALLYN IS NOT RESPONSIBLE FOR ANY INDIRECT OR CONSEQUENTIAL DAMAGES RESULTING FROM A PRODUCT DEFECT COVERED BY THE WARRANTY.

Welch Allyn®

Advancing Frontline Care™

Material No. 411492