TECHNICAL REPORT

Report No: FCC 1507061
File reference No: 2015-08-03

Applicant: Sancon Inc.

Product: 10 channel FM wireless intercom

Model No: FWAN10A

Trademark: SAMCOM

Test Standards: FCC Part 95, Subpart B and Subpart E;

Test result: It is herewith confirmed and found to comply with the requirements set up by ANSI C63.10, FCC Part 95, Subpart B and Subpart E; regulations for the evaluation of electromagnetic compatibility

Approved By

Jack Chung

Jack Chung
Manager

Dated: August 03, 2015

Results appearing herein relate only to the sample tested
The technical reports is issued errors and omissions exempt and is subject to withdrawal at

SHENZHEN TIMEWAY TESTING LABORATORIES

Room 512-519, 5/F., East Tower, Building 4, Anhua Industrial Zone, Futian District, Shenzhen, Guangdong, China
Tel (755) 83448688, Fax (755) 83442996, E-Mail:info@timewaytech.com

Special Statement:

The testing quality ability of our laboratory meet with "Quality Law of People's Republic of China" Clause 19.

The testing quality system of our laboratory meets with ISO/IEC-17025 requirements, which is approved by CNAS. This approval result is accepted by MRA of APLAC.

Our test facility is recognized, certified, or accredited by the following organizations:

CNAS-LAB Code: L2292

The EMC Laboratory has been assessed and in compliance with CNAS-CL01 accreditation criteria for testing Laboratories (identical to ISO/IEC 17025:1999 General Requirements) for the Competence of testing Laboratories.

FCC-Registration No.: 899988

The EMC Laboratory has been registered and fully described in a report filed with the (FCC) Federal Communications commission. The acceptance letter from the FCC is maintained in our files. Registration No.:899988.

IC- Registration No.: IC5205A-02

The EMC Laboratory has been registered and fully described in a report filed with the (IC) Industry Canada. The acceptance letter from the IC is maintained in our files. Registration No.: IC 5205A-02.

The report refers only to the sample tested and does not apply to the bulk.
This report is issued in confidence to the client and it will be strictly treated as such by the SHENZHEN TIMEWAY TESTING LABORATORIES. It may not be reproduced rather in its entirety or in part and it may not be used for adverting. The client to whom the report is issued may, however, show or send it . or a certified copy there of prepared by the SHENZHEN TIMEWAY TESTING LABORATORIES to his customer. Supplier or others persons directly concerned. SHENZHEN TIMEWAY TESTING LABORATORIES will not, without the consent of the client enter into any discussion of correspondence with any third party concerning the contents of the report.
In the event of the improper use of the report. SHENZHEN TIMEWAY TESTING LABORATORIES reserves the rights to withdraw it and to adopt any other remedies which may be appropriate.

Test Report Conclusion

Content

1.0	**General Details** ……	4
1.1	Test Lab Details……	4
1.2	Applicant Details……	4
1.3	Description of EUT ……	4
1.4	Submitted Sample……	4
1.5	Test Duration……	5
1.6	Test Uncertainty……	5
1.7	Test By……	5
2.0	**List of Measurement Equipment**……	6
3.0	**Technical Details**……	7
3.1	Summary of Test Results……	7
3.2	Test Standards……	7
4.0	EUT Modification……	7
5.0	Power Line Conducted Emission Test……	8
6.0	Frequency Tolerance……	12
7.0	EMISSION BANDWIDTH and Mask……	15
8.0	UNWANTED RADIATION……	24
9.0	Modulation Characteristics……	27
10.0	MAXIMUM TRANSMITTER POWER……	31
11.0	Radiated Emission on Receiving Mode……	32
12.0	FCC ID Label……	33
13.0	Photo of testing……	34

The report refers only to the sample tested and does not apply to the bulk.
This report is issued in confidence to the client and it will be strictly treated as such by the SHENZHEN TIMEWAY TESTING LABORATORIES. It may not be reproduced rather in its entirety or in part and it may not be used for adverting. The client to whom the report is issued may, however, show or send it . or a certified copy there of prepared by the SHENZHEN TIMEWAY TESTING LABORATORIES to his customer. Supplier or others persons directly concerned. SHENZHEN TIMEWAY TESTING LABORATORIES will not, without the consent of the client enter into any discussion of correspondence with any third party concerning the contents of the report.
In the event of the improper use of the report. SHENZHEN TIMEWAY TESTING LABORATORIES reserves the rights to withdraw it and to adopt any other remedies which may be appropriate.

1.0 General Details

1.1 Test Lab Details

Name : SHENZHEN TIMEWAY TESTING LABORATORIES.

Address: Room 512-519,5/F., East Tower,Building 4, Anhua Industrial Zone, Futian District,Shenzhen, Guangdong China

Telephone: (755) 83448688

Fax: (755) 83442996

Site on File with the Federal Communications Commission – United Sates

Registration Number: 899988

For 3m & 10 m OATS

Site Listed with Industry Canada of Ottawa, Canada

Registration Number: IC: 5205A-02

For 3m & 10 m OATS

1.2 Applicant Details

Applicant: Sancon Inc.

Address: 36 South 18th Avenue, Suite A Brighton, CO USA 80601

Telephone: (702) 866-2500

Fax: (702) 866-2689

1.3 Description of EUT

Product: 10 channel FM wireless intercom

Manufacturer: Guangdong Samzuk Technology Development Co,Ltd

Address: High-Tech Zone Xinggong Avenue East Heyuan City（2/F of Minghuang Electrical Engineering Company Building）

Brand Name: SAMCOM

Additional Brand Name: N/A

Model Number: FWAN10A

Additional Model Number: N/A

Type of Modulation FM

The report refers only to the sample tested and does not apply to the bulk.
This report is issued in confidence to the client and it will be strictly treated as such by the SHENZHEN TIMEWAY TESTING LABORATORIES. It may not be reproduced rather in its entirety or in part and it may not be used for adverting. The client to whom the report is issued may, however, show or send it . or a certified copy there of prepared by the SHENZHEN TIMEWAY TESTING LABORATORIES to his customer. Supplier or others persons directly concerned. SHENZHEN TIMEWAY TESTING LABORATORIES will not, without the consent of the client enter into any discussion of correspondence with any third party concerning the contents of the report.
In the event of the improper use of the report. SHENZHEN TIMEWAY TESTING LABORATORIES reserves the rights to withdraw it and to adopt any other remedies which may be appropriate.

Frequency range

Channel	Frequence (MHz)
1	467.7125
2	467.6875
3	467.6625
4	467.6375
5	467.6125
6	467.5875
7	467.5625
8	462.7125
9	462.6875
0	462.6625

Antenna: Integral antenna with Gain 2.0 dBi

Rating: DC4.5V, 3 pcs AAA Size batteries

1.4 Submitted Sample: 2 Samples

1.5 Test Duration

2015-07-03 to 2015-08-03

1.6 Test Uncertainty

Conducted Emissions Uncertainty =3.6dB

Radiated Emissions Uncertainty =4.7dB

1.7 Test Engineer

The sample tested by Terry Tang

Print Name: Terry Tang

The report refers only to the sample tested and does not apply to the bulk.
This report is issued in confidence to the client and it will be strictly treated as such by the SHENZHEN TIMEWAY TESTING LABORATORIES. It may not be reproduced rather in its entirety or in part and it may not be used for adverting. The client to whom the report is issued may, however, show or send it . or a certified copy there of prepared by the SHENZHEN TIMEWAY TESTING LABORATORIES to his customer. Supplier or others persons directly concerned. SHENZHEN TIMEWAY TESTING LABORATORIES will not, without the consent of the client enter into any discussion of correspondence with any third party concerning the contents of the report.
In the event of the improper use of the report. SHENZHEN TIMEWAY TESTING LABORATORIES reserves the rights to withdraw it and to adopt any other remedies which may be appropriate.

2.0 Test Equipments					
Instrument Type	Manufacturer	Model	Serial No.	Date of Cal.	Due Date
ESPI Test Receiver	R&S	ESPI 3	100379	2014-08-21	2015-08-20
TWO Line-V-NETW	R&S	EZH3-Z5	100294	2014-08-22	2015-08-21
TWO Line-V-NETW	R&S	EZH3-Z5	100253	2014-08-22	2015-08-21
Ultra Broadband ANT	R&S	HL562	100157	2014-08-23	2015-08-22
ESDV Test Receiver	R&S	ESDV	100008	2014-08-22	2015-08-21
Impuls-Begrenzer	R&S	ESH3-Z2	100281	2014-08-21	2015-08-20
System Controller	CT	SC100	-	--	--
Printer	EPSON	PHOTO EX3	CFNH234850	--	--
Computer	IBM	8434	1S8434KCE99BLXLO*	-	-
Loop Antenna	EMCO	6502	00042960	2014-08-22	2015-08-21
ESPI Test Receiver	R&S	ESI26	838786/013	2014-08-22	2015-08-21
3m OATS	--	--	N/A	2014-08-21	2015-08-20
Horn Antenna	R&S	BBHA 9170	BBHA9170265	2014-08-23	2015-08-22
Horn Antenna	R&S	BBHA 9120D	9120D-631	2014-08-23	2015-08-22
Power meter	Anritsu	ML2487A	6K00003613	2014-08-22	2015-08-21
Power sensor	Anritsu	MA2491A	32263	2014-08-22	2015-08-21
Bilog Antenna	Schwarebeck	VULB9163	9163/340	2014-08-23	2015-08-22
LISN	AFJ	LS16C	10010947251	2014-08-21	2015-08-20
LISN (Three Phase)	Schwarebeck	NSLK 8126	8126453	2014-08-22	2015-08-21
9*6*6 Anechoic	--	--	N/A	2014-08-21	2015-08-20
EMI Test Receiver	RS	ESCS30	100139	2014-08-22	2015-08-21
Modulation Analyzer	HP	8901B	3104A03367	2015-06-11	2016-06-10

The report refers only to the sample tested and does not apply to the bulk.
This report is issued in confidence to the client and it will be strictly treated as such by the SHENZHEN TIMEWAY TESTING LABORATORIES. It may not be reproduced rather in its entirety or in part and it may not be used for adverting. The client to whom the report is issued may, however, show or send it . or a certified copy there of prepared by the SHENZHEN TIMEWAY TESTING LABORATORIES to his customer. Supplier or others persons directly concerned. SHENZHEN TIMEWAY TESTING LABORATORIES will not, without the consent of the client enter into any discussion of correspondence with any third party concerning the contents of the report.
In the event of the improper use of the report. SHENZHEN TIMEWAY TESTING LABORATORIES reserves the rights to withdraw it and to adopt any other remedies which may be appropriate.

3.0 Technical Details

3.1 Summary of test results

The EUT has been tested according to the following specifications:

Standard	Test Type	Result	Notes
FCC Part 15.207	Conducted Emission	Pass	**Complies**
FCC Part 95.639	Maximum Transmitter Power	Pass	**Complies**
FCC Part 95.637	Modulation Characteristic	Pass	**Complies**
FCC Part 95.633	Occupied Bandwidth	Pass	**Complies**
FCC Part 95.633	Emission Mask	Pass	**Complies**
FCC Part 95.626	Frequency Tolerance	Pass	**Complies**
FCC Part 95.635	Spurious Radiated Emissions	Pass	**Complies**

3.2 Test Standards

FCC Part 95, ANSI C63.10:2013

4.0 EUT Modification

No modification by Shenzhen Timeway Technology Consulting Co., Ltd

The report refers only to the sample tested and does not apply to the bulk.
This report is issued in confidence to the client and it will be strictly treated as such by the SHENZHEN TIMEWAY TESTING LABORATORIES. It may not be reproduced rather in its entirety or in part and it may not be used for adverting. The client to whom the report is issued may, however, show or send it . or a certified copy there of prepared by the SHENZHEN TIMEWAY TESTING LABORATORIES to his customer. Supplier or others persons directly concerned. SHENZHEN TIMEWAY TESTING LABORATORIES will not, without the consent of the client enter into any discussion of correspondence with any third party concerning the contents of the report.
In the event of the improper use of the report. SHENZHEN TIMEWAY TESTING LABORATORIES reserves the rights to withdraw it and to adopt any other remedies which may be appropriate.

5. Power Line Conducted Emission Test

5.1 Schematics of the test

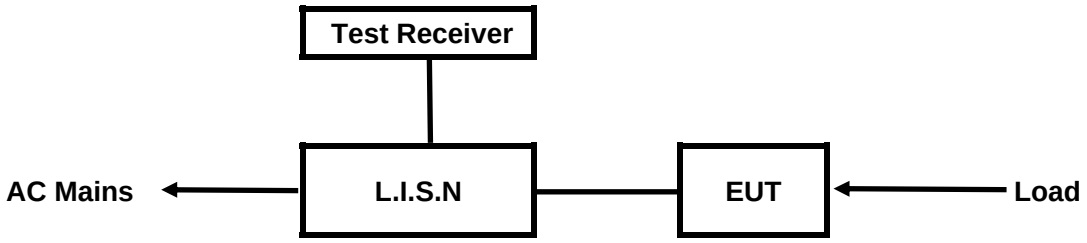

EUT: Equipment Under Test

5.2 Test Method and test Procedure

The EUT was tested according to ANSI C63.10-2013.The Frequency spectrum From 0.15MHz to 30MHz was investigated. The LISN used was 50ohm/50uH as specified by section 5.1 of ANSI C63.10-2013.

Test Voltage: 120V~, 60Hz

Block diagram of Test setup

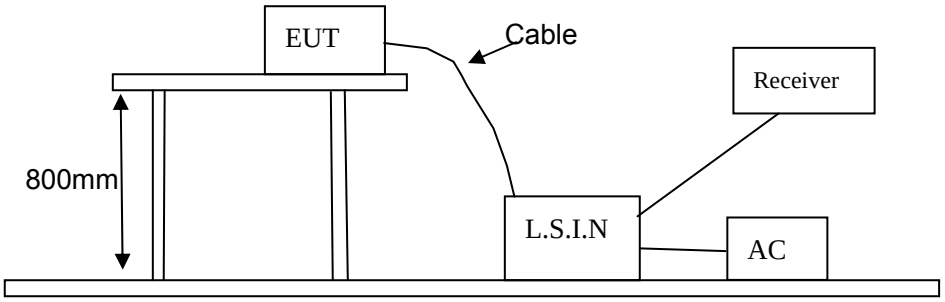

5.3 Configuration of The EUT

The EUT was configured according to ANSI C63.10-2013. All interface ports were connected to the appropriate peripherals. All peripherals and cables are listed below.

One channels are provided to the EUT

A. EUT

Device	Manufacturer	Model	FCC ID
10 channel FM wireless intercom	Guangdong Samzuk Technology Development Co,Ltd	FWAN10A	2AFC8-FWAN10A

B. Internal Device

Device	Manufacturer	Model	FCC ID/DOC
N/A			

The report refers only to the sample tested and does not apply to the bulk.
This report is issued in confidence to the client and it will be strictly treated as such by the SHENZHEN TIMEWAY TESTING LABORATORIES. It may not be reproduced rather in its entirety or in part and it may not be used for adverting. The client to whom the report is issued may, however, show or send it . or a certified copy there of prepared by the SHENZHEN TIMEWAY TESTING LABORATORIES to his customer. Supplier or others persons directly concerned. SHENZHEN TIMEWAY TESTING LABORATORIES will not, without the consent of the client enter into any discussion of correspondence with any third party concerning the contents of the report.
In the event of the improper use of the report. SHENZHEN TIMEWAY TESTING LABORATORIES reserves the rights to withdraw it and to adopt any other remedies which may be appropriate.

C. Peripherals

Device	Manufacturer	Model	FCC ID/DOC	Cable
N/A				

5.4 EUT Operating Condition

Operating condition is according to ANSI C63.10-2013

A Setup the EUT and simulators as shown on follow

B Enable AF signal and confirm EUT active to normal condition

5.5 Power line conducted Emission Limit according to Paragraph 15.207

Frequency(MHz)	Class A Limits (dBμV)		Class B Limits (dBμV)	
	Quasi-peak Level	Average Level	Quasi-peak Level	Average Level
0.15 ～ 0.50	79.0	66.0	66.0～56.0*	56.0～46.0*
0.50 ～ 5.00	73.0	60.0	56.0	46.0
5.00 ～ 30.00	73.0	60.0	60.0	50.0

Notes: 1. *Decreasing linearly with logarithm of frequency.

2. The tighter limit shall apply at the transition frequencies

5.6 Test Results: N/A

Note: EUT Powered by 3*AAA batteries.

The report refers only to the sample tested and does not apply to the bulk.
This report is issued in confidence to the client and it will be strictly treated as such by the SHENZHEN TIMEWAY TESTING LABORATORIES. It may not be reproduced rather in its entirety or in part and it may not be used for adverting. The client to whom the report is issued may, however, show or send it . or a certified copy there of prepared by the SHENZHEN TIMEWAY TESTING LABORATORIES to his customer. Supplier or others persons directly concerned. SHENZHEN TIMEWAY TESTING LABORATORIES will not, without the consent of the client enter into any discussion of correspondence with any third party concerning the contents of the report.
In the event of the improper use of the report. SHENZHEN TIMEWAY TESTING LABORATORIES reserves the rights to withdraw it and to adopt any other remedies which may be appropriate.

6. Frequency Tolerance

6.1 Applicable standard

According to FCC §2.1055(a) (1), the frequency stability shall be measured with variation of ambient temperature from –30 ºC to +50 ºC, and according to FCC 2.1055(d) (2), the frequency stability shall be measured with reducing primary supply voltage to the battery operating end point which is specified by the manufacturer.

According to FCC §95.626(b), Each FRS Unit must be maintained within a frequency tolerance of 0.00025 %(2.5 ppm).

6.2 Measurement Procedure

6.2.1 Frequency stability versus environmental temperature

1. Setup the configuration per figure 1 for frequencies measurement inside an environment chamber, Install new battery in the EUT.
2. Turn on EUT and set SA center frequency to the EUT radiated frequency. Set SA Resolution Bandwidth to 1KHz and Video Resolution Bandwidth to 1KHz and Frequency Span to 50KHz.Record this frequency as reference frequency.
3. Set the temperature of chamber to 50℃. Allow sufficient time (approximately 30 min) for the temperature of the chamber to stabilize. While maintaining a constant temperature inside the chamber, turn the EUT on and measure the EUT operating frequency.
4. Repeat step 2 with a 10℃ decreased per stage until the lowest temperature -30℃ is measured, record all measured frequencies on each temperature step.

6.2.2 Frequency stability versus input voltage

1. Setup the configuration per figure 1 for frequencies measured at temperature if it is within 15℃to 25℃. Otherwise, an environment chamber set for a temperature of 20℃shall be used.
2. Set SA center frequency to the EUT radiated frequency. Set SA Resolution Bandwidth to 1 KHz and Video Resolution Bandwidth to 1KHz. Record this frequency as reference frequency.
3. Supply the EUT primary voltage at the operating end point which is specified by manufacturer and record the frequency.

The report refers only to the sample tested and does not apply to the bulk.
This report is issued in confidence to the client and it will be strictly treated as such by the SHENZHEN TIMEWAY TESTING LABORATORIES. It may not be reproduced rather in its entirety or in part and it may not be used for adverting. The client to whom the report is issued may, however, show or send it . or a certified copy there of prepared by the SHENZHEN TIMEWAY TESTING LABORATORIES to his customer. Supplier or others persons directly concerned. SHENZHEN TIMEWAY TESTING LABORATORIES will not, without the consent of the client enter into any discussion of correspondence with any third party concerning the contents of the report.
In the event of the improper use of the report. SHENZHEN TIMEWAY TESTING LABORATORIES reserves the rights to withdraw it and to adopt any other remedies which may be appropriate.

6.3 TEST SETUP BLOCK DIAGRAM

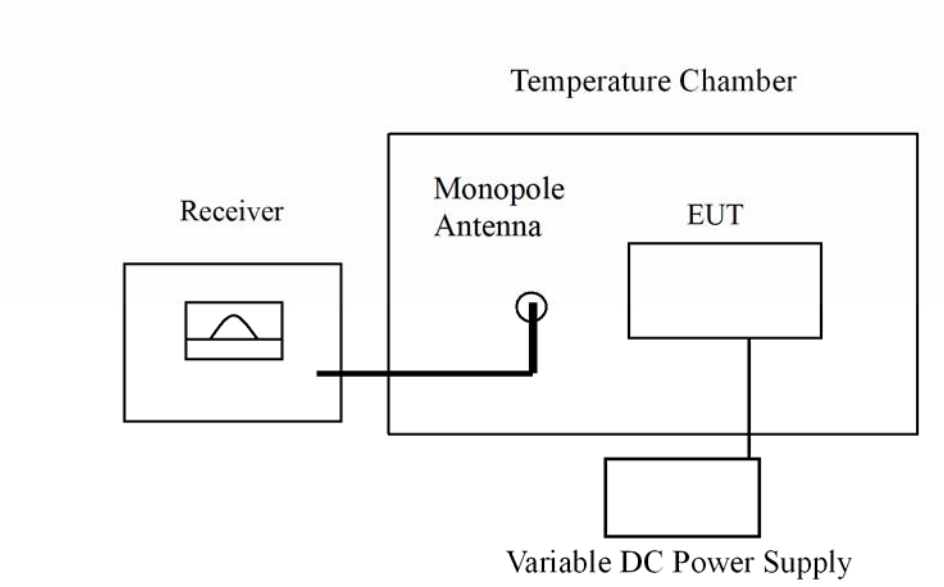

Figure 1

6.5 TEST RESULT

(1) Frequency stability versus input voltage (The end point voltage is 3.8V)

Channel	Power Supplied (Vdc)	Frequency Measured (MHz)	Frequency Deviation (ppm)	Nominal Frequency	Limit (ppm)
CH5	3.8V	467.611923	-1.23	467.6125MHz	±2.5
CH9	3.8V	462.687056	-0.96	462.6875MHz	±2.5

The report refers only to the sample tested and does not apply to the bulk.
This report is issued in confidence to the client and it will be strictly treated as such by the SHENZHEN TIMEWAY TESTING LABORATORIES. It may not be reproduced rather in its entirety or in part and it may not be used for adverting. The client to whom the report is issued may, however, show or send it . or a certified copy there of prepared by the SHENZHEN TIMEWAY TESTING LABORATORIES to his customer. Supplier or others persons directly concerned. SHENZHEN TIMEWAY TESTING LABORATORIES will not, without the consent of the client enter into any discussion of correspondence with any third party concerning the contents of the report.
In the event of the improper use of the report. SHENZHEN TIMEWAY TESTING LABORATORIES reserves the rights to withdraw it and to adopt any other remedies which may be appropriate.

(2)Frequency stability versus ambient temperature

Test Results

CH5

Environment Temperature(℃)	Power Supplied (Vdc)	Frequency Measured (MHz)	Frequency Deviation (ppm)	Nominal Frequency	Limit(ppm)
50	4.5	467.612456	-0.09	467.6125MHz	±2.5
40	4.5	467.612473	-0.06	467.6125MHz	±2.5
30	4.5	467.612449	-0.11	467.6125MHz	±2.5
20	4.5	467.612432	-0.15	467.6125MHz	±2.5
10	4.5	467.612468	-0.07	467.6125MHz	±2.5
0	4.5	467.612452	-0.10	467.6125MHz	±2.5
-10	4.5	467.612481	-0.04	467.6125MHz	±2.5
-20	4.5	467.612444	-0.12	467.6125MHz	±2.5
-30	4.5	467.612429	-0.15	467.6125MHz	±2.5

CH9

Environment Temperature(℃)	Power Supplied (Vdc)	Frequency Measured (MHz)	Frequency Error (ppm)	Nominal Frequency	Limit(ppm)
50	4.5	462.687563	0.14	462.6875MHz	±2.5
40	4.5	462.687527	0.06	462.6875MHz	±2.5
30	4.5	462.687539	0.08	462.6875MHz	±2.5
20	4.5	462.687554	0.12	462.6875MHz	±2.5
10	4.5	462.687586	0.19	462.6875MHz	±2.5
0	4.5	462.687571	0.15	462.6875MHz	±2.5
-10	4.5	462.687560	0.13	462.6875MHz	±2.5
-20	4.5	462.687532	0.07	462.6875MHz	±2.5
-30	4.5	462.687569	0.15	462.6875MHz	±2.5

The report refers only to the sample tested and does not apply to the bulk.
This report is issued in confidence to the client and it will be strictly treated as such by the SHENZHEN TIMEWAY TESTING LABORATORIES. It may not be reproduced rather in its entirety or in part and it may not be used for adverting. The client to whom the report is issued may, however, show or send it . or a certified copy there of prepared by the SHENZHEN TIMEWAY TESTING LABORATORIES to his customer. Supplier or others persons directly concerned. SHENZHEN TIMEWAY TESTING LABORATORIES will not, without the consent of the client enter into any discussion of correspondence with any third party concerning the contents of the report.
In the event of the improper use of the report. SHENZHEN TIMEWAY TESTING LABORATORIES reserves the rights to withdraw it and to adopt any other remedies which may be appropriate.

7. EMISSION BANDWIDTH and Mask

7.1 PROVISIONS APPLICABLE

Per FCC §2.1049 and FCC §95.633(a) (c), the authorized bandwidth for emission type F3E or F2D transmitted by an FRS Unit is 12.5 kHz.

(1)At least 25 dB (decibels) on any frequency removed from the center of the authorized bandwidth by more than 50% up to and including 100% of the authorized bandwidth.

(3) At least 35 dB on any frequency removed from the center of the authorized bandwidth by more than 100% up to and including 250% of the authorized bandwidth.

(7) At least 43 + 10 log10 (T) dB on any frequency removed from the center of the authorized bandwidth by more than 250%.

7.2 MEASUREMENT PROCEDURE

TIA-603-C, section 2.2.11

7.3 Test Setup Block Diagram

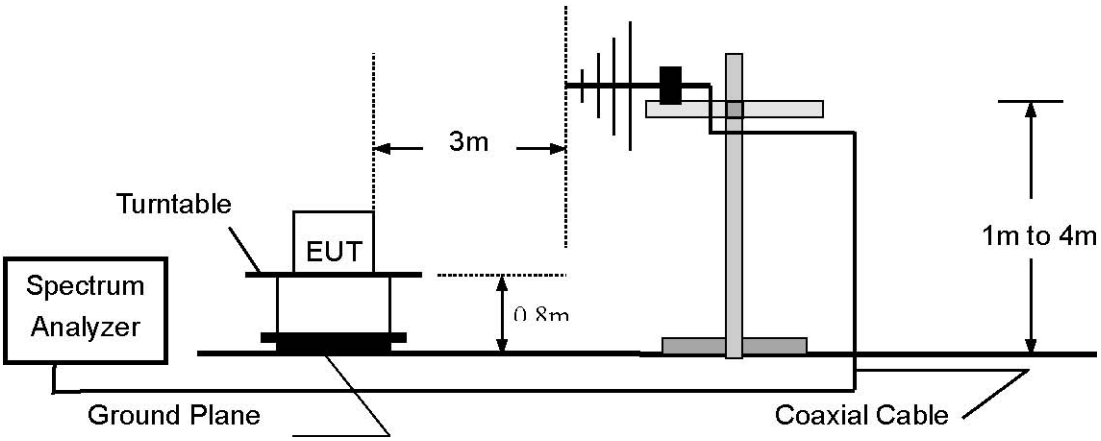

7.4 Measurement Rusult:

Bandwidth			
Operating Frequency	Test Data	Limits	Result
467.6125MHz	8.82kHz	12.5kHz	Pass
462.6875MHz	7.82kHz	12.5kHz	Pass

The report refers only to the sample tested and does not apply to the bulk.
This report is issued in confidence to the client and it will be strictly treated as such by the SHENZHEN TIMEWAY TESTING LABORATORIES. It may not be reproduced rather in its entirety or in part and it may not be used for adverting. The client to whom the report is issued may, however, show or send it . or a certified copy there of prepared by the SHENZHEN TIMEWAY TESTING LABORATORIES to his customer. Supplier or others persons directly concerned. SHENZHEN TIMEWAY TESTING LABORATORIES will not, without the consent of the client enter into any discussion of correspondence with any third party concerning the contents of the report.
In the event of the improper use of the report. SHENZHEN TIMEWAY TESTING LABORATORIES reserves the rights to withdraw it and to adopt any other remedies which may be appropriate.

Emission Designator:

Bn=2M + 2DK

Where M = 3 KHz, D = 2.5 KHz, K = 1

Bn =2*3 + 2*2.5 = 11KHz

Type of emission: 11K0F3E

7.5 Test Plots:

For channel 467.6125MHz

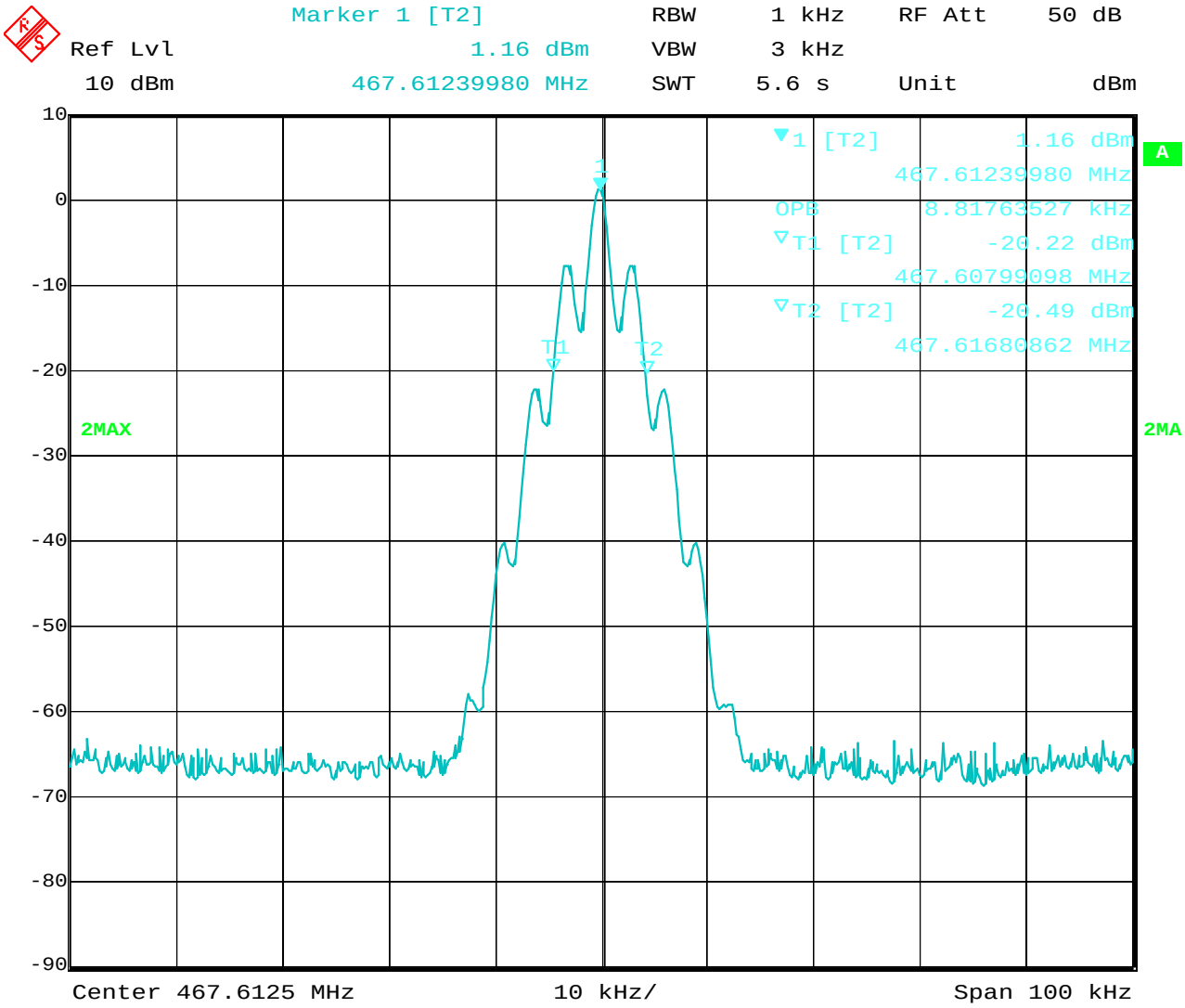

Date: 17.JUL.2015 15:42:32

The report refers only to the sample tested and does not apply to the bulk.
This report is issued in confidence to the client and it will be strictly treated as such by the SHENZHEN TIMEWAY TESTING LABORATORIES. It may not be reproduced rather in its entirety or in part and it may not be used for adverting. The client to whom the report is issued may, however, show or send it . or a certified copy there of prepared by the SHENZHEN TIMEWAY TESTING LABORATORIES to his customer. Supplier or others persons directly concerned. SHENZHEN TIMEWAY TESTING LABORATORIES will not, without the consent of the client enter into any discussion of correspondence with any third party concerning the contents of the report.
In the event of the improper use of the report. SHENZHEN TIMEWAY TESTING LABORATORIES reserves the rights to withdraw it and to adopt any other remedies which may be appropriate.

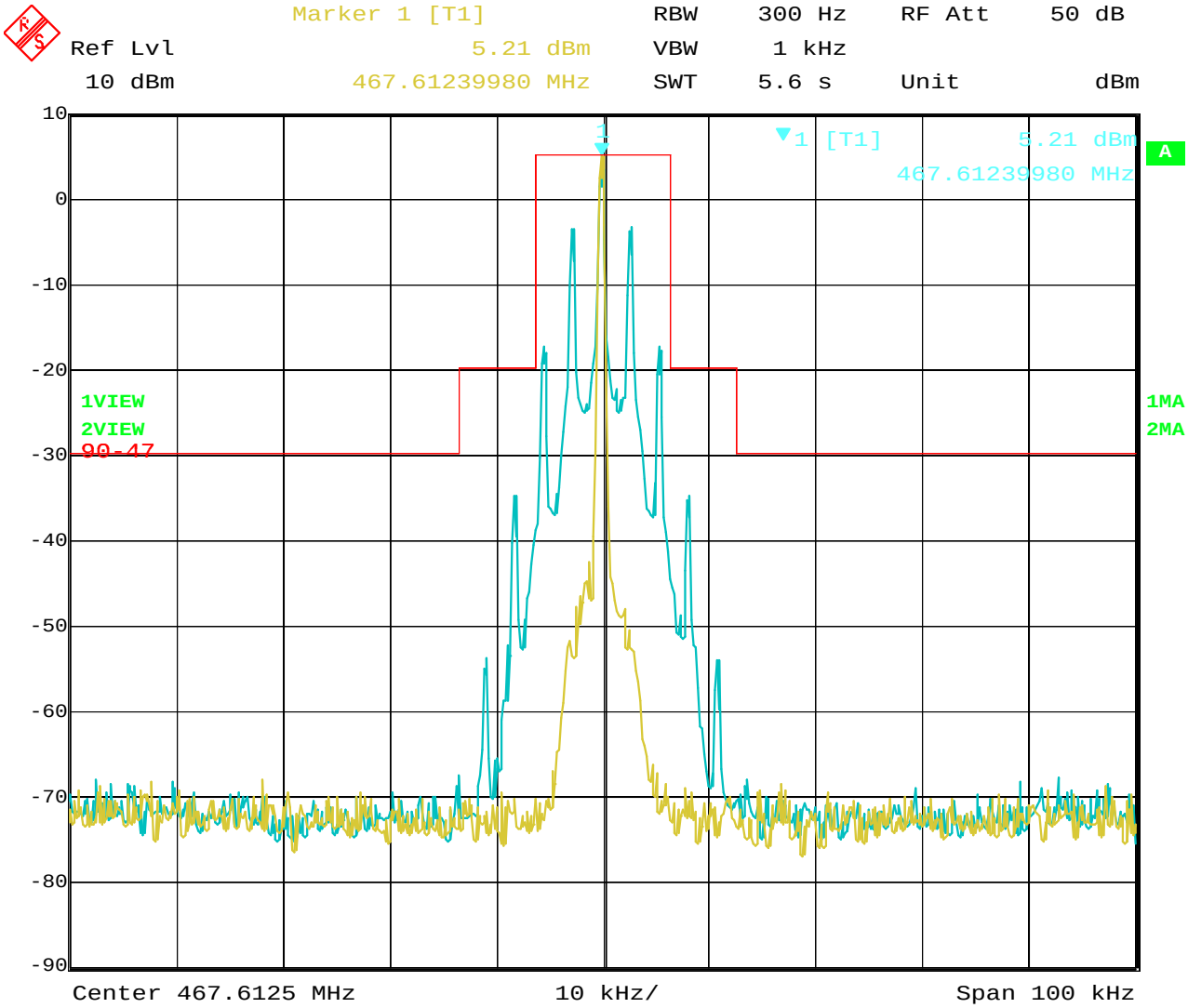

Date: 1.AUG.2015 16:54:16

The report refers only to the sample tested and does not apply to the bulk.
This report is issued in confidence to the client and it will be strictly treated as such by the SHENZHEN TIMEWAY TESTING LABORATORIES. It may not be reproduced rather in its entirety or in part and it may not be used for adverting. The client to whom the report is issued may, however, show or send it . or a certified copy there of prepared by the SHENZHEN TIMEWAY TESTING LABORATORIES to his customer. Supplier or others persons directly concerned. SHENZHEN TIMEWAY TESTING LABORATORIES will not, without the consent of the client enter into any discussion of correspondence with any third party concerning the contents of the report.
In the event of the improper use of the report. SHENZHEN TIMEWAY TESTING LABORATORIES reserves the rights to withdraw it and to adopt any other remedies which may be appropriate.

For channel 462.6875MHz

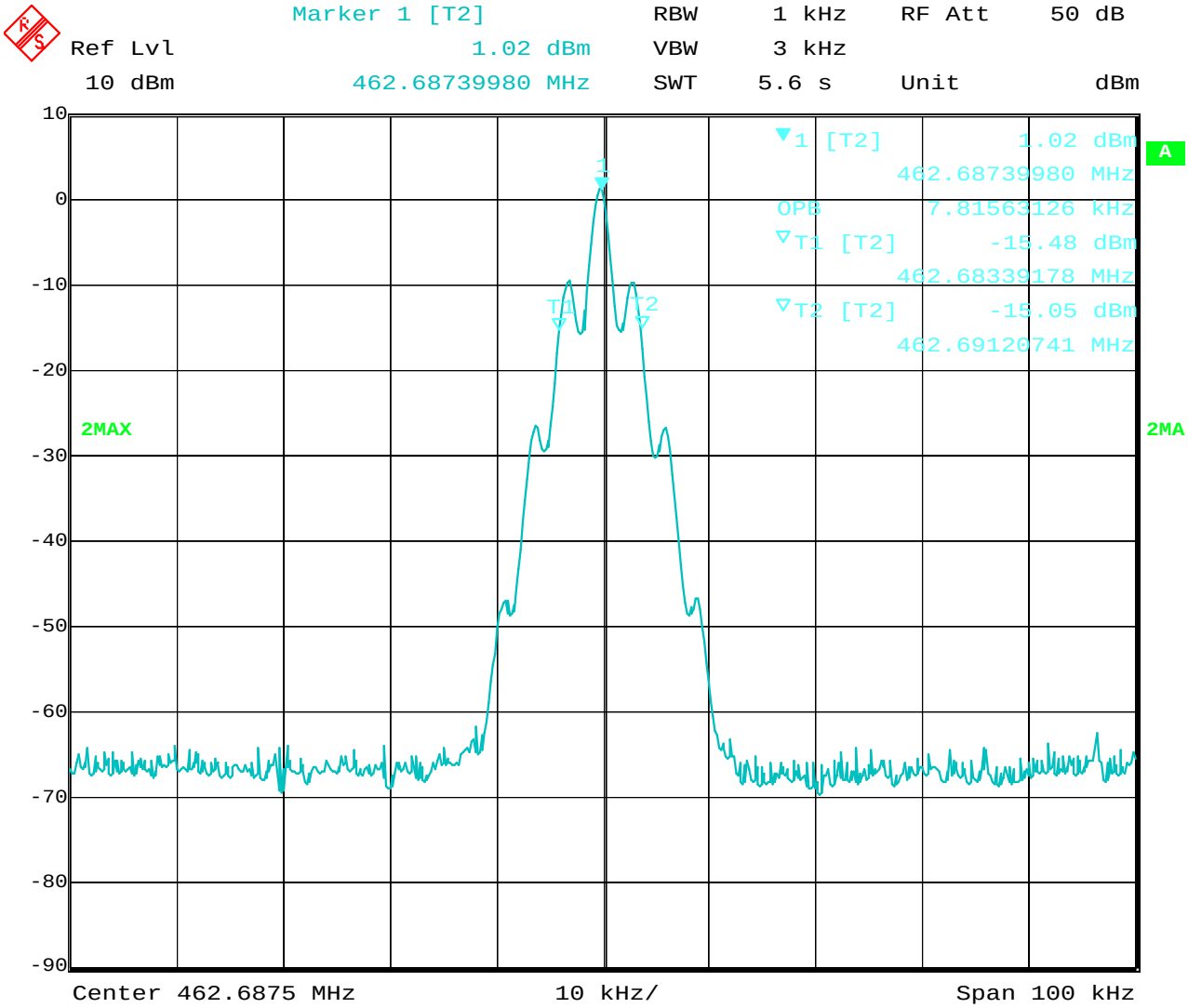

Date: 17.JUL.2015 16:18:05

The report refers only to the sample tested and does not apply to the bulk.
This report is issued in confidence to the client and it will be strictly treated as such by the SHENZHEN TIMEWAY TESTING LABORATORIES. It may not be reproduced rather in its entirety or in part and it may not be used for adverting. The client to whom the report is issued may, however, show or send it . or a certified copy there of prepared by the SHENZHEN TIMEWAY TESTING LABORATORIES to his customer. Supplier or others persons directly concerned. SHENZHEN TIMEWAY TESTING LABORATORIES will not, without the consent of the client enter into any discussion of correspondence with any third party concerning the contents of the report.
In the event of the improper use of the report. SHENZHEN TIMEWAY TESTING LABORATORIES reserves the rights to withdraw it and to adopt any other remedies which may be appropriate.

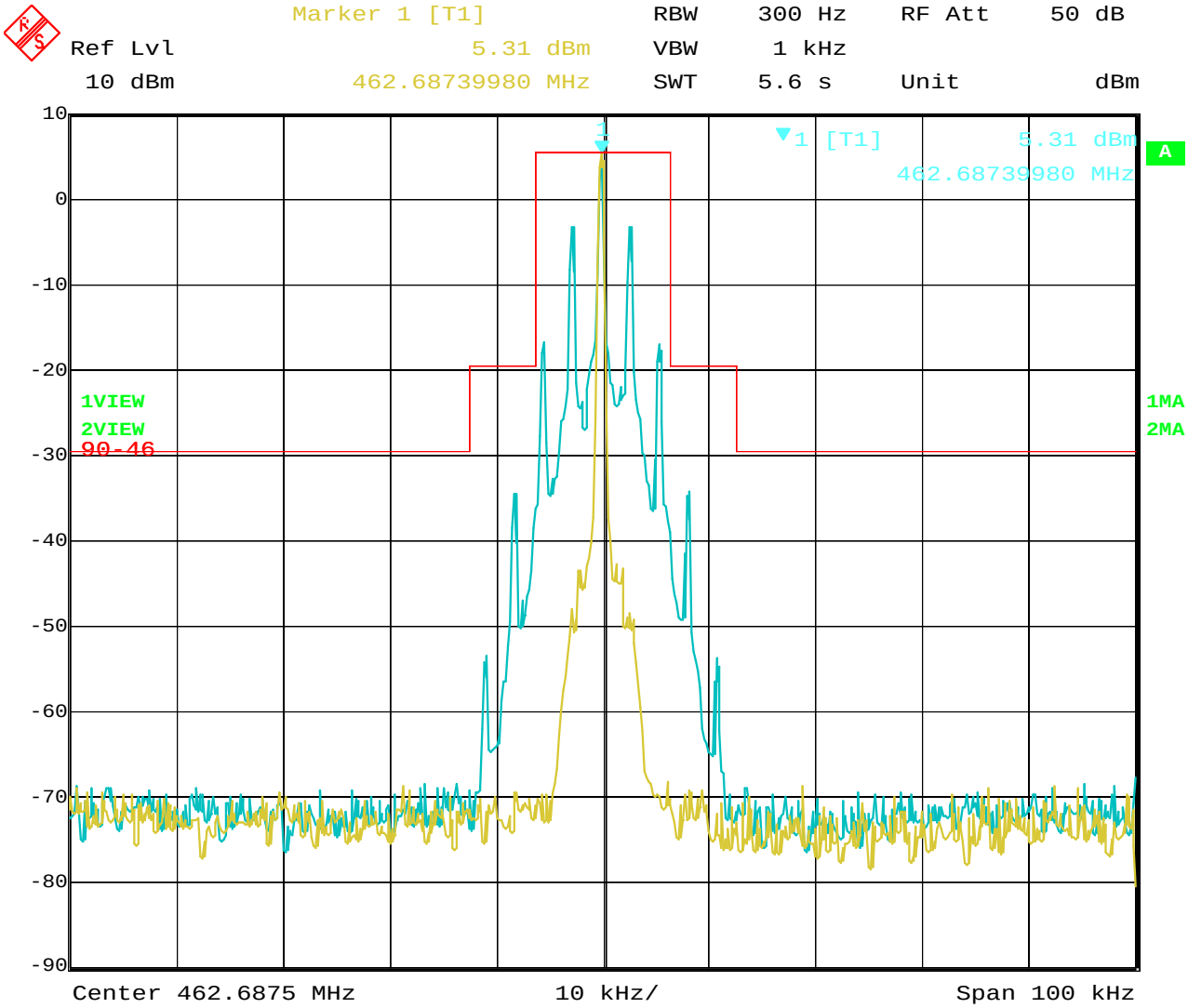

Date: 1.AUG.2015 16:43:45

The report refers only to the sample tested and does not apply to the bulk.
This report is issued in confidence to the client and it will be strictly treated as such by the SHENZHEN TIMEWAY TESTING LABORATORIES. It may not be reproduced rather in its entirety or in part and it may not be used for adverting. The client to whom the report is issued may, however, show or send it . or a certified copy there of prepared by the SHENZHEN TIMEWAY TESTING LABORATORIES to his customer. Supplier or others persons directly concerned. SHENZHEN TIMEWAY TESTING LABORATORIES will not, without the consent of the client enter into any discussion of correspondence with any third party concerning the contents of the report.
In the event of the improper use of the report. SHENZHEN TIMEWAY TESTING LABORATORIES reserves the rights to withdraw it and to adopt any other remedies which may be appropriate.

CH 9

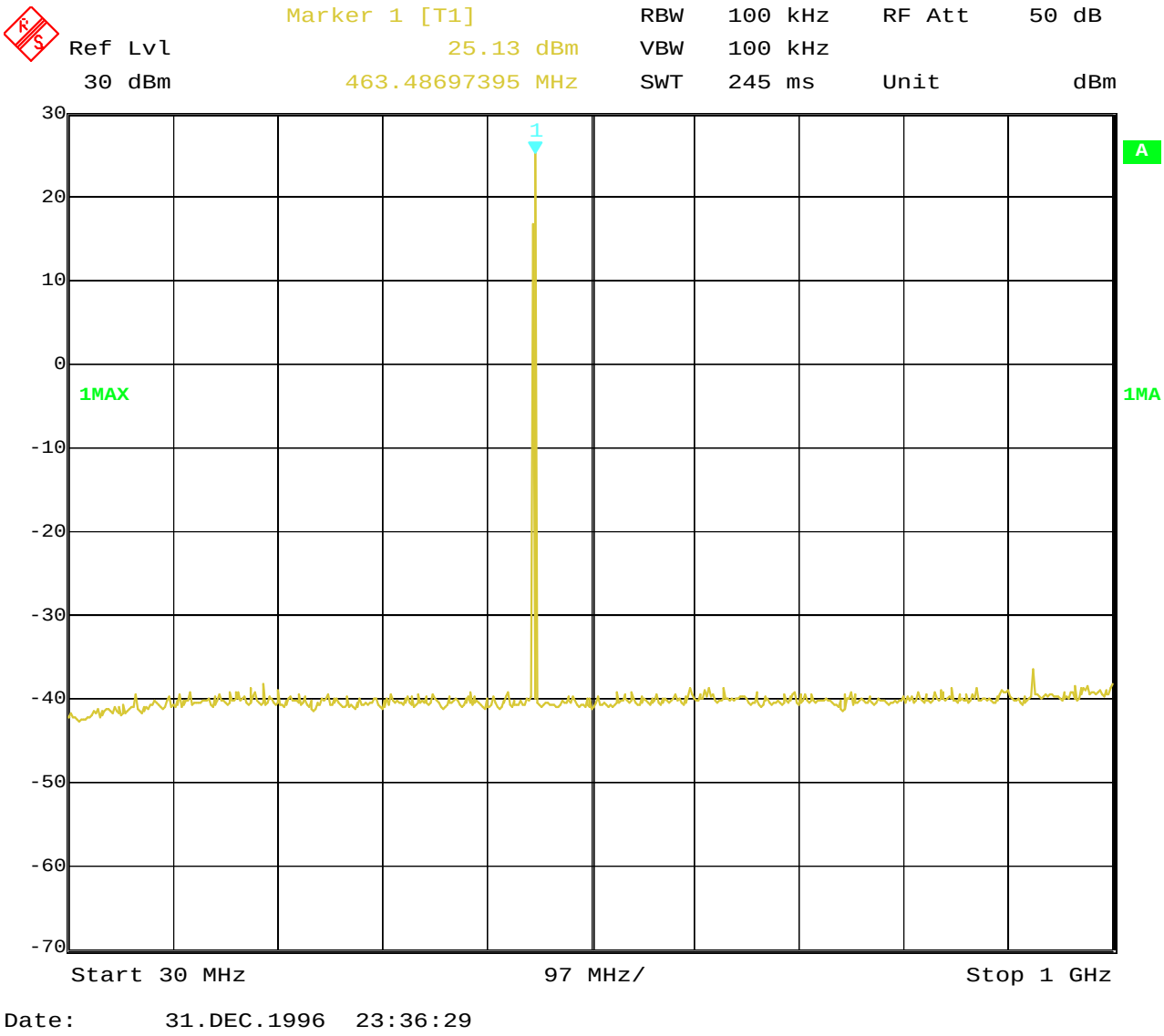

Date: 31.DEC.1996 23:36:29

The report refers only to the sample tested and does not apply to the bulk.
This report is issued in confidence to the client and it will be strictly treated as such by the SHENZHEN TIMEWAY TESTING LABORATORIES. It may not be reproduced rather in its entirety or in part and it may not be used for adverting. The client to whom the report is issued may, however, show or send it . or a certified copy there of prepared by the SHENZHEN TIMEWAY TESTING LABORATORIES to his customer. Supplier or others persons directly concerned. SHENZHEN TIMEWAY TESTING LABORATORIES will not, without the consent of the client enter into any discussion of correspondence with any third party concerning the contents of the report.
In the event of the improper use of the report. SHENZHEN TIMEWAY TESTING LABORATORIES reserves the rights to withdraw it and to adopt any other remedies which may be appropriate.

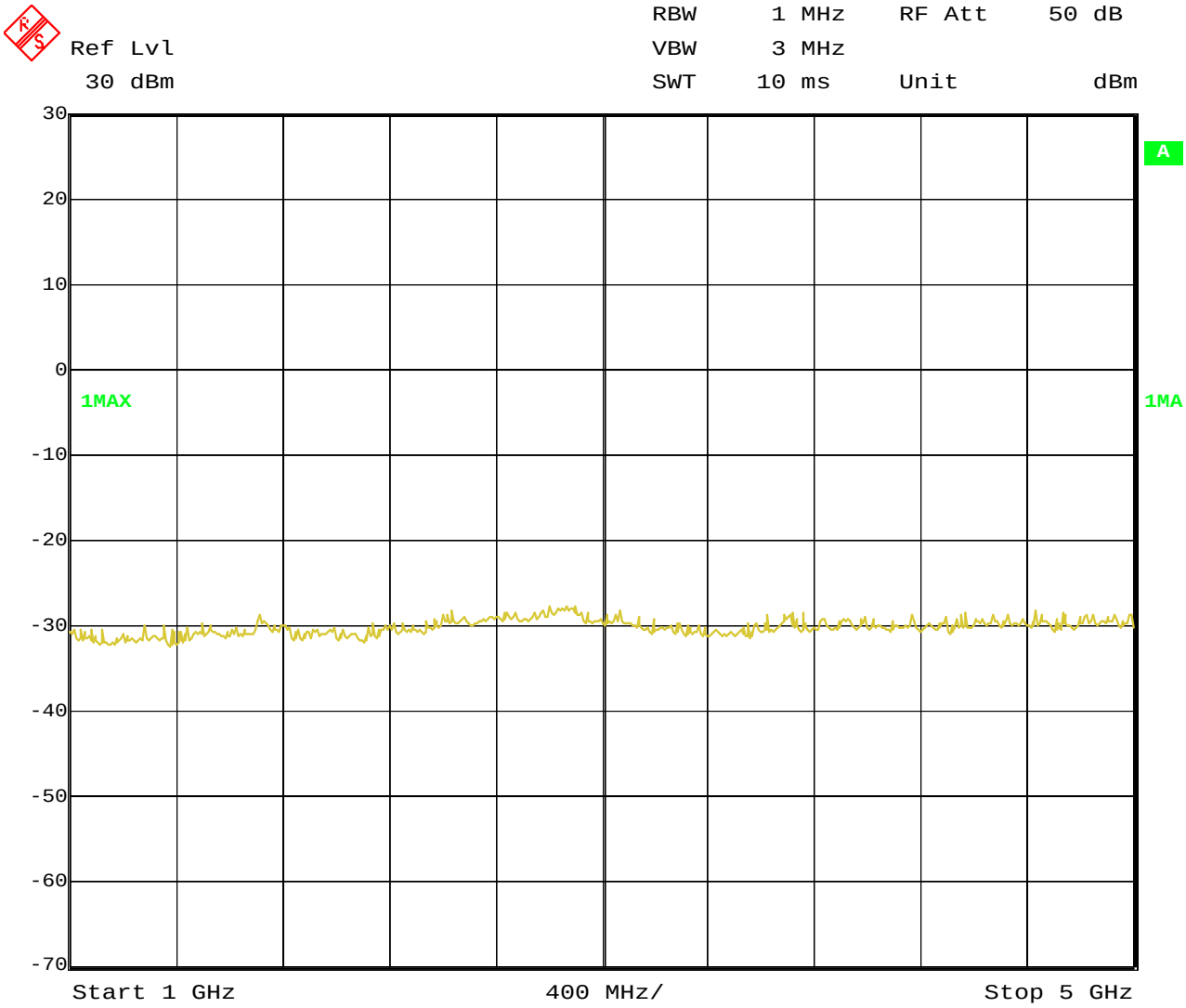

Date: 31.DEC.1996 23:37:50

The report refers only to the sample tested and does not apply to the bulk.
This report is issued in confidence to the client and it will be strictly treated as such by the SHENZHEN TIMEWAY TESTING LABORATORIES. It may not be reproduced rather in its entirety or in part and it may not be used for adverting. The client to whom the report is issued may, however, show or send it . or a certified copy there of prepared by the SHENZHEN TIMEWAY TESTING LABORATORIES to his customer. Supplier or others persons directly concerned. SHENZHEN TIMEWAY TESTING LABORATORIES will not, without the consent of the client enter into any discussion of correspondence with any third party concerning the contents of the report.
In the event of the improper use of the report. SHENZHEN TIMEWAY TESTING LABORATORIES reserves the rights to withdraw it and to adopt any other remedies which may be appropriate.

CH 5

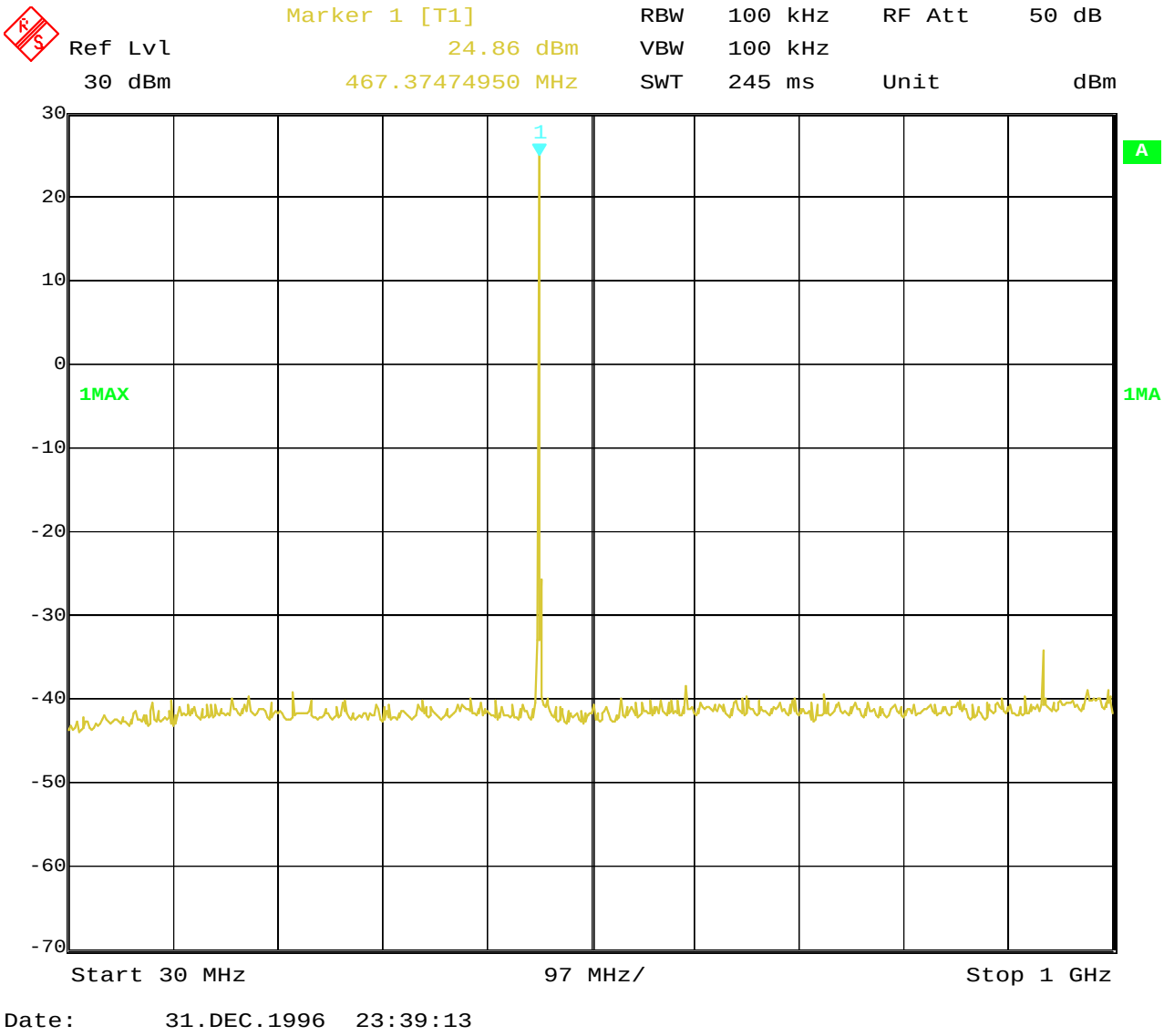

The report refers only to the sample tested and does not apply to the bulk.
This report is issued in confidence to the client and it will be strictly treated as such by the SHENZHEN TIMEWAY TESTING LABORATORIES. It may not be reproduced rather in its entirety or in part and it may not be used for adverting. The client to whom the report is issued may, however, show or send it . or a certified copy there of prepared by the SHENZHEN TIMEWAY TESTING LABORATORIES to his customer. Supplier or others persons directly concerned. SHENZHEN TIMEWAY TESTING LABORATORIES will not, without the consent of the client enter into any discussion of correspondence with any third party concerning the contents of the report.
In the event of the improper use of the report. SHENZHEN TIMEWAY TESTING LABORATORIES reserves the rights to withdraw it and to adopt any other remedies which may be appropriate.

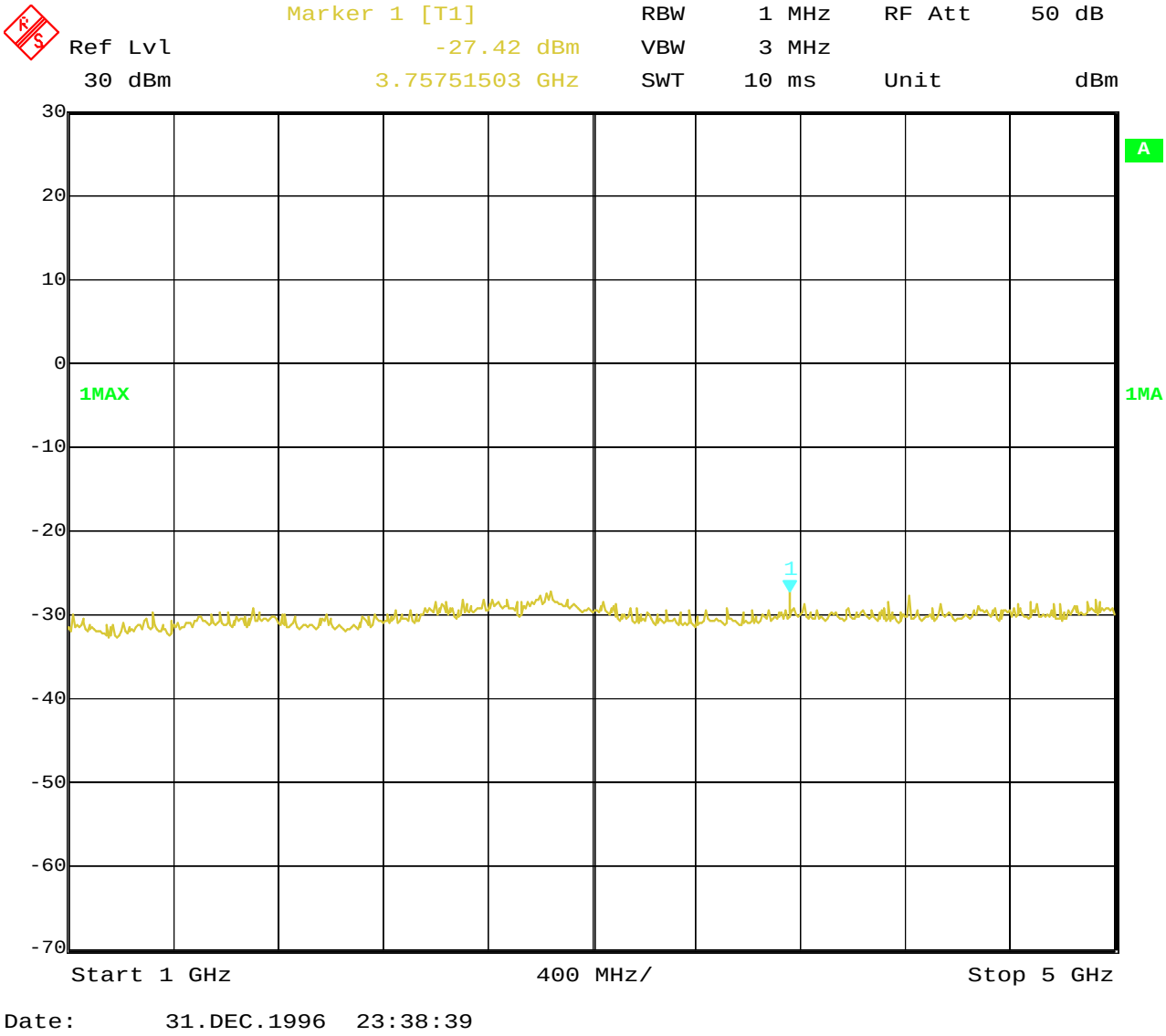

Date: 31.DEC.1996 23:38:39

The report refers only to the sample tested and does not apply to the bulk.
This report is issued in confidence to the client and it will be strictly treated as such by the SHENZHEN TIMEWAY TESTING LABORATORIES. It may not be reproduced rather in its entirety or in part and it may not be used for adverting. The client to whom the report is issued may, however, show or send it . or a certified copy there of prepared by the SHENZHEN TIMEWAY TESTING LABORATORIES to his customer. Supplier or others persons directly concerned. SHENZHEN TIMEWAY TESTING LABORATORIES will not, without the consent of the client enter into any discussion of correspondence with any third party concerning the contents of the report.
In the event of the improper use of the report. SHENZHEN TIMEWAY TESTING LABORATORIES reserves the rights to withdraw it and to adopt any other remedies which may be appropriate.

8. UNWANTED RADIATION

8.1 PROVISIONS APPLICABLE

FCC §2.1053 and §95.635

8.2 MEASUREMENT PROCEDURE (Radiated Emissions)

(1). On a test site, the EUT shall be placed on a turntable, and in the position closest to the normal use as declared by the user.

(2). The test antenna shall be oriented initially for vertical polarization located 3m from the EUT to correspond to the transmitter.

(3). The output of the antenna shall be connected to the measuring receiver and either a peak or quasi-peak detector was used for the measurement as indicated on the report. The detector selection is based on how close the emission level was approaching the limit.

(4). The transmitter shall be switched on; if possible, without the modulation and the measurement receiver shall be tuned to the frequency of the transmitter under test.

(5). The test antenna shall be raised and lowered through the specified range of height until the measuring receiver detects a maximum signal level.

(6). The transmitter shall than be rotated through 360°in the horizontal plane, until the maximum signal level is detected by the measuring receiver.

(7). The test antenna shall be raised and lowered again through the specified range of height until the measuring receiver detects a maximum signal level.

(8). The maximum signal level detected by the measuring receiver shall be noted.

(9). The measurement shall be repeated with the test antenna set to horizontal polarization.

(10). Replace the antenna with a proper Antenna (substitution antenna).

(11). The substitution antenna shall be oriented for vertical polarization and, if necessary, the length of the substitution antenna shall be adjusted to correspond to the frequency of transmitting.

(12). The substitution antenna shall be connected to a calibrated signal generator.

(13). If necessary, the input attenuator setting of the measuring receiver shall be adjusted in order to increase the sensitivity of the measuring receiver.

(14). The test antenna shall be raised and lowered through the specified range of the height to ensure that the maximum signal is received.

(15). The input signal to substitution antenna shall be adjusted to the level that produces a level detected by the measuring receiver, that is equal to the level noted while the transmitter radiated power was measured, corrected for the change of input attenuation setting of the measuring receiver.

(16). The input level to the substitution antenna shall be recorded as power level in dBm, corrected for any change of input attenuator setting of the measuring receiver.

(17). The measurement shall be repeated with the test antenna and the substitution antenna oriented for horizontal polarization.

The report refers only to the sample tested and does not apply to the bulk.
This report is issued in confidence to the client and it will be strictly treated as such by the SHENZHEN TIMEWAY TESTING LABORATORIES. It may not be reproduced rather in its entirety or in part and it may not be used for adverting. The client to whom the report is issued may, however, show or send it . or a certified copy there of prepared by the SHENZHEN TIMEWAY TESTING LABORATORIES to his customer. Supplier or others persons directly concerned. SHENZHEN TIMEWAY TESTING LABORATORIES will not, without the consent of the client enter into any discussion of correspondence with any third party concerning the contents of the report.
In the event of the improper use of the report. SHENZHEN TIMEWAY TESTING LABORATORIES reserves the rights to withdraw it and to adopt any other remedies which may be appropriate.

8.3 Substitution Method: (Radiated Emissions)

Radiated Below 1GHz

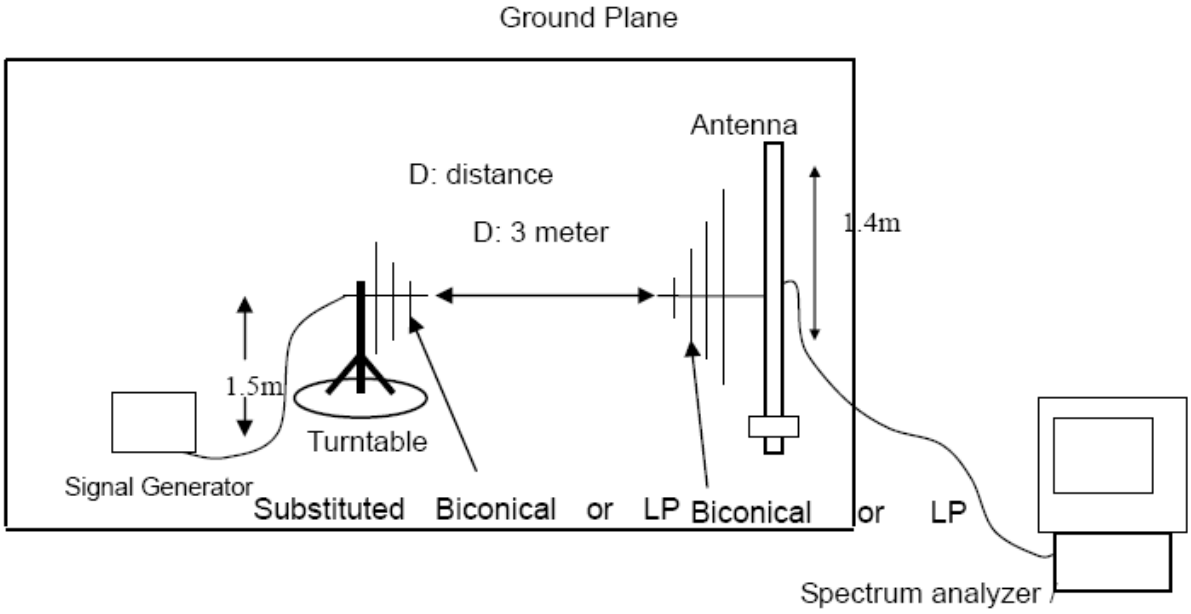

Radiated Above 1 GHz

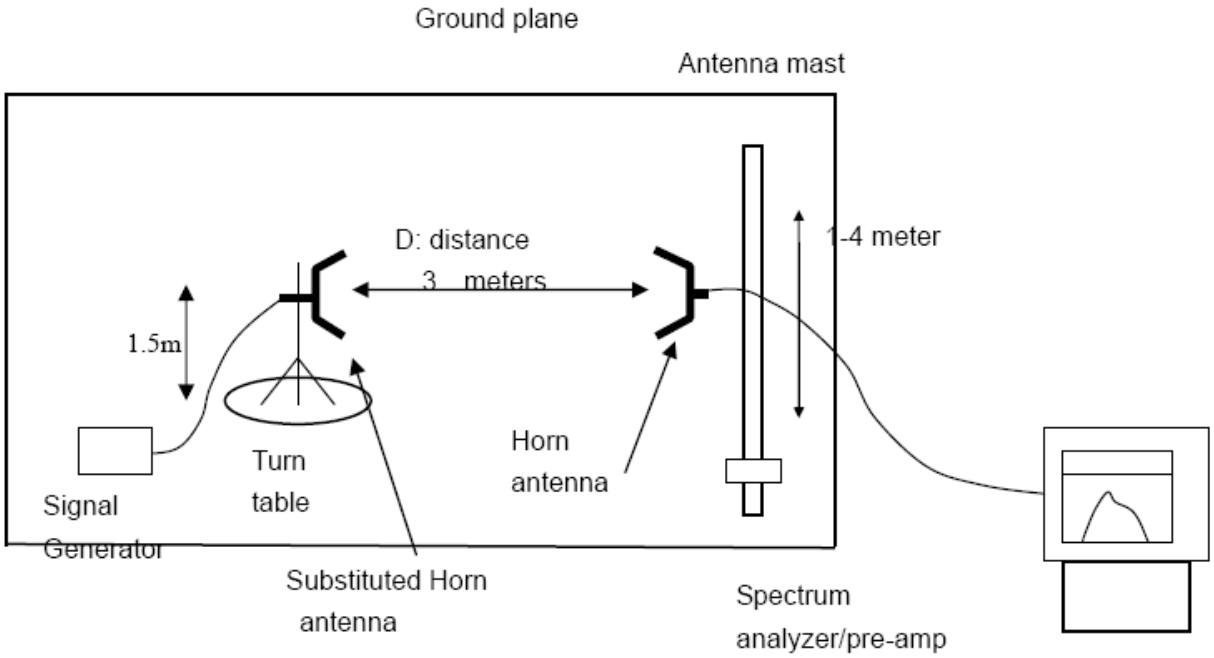

The report refers only to the sample tested and does not apply to the bulk.
This report is issued in confidence to the client and it will be strictly treated as such by the SHENZHEN TIMEWAY TESTING LABORATORIES. It may not be reproduced rather in its entirety or in part and it may not be used for adverting. The client to whom the report is issued may, however, show or send it . or a certified copy there of prepared by the SHENZHEN TIMEWAY TESTING LABORATORIES to his customer. Supplier or others persons directly concerned. SHENZHEN TIMEWAY TESTING LABORATORIES will not, without the consent of the client enter into any discussion of correspondence with any third party concerning the contents of the report.
In the event of the improper use of the report. SHENZHEN TIMEWAY TESTING LABORATORIES reserves the rights to withdraw it and to adopt any other remedies which may be appropriate.

8.4 MEASUREMENT RESULTS:

Calculation: Limit (dBm)= EL-43-10log10 (T)=-13dBm

Notes: EL is the emission level of the Output Power expressed in dBm, in this application, the EL is 27 dBm

CH5

Frequency (MHz)	Antennal Polarity	Emission (dBm)	Limit (dBm)
935.225	Vertical	-37.06	-13
1402.838	Vertical	-42.12	-13
1870.45	Vertical	-46.97	-13
935.225	Horizontal	-40.65	-13
1402.838	Horizontal	-44.34	-13

CH9

Frequency (MHz)	Antennal Polarity	Emission (dBm)	Limit (dBm)
925.375	Vertical	-38.02	-13
1388.063	Vertical	-43.63	-13
1850.75	Vertical	-47.29	-13
925.375	Horizontal	-42.18	-13
1388.063	Horizontal	-45.70	-13

Note: ERP was recorded.

The report refers only to the sample tested and does not apply to the bulk.
This report is issued in confidence to the client and it will be strictly treated as such by the SHENZHEN TIMEWAY TESTING LABORATORIES. It may not be reproduced rather in its entirety or in part and it may not be used for adverting. The client to whom the report is issued may, however, show or send it . or a certified copy there of prepared by the SHENZHEN TIMEWAY TESTING LABORATORIES to his customer. Supplier or others persons directly concerned. SHENZHEN TIMEWAY TESTING LABORATORIES will not, without the consent of the client enter into any discussion of correspondence with any third party concerning the contents of the report.
In the event of the improper use of the report. SHENZHEN TIMEWAY TESTING LABORATORIES reserves the rights to withdraw it and to adopt any other remedies which may be appropriate.

9. Modulation Characteristics

9.1 PROVISIONS APPLICABLE

According to CFR 47 section 2.1047(a), for Voice Modulation Communication Equipment, the frequency response of the audio modulation circuit over a range of 100 to 5000Hz shall be measured.

Part95.637: A FRS unit that transmits emission type F3E must not exceed a peak frequency deviation of plus or minus 2.5 kHz, and the audio frequency response must not exceed 3.125 kHz

9.2 MEASUREMENT METHOD

9.2.1 Modulation Limit

(1). Configure the EUT as shown in figure 1, adjust the audio input for 60% of rated system deviation at 1KHz using this level as a reference (0dB) and vary the input level from –20 to +20dB. Record the frequency deviation obtained as a function of the input level.

(2). Repeat step 1 with input frequency changing to 300, 1000, 1500 and 3000Hz in sequence.

9.2.2 Audio Frequency Response

(1). The EUT and test equipment were set up as shown in figure 2.

(2). Adjust the Modulation Analyzer for the following setting:

a) High-pass filter : off

b) Low-pass filter : 15 kHz

c) Detector : positive peak

d) Function : FM

(3). The audio signal input was adjusted to obtain 20 % modulation at 1 kHz, and this point was taken as the 0 dB reference level.

(4). With input levels held constant and below limiting at all frequencies, the audio signal generator was varied from 300 Hz to 5 kHz.

(5). The response in dB relative to 1 kHz was then measured, using the Modulation Analyzer.

The report refers only to the sample tested and does not apply to the bulk.
This report is issued in confidence to the client and it will be strictly treated as such by the SHENZHEN TIMEWAY TESTING LABORATORIES. It may not be reproduced rather in its entirety or in part and it may not be used for adverting. The client to whom the report is issued may, however, show or send it . or a certified copy there of prepared by the SHENZHEN TIMEWAY TESTING LABORATORIES to his customer. Supplier or others persons directly concerned. SHENZHEN TIMEWAY TESTING LABORATORIES will not, without the consent of the client enter into any discussion of correspondence with any third party concerning the contents of the report.
In the event of the improper use of the report. SHENZHEN TIMEWAY TESTING LABORATORIES reserves the rights to withdraw it and to adopt any other remedies which may be appropriate.

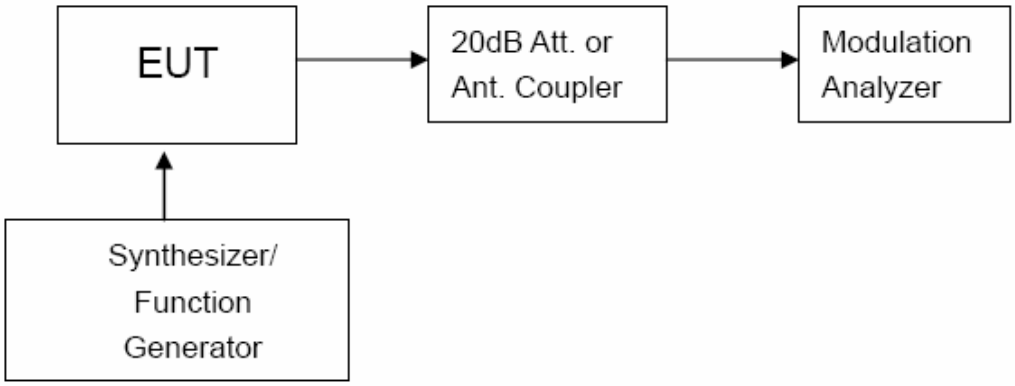

Figure 1: Modulation characteristic measurement configuration

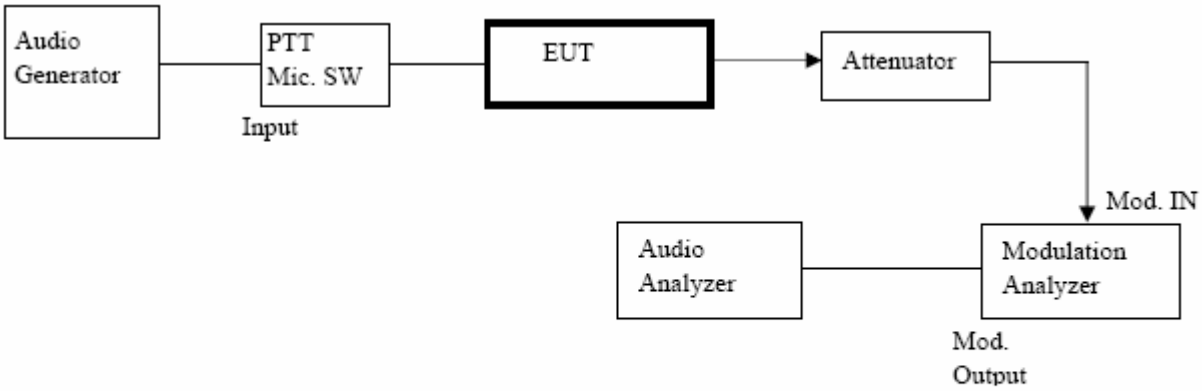

Figure 2: Audio Frequency Response Measurement Configure

The report refers only to the sample tested and does not apply to the bulk.
This report is issued in confidence to the client and it will be strictly treated as such by the SHENZHEN TIMEWAY TESTING LABORATORIES. It may not be reproduced rather in its entirety or in part and it may not be used for adverting. The client to whom the report is issued may, however, show or send it . or a certified copy there of prepared by the SHENZHEN TIMEWAY TESTING LABORATORIES to his customer. Supplier or others persons directly concerned. SHENZHEN TIMEWAY TESTING LABORATORIES will not, without the consent of the client enter into any discussion of correspondence with any third party concerning the contents of the report.
In the event of the improper use of the report. SHENZHEN TIMEWAY TESTING LABORATORIES reserves the rights to withdraw it and to adopt any other remedies which may be appropriate.

9.4 MEASUREMENT RESULT

(a). Modulation Limit:

CH9

Modulation Level (dB)	Peak Freq. Deviation At 300 Hz	Peak Freq. Deviation At 1000 Hz	Peak Freq. Deviation At 1500 Hz	Peak Freq. Deviation At 3000 Hz
-20	0.07	0.13	0.2	0.26
-15	0.12	0.23	0.38	0.51
-10	0.19	0.37	0.5	0.65
-5	0.26	0.49	0.6	0.87
0	0.35	0.68	0.88	1.09
5	0.4	0.75	1.02	1.33
10	0.59	0.86	1.33	1.56
15	0.65	0.96	1.59	1.78
20	0.87	1.13	1.67	2.08

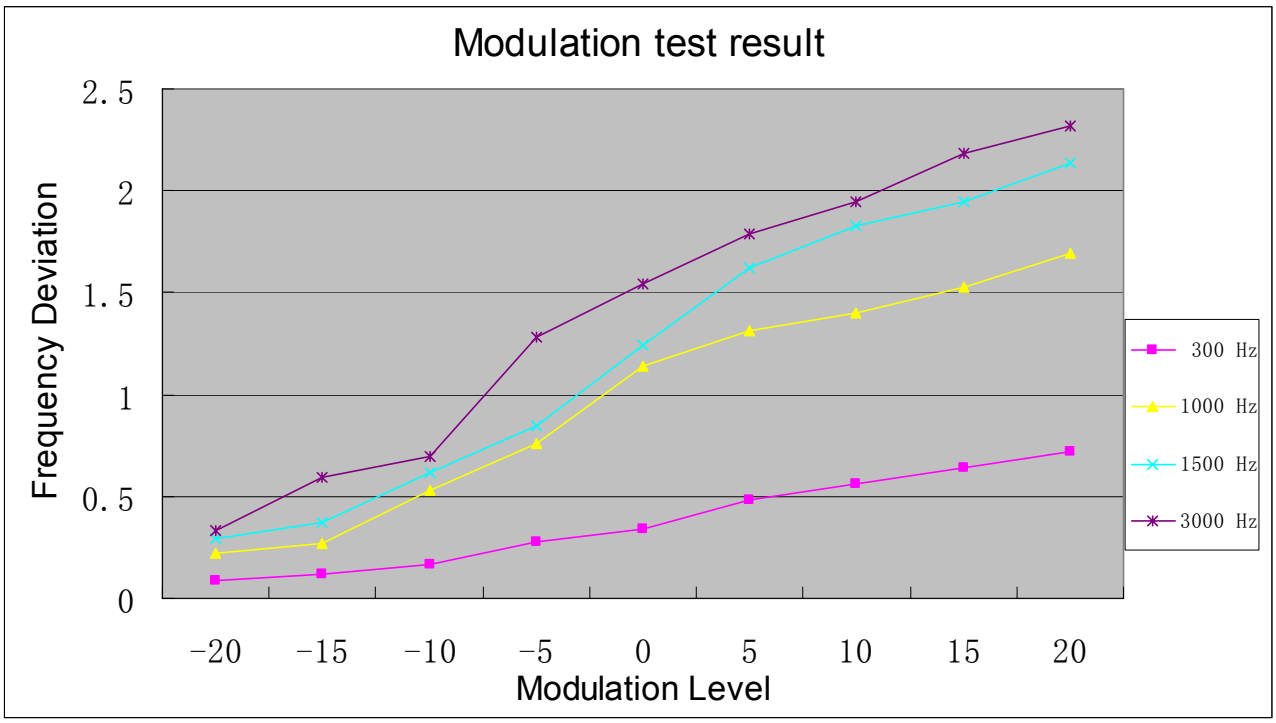

The report refers only to the sample tested and does not apply to the bulk.
This report is issued in confidence to the client and it will be strictly treated as such by the SHENZHEN TIMEWAY TESTING LABORATORIES. It may not be reproduced rather in its entirety or in part and it may not be used for adverting. The client to whom the report is issued may, however, show or send it . or a certified copy there of prepared by the SHENZHEN TIMEWAY TESTING LABORATORIES to his customer. Supplier or others persons directly concerned. SHENZHEN TIMEWAY TESTING LABORATORIES will not, without the consent of the client enter into any discussion of correspondence with any third party concerning the contents of the report.
In the event of the improper use of the report. SHENZHEN TIMEWAY TESTING LABORATORIES reserves the rights to withdraw it and to adopt any other remedies which may be appropriate.

(b). Audio Frequency Response:

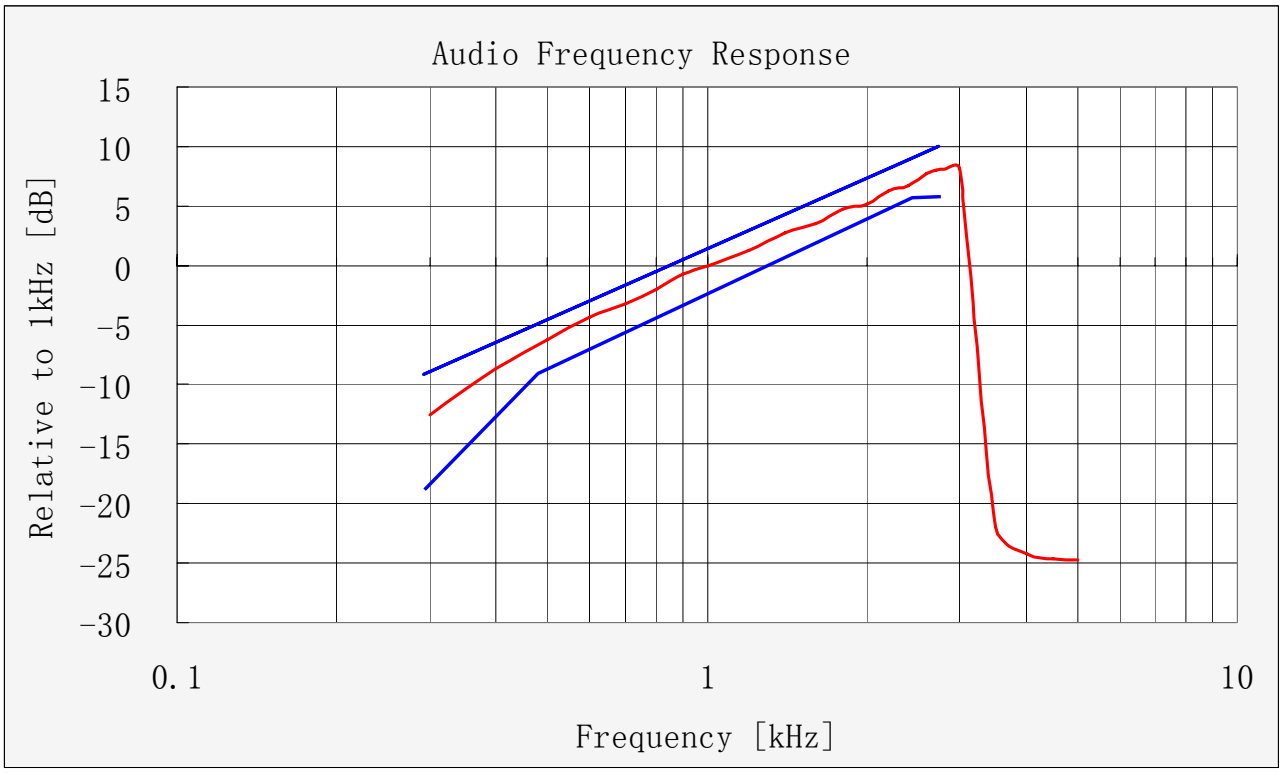

The report refers only to the sample tested and does not apply to the bulk.
This report is issued in confidence to the client and it will be strictly treated as such by the SHENZHEN TIMEWAY TESTING LABORATORIES. It may not be reproduced rather in its entirety or in part and it may not be used for adverting. The client to whom the report is issued may, however, show or send it . or a certified copy there of prepared by the SHENZHEN TIMEWAY TESTING LABORATORIES to his customer. Supplier or others persons directly concerned. SHENZHEN TIMEWAY TESTING LABORATORIES will not, without the consent of the client enter into any discussion of correspondence with any third party concerning the contents of the report.
In the event of the improper use of the report. SHENZHEN TIMEWAY TESTING LABORATORIES reserves the rights to withdraw it and to adopt any other remedies which may be appropriate.

10. MAXIMUM TRANSMITTER POWER

10.1 PROVISIONS APPLICABLE

Per FCC §2.1046 and §95.639(d), No FRS Unit, under any condition of modulation, shall exceed a 0.5 W effective radiated power (ERP).

10.2 TEST PROCEDURE

The transmitter was placed on a wooden turntable, and it was transmitting into a non-radiating load, which was also placed on the turntable.

The measurement antenna was placed at a distance of 3 meters from the EUT. During the tests, the antenna height and polarization as well as EUT azimuth were varied in order to identify the maximum level of emissions from the EUT .The test was performed by placing the EUT on 3-orthogonal axis.

Remove the EUT and replace it with substitution antenna. A signal generator was connected to the substitution antenna by a non-radiating cable. The absolute levels of the emissions were measured by the substitution.

10.3 TEST RESULT

Power Measurement Results	
Channel	Measurement Result (dBm)
CH5(467.6125MHz)	23.20
CH9(462.6875MHz)	23.03

Note: ERP was recorded.

Conducted Power Measurement Results		
Channel	Measurement Result (dBm)	
	Peak	AV
CH5(467.6125MHz)	25.41	24.97
CH9(462.6875MHz)	25.27	24.77

The report refers only to the sample tested and does not apply to the bulk.
This report is issued in confidence to the client and it will be strictly treated as such by the SHENZHEN TIMEWAY TESTING LABORATORIES. It may not be reproduced rather in its entirety or in part and it may not be used for adverting. The client to whom the report is issued may, however, show or send it . or a certified copy there of prepared by the SHENZHEN TIMEWAY TESTING LABORATORIES to his customer. Supplier or others persons directly concerned. SHENZHEN TIMEWAY TESTING LABORATORIES will not, without the consent of the client enter into any discussion of correspondence with any third party concerning the contents of the report.
In the event of the improper use of the report. SHENZHEN TIMEWAY TESTING LABORATORIES reserves the rights to withdraw it and to adopt any other remedies which may be appropriate.

11. Radiated Emission on Receiving Mode

11.1 Provisions Applicable

FCC Part 15 Subpart B Section 15.109

11.2 TEST METHOD

ANSI C 63.4: 2014

11.4 MEASURE RESULT (MEASURED AT 3M USING FCC PART15 B LIMITS)

The report refers only to the sample tested and does not apply to the bulk.
This report is issued in confidence to the client and it will be strictly treated as such by the SHENZHEN TIMEWAY TESTING LABORATORIES. It may not be reproduced rather in its entirety or in part and it may not be used for adverting. The client to whom the report is issued may, however, show or send it . or a certified copy there of prepared by the SHENZHEN TIMEWAY TESTING LABORATORIES to his customer. Supplier or others persons directly concerned. SHENZHEN TIMEWAY TESTING LABORATORIES will not, without the consent of the client enter into any discussion of correspondence with any third party concerning the contents of the report.
In the event of the improper use of the report. SHENZHEN TIMEWAY TESTING LABORATORIES reserves the rights to withdraw it and to adopt any other remedies which may be appropriate.

A Radiated Disturbance In Vertical (30MHz----1000MHz)

EUT set Condition: **Receiving**
Level: **Class B**
Results: **PASS**

Please refer to following diagram for individual

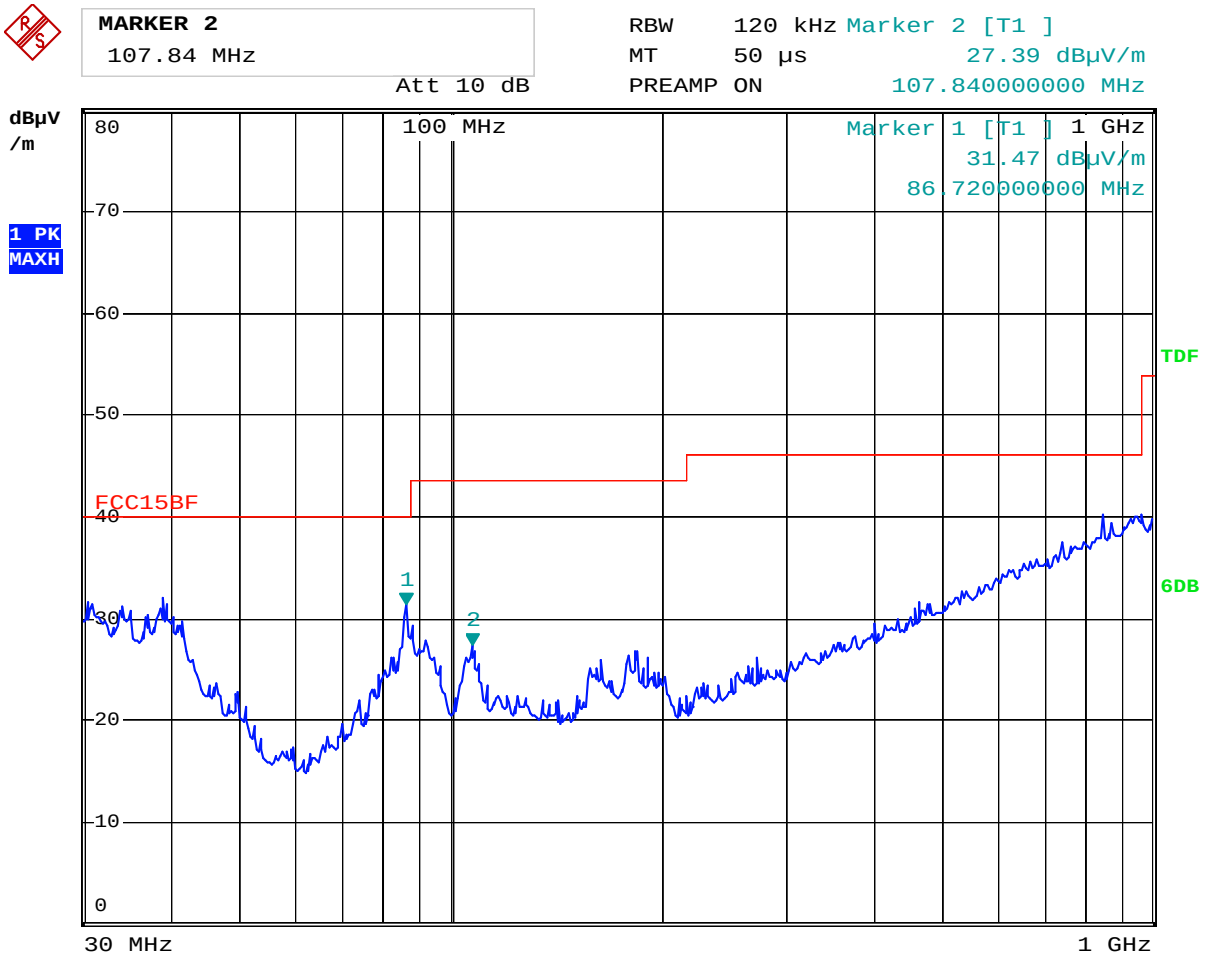

Date: 6.JUL.2015 09:42:37

Frequency (MHz)	Level@3m (dBµV/m)	Antenna Polarity	Limit@3m (dBµV/m)
107.840	27.39	V	43.50
86.720	31.47	V	40.00

The report refers only to the sample tested and does not apply to the bulk.
This report is issued in confidence to the client and it will be strictly treated as such by the SHENZHEN TIMEWAY TESTING LABORATORIES. It may not be reproduced rather in its entirety or in part and it may not be used for adverting. The client to whom the report is issued may, however, show or send it . or a certified copy there of prepared by the SHENZHEN TIMEWAY TESTING LABORATORIES to his customer. Supplier or others persons directly concerned. SHENZHEN TIMEWAY TESTING LABORATORIES will not, without the consent of the client enter into any discussion of correspondence with any third party concerning the contents of the report.
In the event of the improper use of the report. SHENZHEN TIMEWAY TESTING LABORATORIES reserves the rights to withdraw it and to adopt any other remedies which may be appropriate.

B Radiated Disturbance In Horizontal (30MHz----1000MHz)

EUT set Condition: **Receiving**
Level: **Class B**
Results: **PASS**
Please refer to following diagram for individual

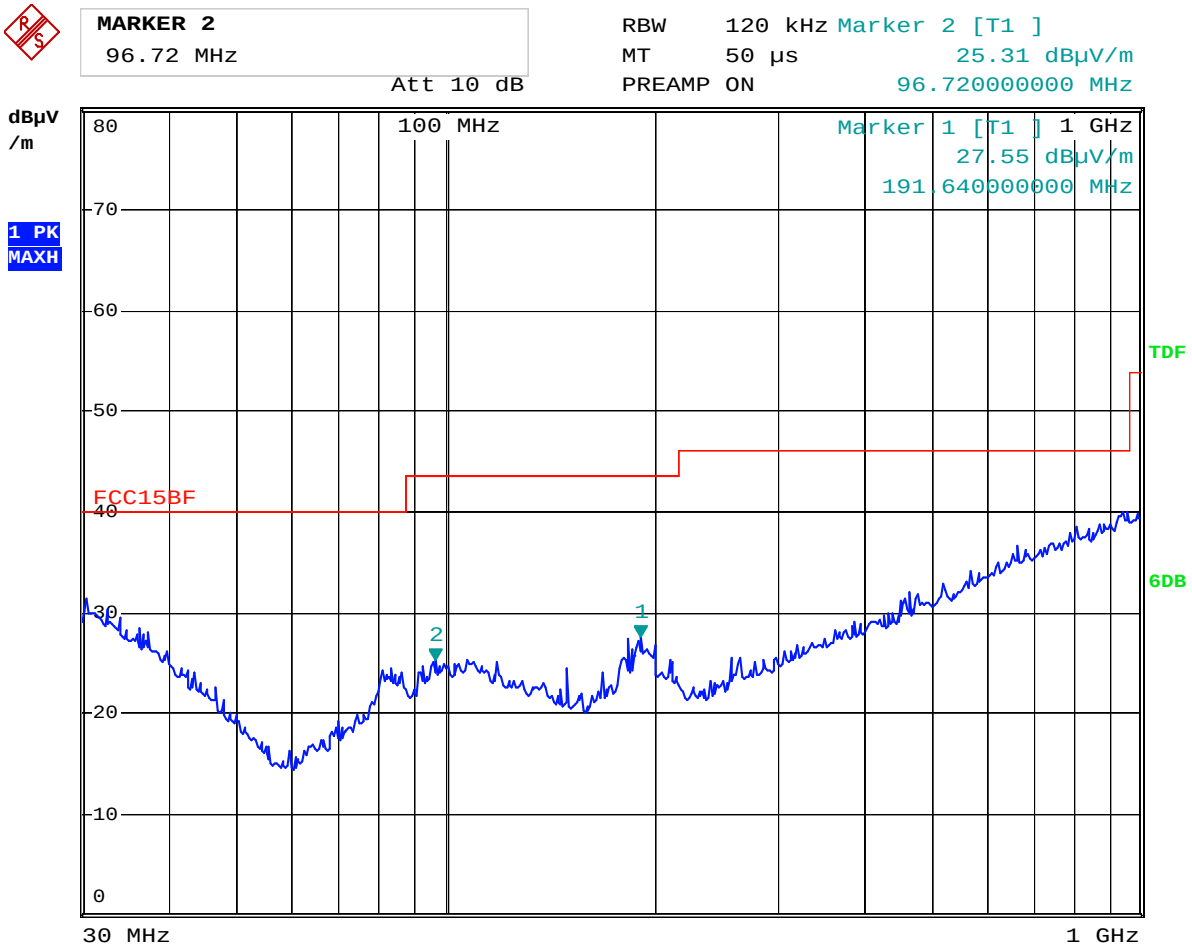

Date: 6.JUL.2015 09:39:07

Frequency (MHz)	Level@3m (dBµV/m)	Antenna Polarity	Limit@3m (dBµV/m)
96.720	25.31	H	43.50
191.640	27.55	H	43.50

The report refers only to the sample tested and does not apply to the bulk.
This report is issued in confidence to the client and it will be strictly treated as such by the SHENZHEN TIMEWAY TESTING LABORATORIES. It may not be reproduced rather in its entirety or in part and it may not be used for adverting. The client to whom the report is issued may, however, show or send it . or a certified copy there of prepared by the SHENZHEN TIMEWAY TESTING LABORATORIES to his customer. Supplier or others persons directly concerned. SHENZHEN TIMEWAY TESTING LABORATORIES will not, without the consent of the client enter into any discussion of correspondence with any third party concerning the contents of the report.
In the event of the improper use of the report. SHENZHEN TIMEWAY TESTING LABORATORIES reserves the rights to withdraw it and to adopt any other remedies which may be appropriate.

12.0 FCC ID Label

FCC ID: 2AFC8-FWAN10A

This device complies with part 95 of the FCC rules. Operation is subject to the following two conditions (1) this device may not cause harmful interference, and (2) this device must accept any interference received, including interference that may cause undesired operation.

The label must not be a stick-on paper label. The label on these products must be permanently affixed to the product and readily visible at the time of purchase and must last the expected lifetime of the equipment not be readily detachable.

Mark Location:

The report refers only to the sample tested and does not apply to the bulk.
This report is issued in confidence to the client and it will be strictly treated as such by the SHENZHEN TIMEWAY TESTING LABORATORIES. It may not be reproduced rather in its entirety or in part and it may not be used for adverting. The client to whom the report is issued may, however, show or send it . or a certified copy there of prepared by the SHENZHEN TIMEWAY TESTING LABORATORIES to his customer. Supplier or others persons directly concerned. SHENZHEN TIMEWAY TESTING LABORATORIES will not, without the consent of the client enter into any discussion of correspondence with any third party concerning the contents of the report.
In the event of the improper use of the report. SHENZHEN TIMEWAY TESTING LABORATORIES reserves the rights to withdraw it and to adopt any other remedies which may be appropriate.

13.0 Photo of testing

13.1 Conducted test View--

N/A

The report refers only to the sample tested and does not apply to the bulk.
This report is issued in confidence to the client and it will be strictly treated as such by the SHENZHEN TIMEWAY TESTING LABORATORIES. It may not be reproduced rather in its entirety or in part and it may not be used for adverting. The client to whom the report is issued may, however, show or send it . or a certified copy there of prepared by the SHENZHEN TIMEWAY TESTING LABORATORIES to his customer. Supplier or others persons directly concerned. SHENZHEN TIMEWAY TESTING LABORATORIES will not, without the consent of the client enter into any discussion of correspondence with any third party concerning the contents of the report.
In the event of the improper use of the report. SHENZHEN TIMEWAY TESTING LABORATORIES reserves the rights to withdraw it and to adopt any other remedies which may be appropriate.

13.2 Radiated emission test view

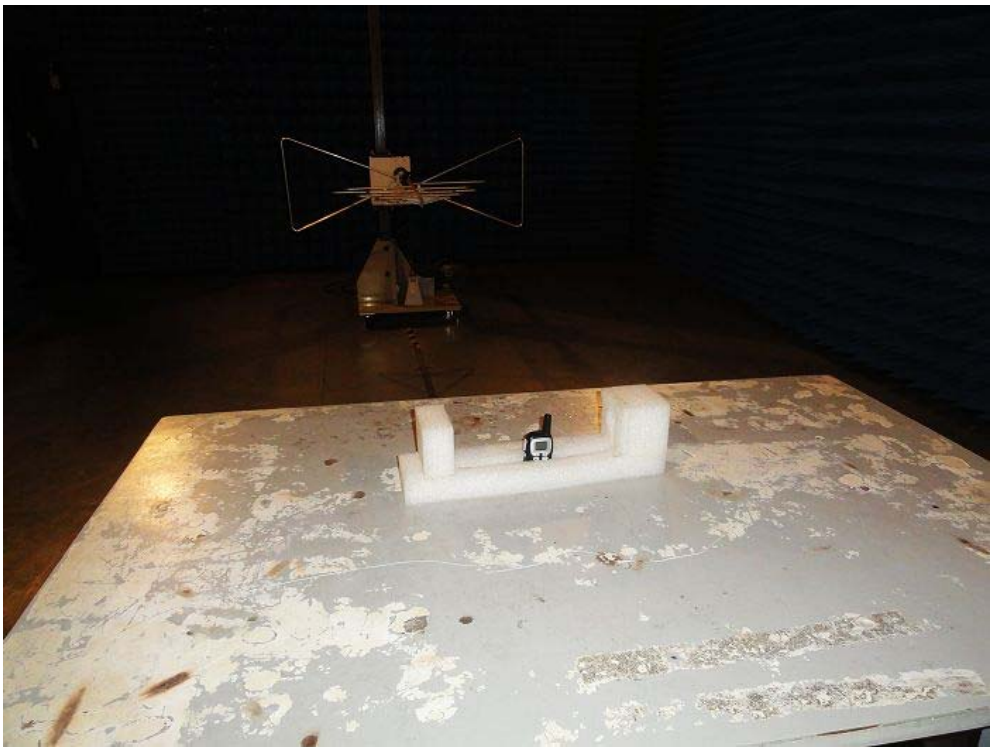

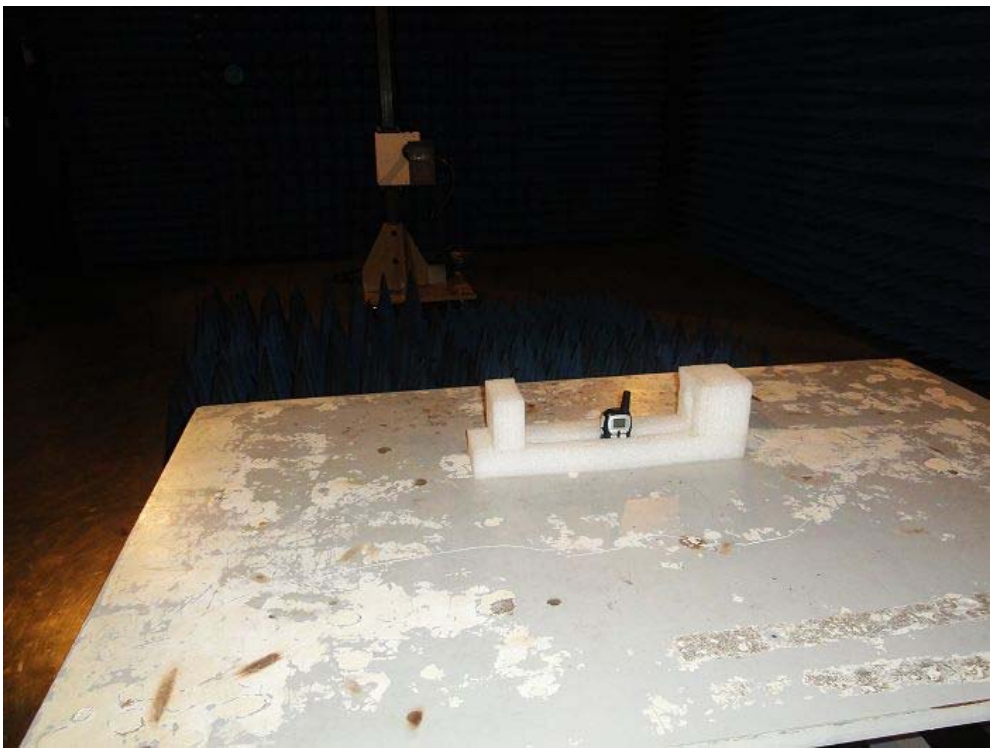

The report refers only to the sample tested and does not apply to the bulk.
This report is issued in confidence to the client and it will be strictly treated as such by the SHENZHEN TIMEWAY TESTING LABORATORIES. It may not be reproduced rather in its entirety or in part and it may not be used for adverting. The client to whom the report is issued may, however, show or send it . or a certified copy there of prepared by the SHENZHEN TIMEWAY TESTING LABORATORIES to his customer. Supplier or others persons directly concerned. SHENZHEN TIMEWAY TESTING LABORATORIES will not, without the consent of the client enter into any discussion of correspondence with any third party concerning the contents of the report.
In the event of the improper use of the report. SHENZHEN TIMEWAY TESTING LABORATORIES reserves the rights to withdraw it and to adopt any other remedies which may be appropriate.

Outside View

The report refers only to the sample tested and does not apply to the bulk.
This report is issued in confidence to the client and it will be strictly treated as such by the SHENZHEN TIMEWAY TESTING LABORATORIES. It may not be reproduced rather in its entirety or in part and it may not be used for adverting. The client to whom the report is issued may, however, show or send it . or a certified copy there of prepared by the SHENZHEN TIMEWAY TESTING LABORATORIES to his customer. Supplier or others persons directly concerned. SHENZHEN TIMEWAY TESTING LABORATORIES will not, without the consent of the client enter into any discussion of correspondence with any third party concerning the contents of the report.
In the event of the improper use of the report. SHENZHEN TIMEWAY TESTING LABORATORIES reserves the rights to withdraw it and to adopt any other remedies which may be appropriate.

Outside View

The report refers only to the sample tested and does not apply to the bulk.
This report is issued in confidence to the client and it will be strictly treated as such by the SHENZHEN TIMEWAY TESTING LABORATORIES. It may not be reproduced rather in its entirety or in part and it may not be used for adverting. The client to whom the report is issued may, however, show or send it . or a certified copy there of prepared by the SHENZHEN TIMEWAY TESTING LABORATORIES to his customer. Supplier or others persons directly concerned. SHENZHEN TIMEWAY TESTING LABORATORIES will not, without the consent of the client enter into any discussion of correspondence with any third party concerning the contents of the report.
In the event of the improper use of the report. SHENZHEN TIMEWAY TESTING LABORATORIES reserves the rights to withdraw it and to adopt any other remedies which may be appropriate.

Outside View

The report refers only to the sample tested and does not apply to the bulk.
This report is issued in confidence to the client and it will be strictly treated as such by the SHENZHEN TIMEWAY TESTING LABORATORIES. It may not be reproduced rather in its entirety or in part and it may not be used for adverting. The client to whom the report is issued may, however, show or send it . or a certified copy there of prepared by the SHENZHEN TIMEWAY TESTING LABORATORIES to his customer. Supplier or others persons directly concerned. SHENZHEN TIMEWAY TESTING LABORATORIES will not, without the consent of the client enter into any discussion of correspondence with any third party concerning the contents of the report.
In the event of the improper use of the report. SHENZHEN TIMEWAY TESTING LABORATORIES reserves the rights to withdraw it and to adopt any other remedies which may be appropriate.

Interior View

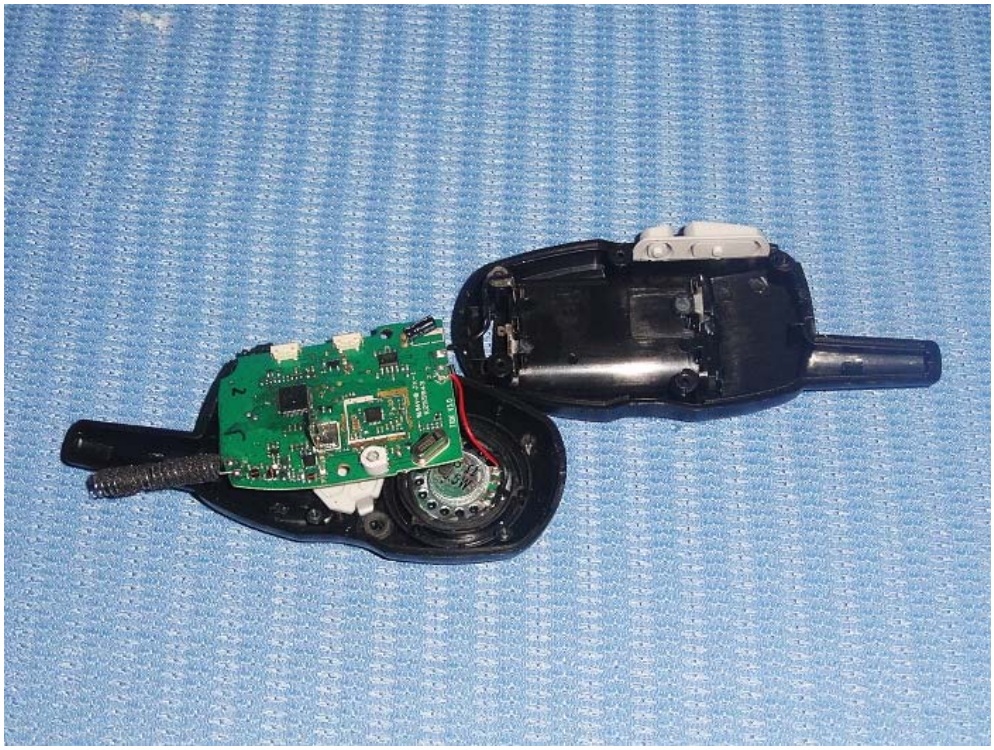

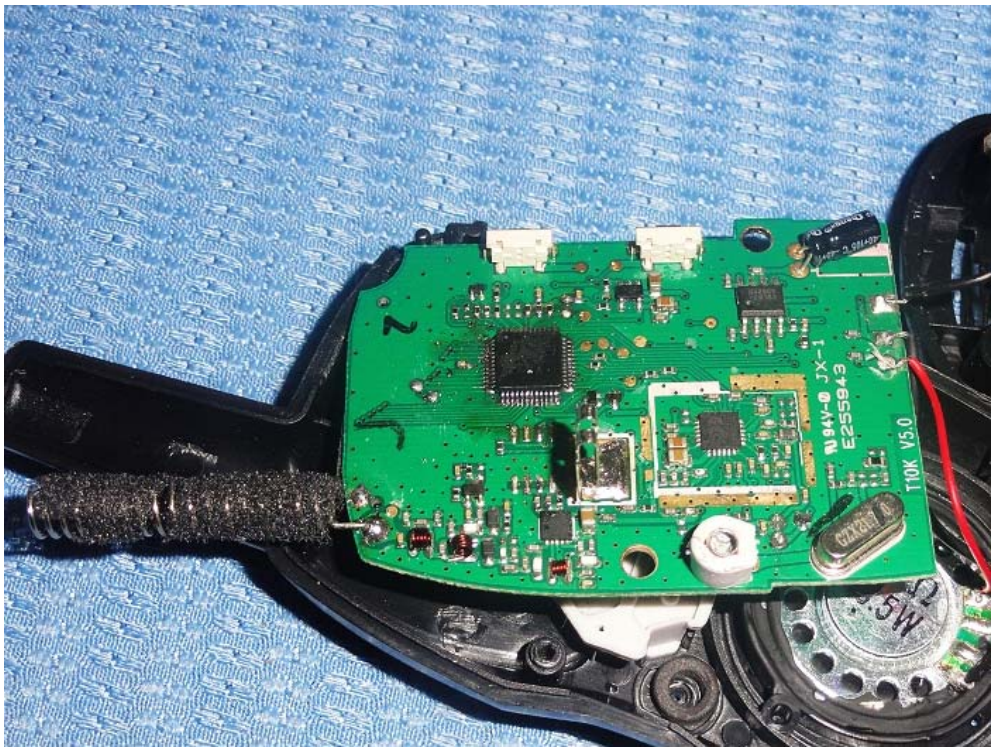

The report refers only to the sample tested and does not apply to the bulk.
This report is issued in confidence to the client and it will be strictly treated as such by the SHENZHEN TIMEWAY TESTING LABORATORIES. It may not be reproduced rather in its entirety or in part and it may not be used for adverting. The client to whom the report is issued may, however, show or send it . or a certified copy there of prepared by the SHENZHEN TIMEWAY TESTING LABORATORIES to his customer. Supplier or others persons directly concerned. SHENZHEN TIMEWAY TESTING LABORATORIES will not, without the consent of the client enter into any discussion of correspondence with any third party concerning the contents of the report.
In the event of the improper use of the report. SHENZHEN TIMEWAY TESTING LABORATORIES reserves the rights to withdraw it and to adopt any other remedies which may be appropriate.

Interior View

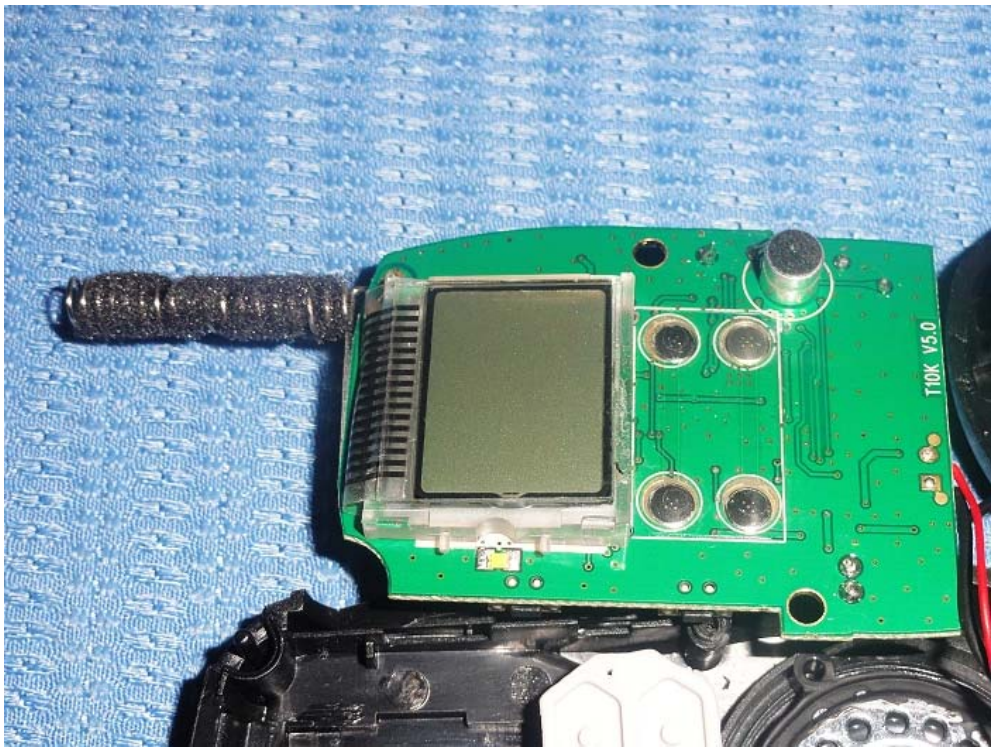

The report refers only to the sample tested and does not apply to the bulk.
This report is issued in confidence to the client and it will be strictly treated as such by the SHENZHEN TIMEWAY TESTING LABORATORIES. It may not be reproduced rather in its entirety or in part and it may not be used for adverting. The client to whom the report is issued may, however, show or send it . or a certified copy there of prepared by the SHENZHEN TIMEWAY TESTING LABORATORIES to his customer. Supplier or others persons directly concerned. SHENZHEN TIMEWAY TESTING LABORATORIES will not, without the consent of the client enter into any discussion of correspondence with any third party concerning the contents of the report.
In the event of the improper use of the report. SHENZHEN TIMEWAY TESTING LABORATORIES reserves the rights to withdraw it and to adopt any other remedies which may be appropriate.

Interior View

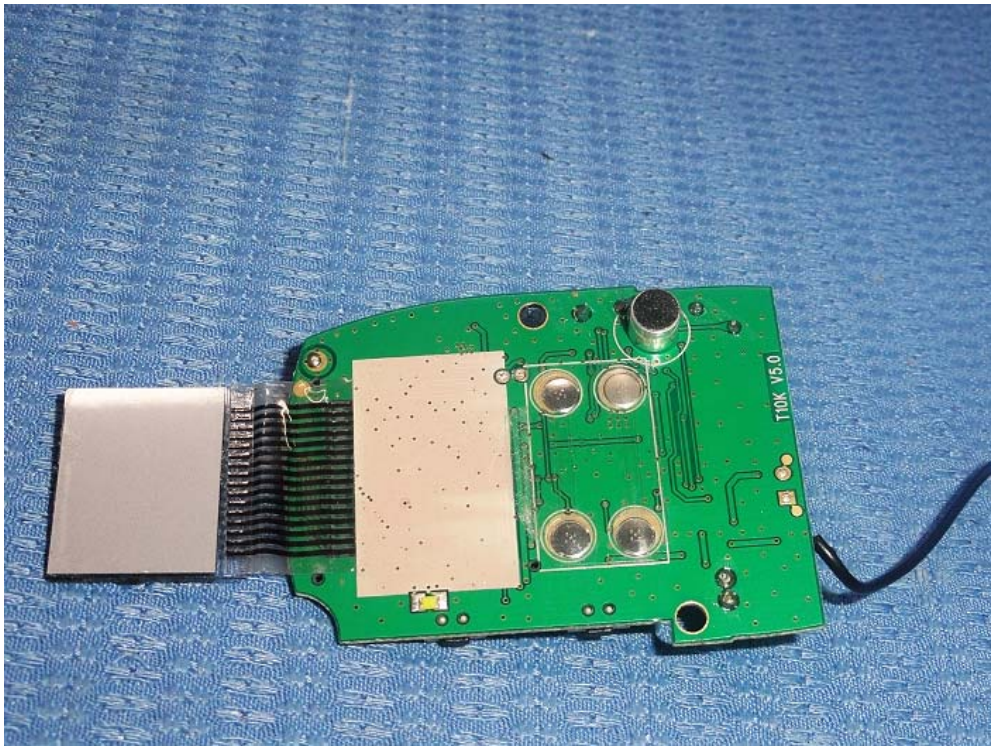

End of the report

The report refers only to the sample tested and does not apply to the bulk.
This report is issued in confidence to the client and it will be strictly treated as such by the SHENZHEN TIMEWAY TESTING LABORATORIES. It may not be reproduced rather in its entirety or in part and it may not be used for adverting. The client to whom the report is issued may, however, show or send it . or a certified copy there of prepared by the SHENZHEN TIMEWAY TESTING LABORATORIES to his customer. Supplier or others persons directly concerned. SHENZHEN TIMEWAY TESTING LABORATORIES will not, without the consent of the client enter into any discussion of correspondence with any third party concerning the contents of the report.
In the event of the improper use of the report. SHENZHEN TIMEWAY TESTING LABORATORIES reserves the rights to withdraw it and to adopt any other remedies which may be appropriate.