InSyte Product Operation Descriptions

Part I: The Product

InSyte 1 is a product designed with the intention of providing a secure measure to prevent any misuse, whether intentional or unintentional, of firearms, to deter weapon theft, and ensure security within the home.

InSyte 1 is a revolutionary solution that satisfies both the gun control and gun rights activists. It is designed to fit 95% of the firearms in the market, both historic and modern, without altering the firearm. InSyte 1 simple design and user-friendly mechanism offers a product that is within reach of any customer.

1.1. Product Physiognomy

InSyte 1 exhibits a two-piece assembly device that is composed by a main enclosure assembly (Male part) and the slide lock assembly (Female part).

1.1.1. Main Enclosure Assembly

The Main Enclosure Assembly (Male part) consists of a housing structure that holds the electronics, the batteries, the alarm (15), the universal trigger lock (17) and an adjustable tapered lock element (16) that will connect the Male part to the Female part.

1.1.2. Slide Lock Assembly

The Slide Lock Assembly (Female part) consists of a housing (18), defining sockets for receiving tapered lock (16), and a pair of pawl elements mounted in the housing for unlocking the assembly. Each one of the pawls is on opposing sides, including a latch end and a release.

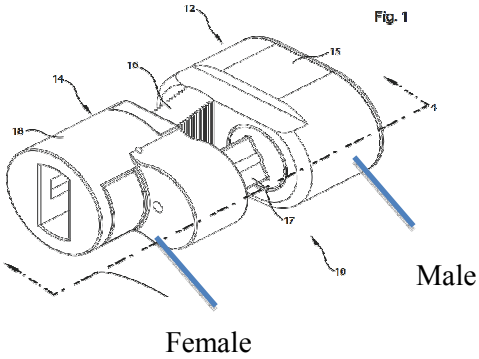

1.2. Unlocking Mechanism

The Unlocking Mechanism showcases two pawl elements, which are buttons that must be depressed simultaneously to enable the system to become unlocked. The morphology of the buttons is made in a way that a certain amount of pressure has to be applied to enable the release procedure to occur. The mechanism's ultimate purpose is to provide a childproof device that will prevent misuse of the weapon.

An elastomeric band will cover the pawl mechanism to enhance the stealth effectiveness of the unlocking system. This amplifies the same ideology as pharmaceutical locking devices for caps on prescriptions drug containers.

1.3. Power System

The device is designed to function with three (3) VDC power coin batteries that will be placed in the main Male enclosure assembly. The expected battery life is minimum one (1) year, up to 18 months, depending on number of alarms set off during that period. There will be a battery decay alarm that will indicate when the batteries need to be replaced.

1.4. Alarm System

The Alarm System is located in the Male part of the device. It is designed to alert the gun owner of an unauthorized movement of the firearm. The device will produce a distinct alarm that will sound for 10 seconds and reset after 5 seconds for an additional period of 10 seconds. The alarm system cycle will continue to sound until the weapon is settled, disarmed and/or there is no further movement of the firearm. An additional alert system is released when the device has been unlocked; producing a higher and more defined alert sound to inform the gun owner that the InSyte 1 device has

been disassembled. The alarm may be switched off by depressing, for a period of 3 seconds, the stealth Multifunction Tact Switch, located on the Male component of the device.

The motion movement alarm is triggered through the warning circuit within the device. Utilizing an Omni-directional Motion Sensor, sending a signal to an Oscillator, driving a Piezoelectric Transducer, producing a minimum of 85db @ 3.5kHz warning sound for a duration of 10 seconds, then resets.

1.5. Trigger Lock

The Trigger Lock represents a universal system that prevents the unauthorized use of a firearm. It exhibits an adjustable locking cam that extends through the trigger guard and behind the trigger. In this manner, the firearm is rendered inoperative until the InSyte 1 complete mechanism is removed by an authorized user.

This will also prevent possible accidents derived from an inappropriate handling of the firearm by an unauthorized person.

1.6. The 6-button Keypad controls

The 6-button Keypad will establish the system control, enabling the following qualities:

Six-button (Four-numeric keys) keypad design:

There are six keys on the keypad for user input. We name them as "◎", "❶", "❷", "❸", "❹", and "✔". For easier document writing, we use the following symbols "◎❶❷❸❹✔" for the keys respectively.. The meaning of each key is defines as follows:

- "◎": Command Button: This is a special button (we also call it the "wake up button"). No matter the InSyte device at what status mode, once this button is pressed, it will take the InSyte device into the Wakeup Mode.
- "❶", "❷", "❸", and "❹": Numeric keys: These keys are used to instruct the actions defined be the key sequence combinations. The following document will explain them in details.
- "✔": Control Button: This is another special button (we also call it the "confirm button"). This key is used to start an option command, or to end an action command sequence, or to confirm user key input action.

A: SPECIAL Commands:

1) "◎ ✔": "TO ARM" the devices: once this key combination is pressed, the InSyte device will be armed immediately, and a reminder message will be played.
2) "◎####◎": "TO DISARM" the devices: if the "####" is the correct password, then this InSyte device will be disarmed immediately, and a reminder message will be played. If the "####" is NOT the correct password, then device will play a reminder message and then this command is void. User can ONLY try this command 5 times with incorrect passwords.

B: GENERAL Commands:

The command key sequence "◎#✔": We have to define the actions for this InSyte command key similar to these keys on the remote control. So, here is what I think it will do. The definitions of general commands are as follows:

a) “◎❶✔”: to change password;
b) “◎❷✔”: to change the alarm sounds;
c) “◎❸✔”: to check the battery usage;
d) “◎❹✔”: to perform coupling between InSyte device and remote control

C: GENERAL Option Commands:

The option command key sequence “✔#✔”: We have to define the actions for this InSyte command key similar to these keys on the remote control. In this first version, we ONLY use it for simple options to select the sensors. Note: All Option commands are key sequence “✔#✔” followed by a “#” (numeric digit) and a “✔” to finish. So the option commands are of the key sequence form “✔#✔#✔”: The last digit “#” has different meanings with a default value.

The definitions of general option commands are as follows:

a) “✔❶✔#✔”: to activate the Sensor Options: “1” - use both the Magnetic Reed Switch and the Omni Directional Sensor; “2” - use the Magnetic Reed Switch ONLY; “3” - use the Omni Directional Sensor ONLY. The default value is “1”.
b) “✔❷✔#✔”: to activate the Sound Options: “1” – to turn Keypad sound ON; “2” – to turn Keypad sound OFF; “3” – to set the transducer volume to High level; “4” – to set the transducer volume to Low level. The default value is “1”.
c) “✔❸✔#✔”: to activate the Voice Message Language Options: “1” – to select reminder messages in English; “2” – to select reminder messages in Spanish; “3” – to set reminder messages OFF. The default value is “1”.
d) “✔❹✔#✔”: to set Sensitivity Options: There are FOUR levels of OMNI sensor sensitivities, “1” – very sensitive; “2” –above normal sensitive; “3” –moderate sensitive; “4” – low sensitive.

Here are the Commands that user will perform under normal usage:

1) Arm: “◎✔”
2) Disarm: “◎####◎”
3) Change password: “◎❶✔”
4) Change alarming sound: “◎❷✔”
5) Check battery status: “◎❸✔”
6) To couple with Remote control: “◎❹✔”
7) Select sensor option: “✔❶✔#✔”
8) Turn keypad sound on/off, or adjust transducer sound level (High/Low): “✔❷✔#✔”
9) Select voice message language: “✔❸✔#✔”
10) Set sensor’s sensitivity: 4 levels: “✔❹✔#✔”

1.7. Overall View of the InSyte 1 Device

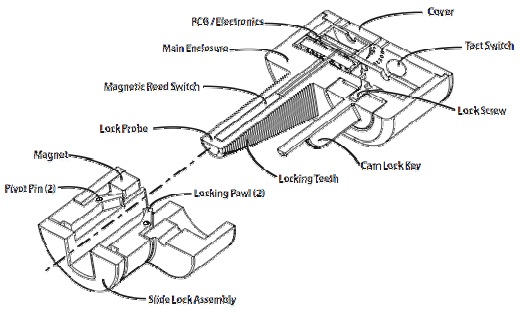

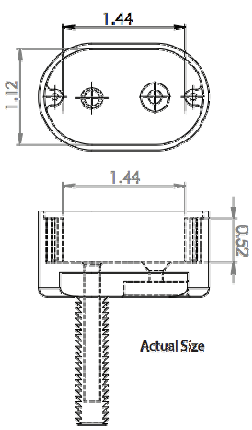

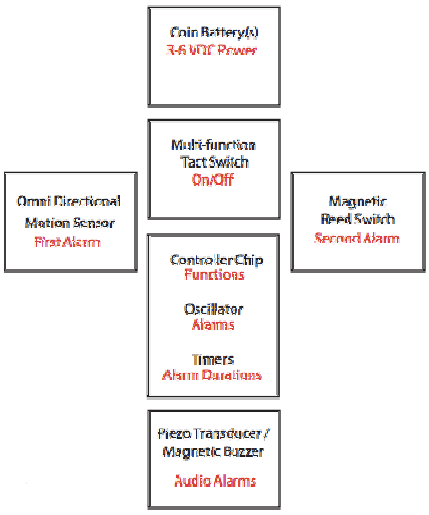

InSyte 1 Basic Operation & Functionality:

1) User interface uses “6-button Keypad” for device control:

a) Press “◎ ✔” to arm the device

b) Chirp sound indicates ready condition and battery health

c) 30 second delay timer for placement/storage prior to arming/activation

d) Press switch down momentarily for power off (within 3 seconds of handling)

Once the system has been powered on and in armed status, the warning circuit will be activated only when the unit is moved or disturbed, utilizing an Omni-directional Motion Sensor, which sends a signal to the Microchip controller, that is programmed to drive a Piezoelectric Transducer, producing a minimum of 85db @ 3.5kHz warning sound for a duration of 5 - 10 seconds, then will reset. A second and more urgent (sweep or pulsed sound) is produced if the Magnetic Reed Switch has been activated by the removal of the Slide Lock Assembly. To turn off the system, you must depress the momentary switch within 2-3 sec. after disturbing the unit.

PART II: Remote Control

The Remote Control for the InSyte devices provides a convenient way to operate the InSyte devices, especially with multiple units of InSyte devices. One remote control can manage up to 30 InSyte devices (including InSyte devices and Stealth Cameras). We use four numeric keys in remote control, the same as on InSyte device.

There are 12 keys on the keypad for user input: one Power key "⏻", four arrow keys "▲▼◀▶", and one Enter key "OK", six command control keys which we name them as "◎", "❶", "❷", "❸", "❹", and "✔". For easier document writing, we use the following symbols "◎❶❷❸❹✔" for the keys respectively. THREE more keys: "▤"[MENU], "⚙"[OPTION] and "⌫"[DELETE]. The meaning of each key is defines as follows:

- "◎": Command Button: This key is used to initiate a command sequence. This button is the same as the "◎" button on the InSyte keypad.
- "❶", "❷", "❸", and "❹": Numeric keys: These keys are used to instruct the actions defined be the key sequence combinations. The following document will explain them in details.
- "✔": Control Button: This is another special button (we also call it the "confirm button"). This key is used to end a command sequence or to confirm user key input action. This button is the same as the "✔" button on the InSyte keypad.
- "▲", "▼", "◀", and "▶": Arrow keys: These keys are used to move the selection cursor in four directions.
- "OK": Enter Button (OK butrton): This key is used to accept the cursor selection and to perform the selected command action.
- "▤": Menu Button: This key is access the Command Menu system, which will allow user to use the cursor selection and to perform the selected menu command action.
- "⚙": Option Button: This key is access the Option Menu which will allow user to use the cursor selection and to perform the selected option menu action.
- "⌫": Delete Button: This key is used to correct error when user enters wrong numeric digit.

Main Functions of the Remote Control:

- Turn ON the Remote Control
- Link an InSyte device or Stealth Camera to Remote Control
- Execute a command
- Select an option

Turn on the Remote Control device:

When the RC device is turned on, a Welcome screen will be displayed at first, maybe with date, status, and other information displayed on the OLED screen.

Every RC device comes with a factory preset password. This password is in user's personal registration card. It can be changed by user (strongly advised) immediately after user starts to use it. This is similar to InSyte device's password.
So, in the future, when user wants to change password, user must enter password to turn on RC device! This is also similar to the InSyte device.
If user entered correct password, then the RC device will be turned on and ready for user command input. If the password entered is not correct, then the OLED screen will display the following message:

Then, user can enter password again. The number “4” on the bottom-left corner indicate the number of tries left. Each incorrect password input will decrease the count by 1. We only allow user to try incorrect password 4 times. This is to prevent un-authorized person to try different password to illegally disarm the devices. If after 4 tries the password is still not correct, then the OLED screen will display the following message:

Then the RC device will be locked. This way the un-authorized person will have no other way to use the device. Then TRUE user must call InSyte company technical support with registration information and verifications to reset the password or to unlock the device.

Link an InSyte device to the Remote Control device:
The COUPLE Command in the MAIN MENU is the command to perform coupling between InSyte device and remote control, or Stealth Camera device and Remote Control device: The remote control will display the following COUPLE menu on the OLED screen:

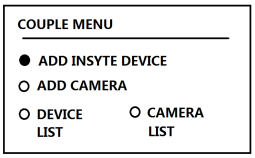

To add a new InSyte device to the remote control, select the “ADD INSYTE DEVICE” command and press “OK” button on the remote control. Then the following message will be display on the OLED screen:

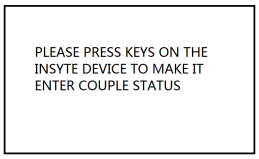

Now, please press the “4” key sequence on the InSyte device (see the InSyte Keypad general command section for details).The RC device will be coupled with this InSyte device. If this InSyte device is already coupled with it, then it will not add it in the list. If an InSyte device is NOT coupled with it, it will show that device’s ID in the list.

Command MENU System:
When the Menu button “” is pressed, the following screen will be displayed:

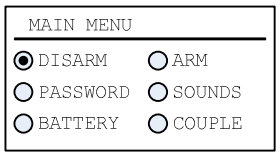

User can use the Arrow keys “” to move the cursor to different command, and use the Enter key “OK” to select that command. Then the RC device will display a command screen to the selected menu command.

A: SPECIAL Commands:

DISARM and ARM Commands – These two commands are the most used commands. Use ARM command to arm all InSyte devices that linked to this remote control. Use DISARM command to disarm all InSyte devices that linked to this remote control. Since the password is required to turn on the remote control, so that the DISARM command on the remote control DOES NOT require the password anymore.

PASSWORD Command – to change password: User uses the numeric keys to enter password codes. The digits will be displayed, and users can use the Delete key "⌫" to correct error input. Press Enter key "OK" to accept the input codes.

B: GENERAL Commands:

There are other general commands are as follows:

a) "SOUND": to change password;
b) "BATTERY": to check the battery usage;
c) "COUPLE": to link between InSyte device and remote control.

C: GENERAL Option Commands:

When the Option button "⚙" is pressed, the following screen will be displayed:

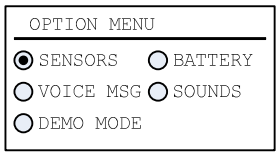

Here are the general option commands:

a) "SENSORS": to sensor option;
b) "SOUNDS": to turn keypad sound on/off, or adjust transducer sound level (High/Low);
c) "VOICE MSG": to select voice message language.
d) "SENSITIVITY": to set sensor's sensitivity: 4 levels.

PART III: Stealth Camera

The Stealth Camera for the InSyte devices provides the ability to capture still and video images of what's happening around the InSyte devices when the InSyte alarm goes off. The Stealth Camera is linked with the Remote Control via Bluetooth technology – the same way as the InSyte devices are linked to the remote control.

Link a Stealth Camera device to the Remote Control device:

Use the COUPLE Command of the Remote Control device in the MAIN MENU to perform coupling between Stealth Camera device and Remote Control device. In the COUPLE menu, please select the "ADD CAMERA" command and press "OK" button on the remote control. Then a message will be display on the OLED screen to invite you to press button on the camera for device coupling.

Now, please press the "COUPLE" button on the Camera. Then RC device will be coupled with this Camera.

Once a stealth camera is linked with a remote control, any of the InSyte devices that are linked to the same remote control has detected motion movement or magnetic switch goes off, then the stealth camera will start to take still pictures as well as to record video images for 2 minutes.

PART IV: EXAMPLE – Step-by-step actions:

The following is an example of common actions using InSyte device with Remote Control and Stealth Camera. This procedure could be used to test the InSyte complete package of products. Before doing this, please make sure you have the following devices on hands.

Step 1: To Turn on the Remote Control

When you turn on the Remote Control, a message box will be displayed and prompt you to enter password. Please enter the default password "1111", and then press "OK" button. This will bring you into the activated remote control. The default screen MAIN MENU will be displayed.

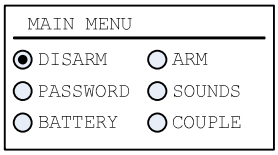

Step 2: To Add InSyte devices

Use the arrow keys "▲▼◀▶" to scroll to the "COUPLE" Command of the Remote Control device in the MAIN MENU and press "OK" button to perform coupling between InSyte device and Remote Control device. Then the COUPLE MENU will be displayed:

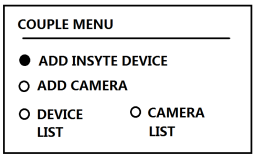

Then, select the "ADD INSYTE DEVICE" command and press "OK" button on the remote control. Then the following message will be display on the OLED screen:

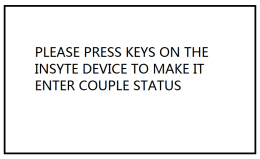

Now, please press the "◎4✓" key sequence on the InSyte device. Then, you will see the InSyte device ID

shown in the device list on the remote control OLED screen.

Step 3: To Add Camera

Use the COUPLE Command of the Remote Control device in the MAIN MENU to perform coupling between Stealth Camera device and Remote Control device. (This is similar to the above step; you just need to press the "COUPLE" button on the Camera. Then RC device will be coupled with this Camera.)

Step 4: To Arm InSyte Device

There are two ways to arm the InSyte device. One way is to use ARM command of the Remote Control device in the MAIN MENU to arm all InSyte devices that linked to this remote control. To do so, please move the cursor to the ARM command and press "OK" button. The other way is to press the "◎✓" key sequence on the InSyte device (single device only). Then, the InSyte RED light on the InSyte device will flash. During this time, please place the InSyte device on a stable surface such as on a table or in a drawer. This light will go off after for two seconds, it indicates that the InSyte device is armed.

Step 5: To Test the motion

Now, please try to move the InSyte device and wait for the alarm to go off. Once the InSyte alarm goes off, a loud transducer sound with more than 85dB will sound continuously until user stop it. (Please see the next step.) At the same time, if the remote control is linked with a stealth camera, then the stealth camera will start to take still pictures as well as to record video images for 2 minutes.

Step 6: To Disarm InSyte device

There are two ways to disarm the InSyte device. One way is to use DISARM command to disarm all InSyte devices that linked to this remote control. To do so, please move the cursor to the DISARM command and press "OK" button. The other war is to use the keypad on the InSyte device to disarm that InSyte device (single device only). To do so, press the key sequence of "◎####◎", where "####" is the password digits. If the correct password is entered, then this InSyte device will be disarmed immediately, and a reminder message will be played.

FCC Statement

This equipment has been tested and found to comply with the limits for a Class B digital device, pursuant to Part 15 of the FCC Rules. These limits are designed to provide reasonable protection against harmful interference in a residential installation. This equipment generates uses and can radiate radio frequency energy and, if not installed and used in accordance with the instructions, may cause harmful interference to radio communications. However, there is no guarantee that interference will not occur in a particular installation. If this equipment does cause harmful interference to radio or television reception, which can be determined by turning the equipment off and on, the user is encouraged to try to correct the interference by one or more of the following measures:

-- Reorient or relocate the receiving antenna.

-- Increase the separation between the equipment and receiver.

-- Connect the equipment into an outlet on a circuit different from that to which the receiver is connected.

-- Consult the dealer or an experienced radio/TV technician for help.

This device complies with part 15 of the FCC Rules. Operation is subject to the following two conditions:(1) This device may not cause harmful interference, and (2) this device must accept any interference received, including interference that may cause undesired operation.

Changes or modifications not expressly approved by the party responsible for compliance could void the user's authority to operate the equipment.