FCC SAR Test Report

Report No.	:	**SA150722C10A**
Applicant	:	**Poynt Co.**
Address	:	**490 S California Avenue Suite 200 Palo Alto, CA 94306 USA**
Product	:	**POS**
FCC ID	:	**2AFD7-P3302**
Brand	:	**POYNT**
Model No.	:	**P3302**
Standards	:	**FCC 47 CFR Part 2 (2.1093) / IEEE C95.1:1992 / IEEE Std 1528:2013** **KDB 865664 D01 v01r04 / KDB 865664 D02 v01r01** **KDB 248227 D01 v02r01 / KDB 447498 D01 v05r02 / KDB 941225 D01 v03**
Sample Received Date	:	**Jul. 22, 2015**
Date of Testing	:	**Aug. 15, 2015 ~ Sep. 24, 2015**

CERTIFICATION: The above equipment have been tested by **Bureau Veritas Consumer Products Services (H.K.) Ltd., Taoyuan Branch – Lin Kou Laboratories**, and found compliance with the requirement of the above standards. The test record, data evaluation & Equipment Under Test (EUT) configurations represented herein are true and accurate accounts of the measurements of the sample's SAR characteristics under the conditions specified in this report. It should not be reproduced except in full, without the written approval of our laboratory. The client should not use it to claim product certification, approval, or endorsement by TAF or any government agencies.

Prepared By : _____
Ivonne Wu / Supervisor

Approved By : _____
Gordon Lin / Assistant Manager

This report is for your exclusive use. Any copying or replication of this report to or for any other person or entity, or use of our name or trademark, is permitted only with our prior written permission. This report sets forth our findings solely with respect to the test samples identified herein. The results set forth in this report are not indicative or representative of the quality or characteristics of the lot from which a test sample was taken or any similar or identical product unless specifically and expressly noted. Our report includes all of the tests requested by you and the results thereof based upon the information that you provided to us. You have 60 days from date of issuance of this report to notify us of any material error or omission caused by our negligence, provided, however, that such notice shall be in writing and shall specifically address the issue you wish to raise. A failure to raise such issue within the prescribed time shall constitute your unqualified acceptance of the completeness of this report, the tests conducted and the correctness of the report contents. Unless specific mention, the uncertainty of measurement has been explicitly taken into account to declare the compliance or non-compliance to the specification.

Table of Contents

Release Control Record **3**
1. Summary of Maximum SAR Value **4**
2. Description of Equipment Under Test **5**
3. SAR Measurement System **6**
3.1 Definition of Specific Absorption Rate (SAR) 6
3.2 SPEAG DASY System 6
3.2.1 Robot 7
3.2.2 Probes 8
3.2.3 Data Acquisition Electronics (DAE) 8
3.2.4 Phantoms 9
3.2.5 Device Holder 10
3.2.6 System Validation Dipoles 10
3.2.7 Tissue Simulating Liquids 11
3.3 SAR System Verification 14
3.4 SAR Measurement Procedure 15
3.4.1 Area & Zoom Scan Procedure 15
3.4.2 Volume Scan Procedure 15
3.4.3 Power Drift Monitoring 16
3.4.4 Spatial Peak SAR Evaluation 16
3.4.5 SAR Averaged Methods 16
4. SAR Measurement Evaluation **17**
4.1 EUT Configuration and Setting 17
4.2 EUT Testing Position 22
4.2.1 SAR Test Exclusion Evaluations 22
4.2.2 Simultaneous Transmission Possibilities 24
4.3 Tissue Verification 24
4.4 System Validation 25
4.5 System Verification 25
4.6 Maximum Output Power 26
4.6.1 Maximum Conducted Power 26
4.6.2 Measured Conducted Power Result 27
4.7 SAR Testing Results 30
4.7.1 SAR Test Reduction Considerations 30
4.7.2 SAR Results for Body Exposure Condition 31
4.7.3 SAR Measurement Variability 32
4.7.4 Simultaneous Multi-band Transmission Evaluation 33
5. Calibration of Test Equipment **37**
6. Measurement Uncertainty **38**
7. Information on the Testing Laboratories **40**

Appendix A. SAR Plots of System Verification
Appendix B. SAR Plots of SAR Measurement
Appendix C. Calibration Certificate for Probe and Dipole
Appendix D. Photographs of EUT and Setup

Release Control Record

Report No.	Reason for Change	Date Issued
SA150722C10A	Initial release	Oct. 07, 2015

1. Summary of Maximum SAR Value

Equipment Class	Mode	Highest Reported Body SAR_{1g} (W/kg)
PCB	GSM850	1.01
	GSM1900	0.33
	WCDMA II	1.00
	WCDMA V	0.45
DTS	2.4G WLAN	0.79
NII	5.2G WLAN	N/A
	5.3G WLAN	0.55
	5.6G WLAN	0.71
	5.8G WLAN	0.49
DSS	Bluetooth	N/A
DXX	NFC	N/A
Highest Simultaneous Transmission SAR		**Body (W/kg)**
PCB + DTS		1.41
PCB + NII		1.41
PCB + DSS		1.12

Note:

1. The SAR limit **(Head & Body: SAR_{1g} 1.6 W/kg, Extremity: SAR_{10g} 4.0 W/kg)** for general population / uncontrolled exposure is specified in FCC 47 CFR part 2 (2.1093) and ANSI/IEEE C95.1-1992.

2. Description of Equipment Under Test

EUT Type	POS
FCC ID	2AFD7-P3302
Brand Name	POYNT
Model Name	P3302
Tx Frequency Bands (Unit: MHz)	GSM850 : 824.2 ~ 848.8 GSM1900 : 1850.2 ~ 1909.8 WCDMA Band II : 1852.4 ~ 1907.6 WCDMA Band V : 826.4 ~ 846.6 WLAN : 2412 ~ 2462, 5180 ~ 5240, 5260 ~ 5320, 5500 ~ 5700, 5745 ~ 5825 Bluetooth : 2402 ~ 2480 NFC : 13.56
Uplink Modulations	GSM & GPRS : GMSK EDGE : 8PSK WCDMA : QPSK 802.11b : DSSS 802.11a/g/n : OFDM Bluetooth : GFSK, π/4-DQPSK, 8-DPSK NFC : ASK
Maximum Tune-up Conducted Power (Unit: dBm)	GSM850 : 32.0 GSM1900 : 30.0 WCDMA Band II : 24.0 WCDMA Band V : 23.5 WLAN 2.4G : 13.5 WLAN 5.2G : 9.0 WLAN 5.3G : 9.0 WLAN 5.6G : 9.5 WLAN 5.8G : 9.5 Bluetooth : 3.5
Antenna Type	Fixed Internal Antenna
EUT Stage	Production Unit

Note:

1. The above EUT information is declared by manufacturer and for more detailed features description please refers to the manufacturer's specifications or User's Manual.

List of Accessory:

Battery	**Brand Name**	Formosa Electronic Industries IN
	Model Name	P61
	Power Rating	3.7Vdc, 14.8Wh
	Type	Li-ion

3. SAR Measurement System

3.1 Definition of Specific Absorption Rate (SAR)

SAR is related to the rate at which energy is absorbed per unit mass in an object exposed to a radio field. The SAR distribution in a biological body is complicated and is usually carried out by experimental techniques or numerical modeling. The standard recommends limits for two tiers of groups, occupational/controlled and general population/uncontrolled, based on a person's awareness and ability to exercise control over his or her exposure. In general, occupational/controlled exposure limits are higher than the limits for general population/uncontrolled.

The SAR definition is the time derivative (rate) of the incremental energy (dW) absorbed by (dissipated in) an incremental mass (dm) contained in a volume element (dv) of a given density (ρ). The equation description is as below:

$$\mathbf{SAR} = \frac{\mathbf{d}}{\mathbf{dt}}\left(\frac{\mathbf{dW}}{\mathbf{dm}}\right) = \frac{\mathbf{d}}{\mathbf{dt}}\left(\frac{\mathbf{dW}}{\boldsymbol{\rho}\mathbf{dv}}\right)$$

SAR is expressed in units of Watts per kilogram (W/kg)

SAR measurement can be related to the electrical field in the tissue by

$$\mathbf{SAR} = \frac{\boldsymbol{\sigma}|\mathbf{E}|^2}{\boldsymbol{\rho}}$$

Where: σ is the conductivity of the tissue, ρ is the mass density of the tissue and E is the RMS electrical field strength.

3.2 SPEAG DASY System

DASY system consists of high precision robot, probe alignment sensor, phantom, robot controller, controlled measurement server and near-field probe. The robot includes six axes that can move to the precision position of the DASY4/5 software defined. The DASY software can define the area that is detected by the probe. The robot is connected to controlled box. Controlled measurement server is connected to the controlled robot box. The DAE includes amplifier, signal multiplexing, AD converter, offset measurement and surface detection. It is connected to the Electro-optical coupler (ECO). The ECO performs the conversion form the optical into digital electric signal of the DAE and transfers data to the PC.

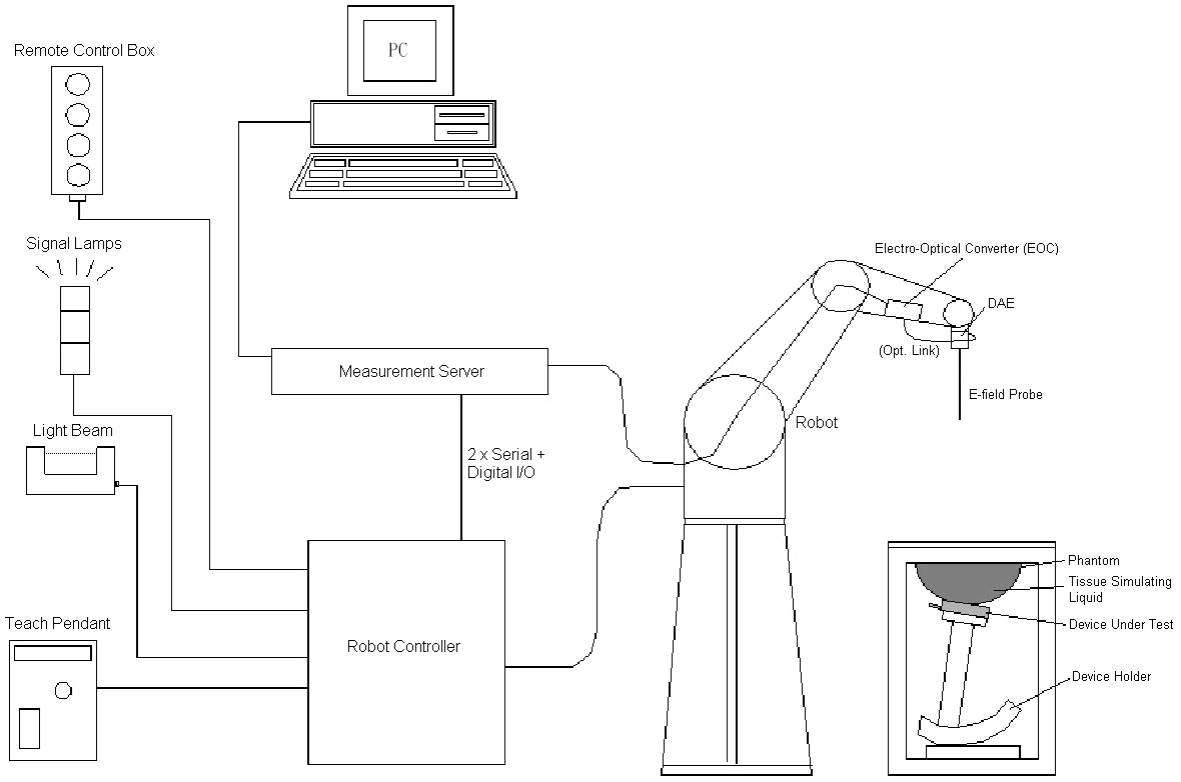

Fig-3.1 DASY System Setup

3.2.1 Robot

The DASY system uses the high precision robots from Stäubli SA (France). For the 6-axis controller system, the robot controller version (DASY4: CS7MB; DASY5: CS8c) from Stäubli is used. The Stäubli robot series have many features that are important for our application:

- High precision (repeatability ±0.035 mm)
- High reliability (industrial design)
- Jerk-free straight movements
- Low ELF interference (the closed metallic construction shields against motor control fields)

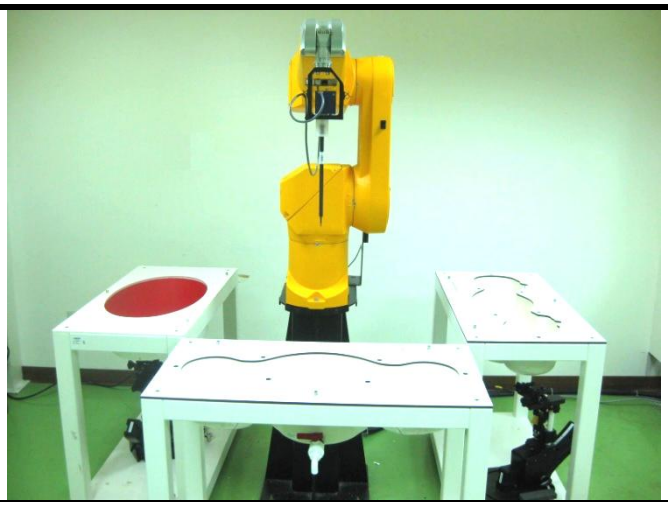

Fig-3.2 DASY4

Fig-3.3 DASY5

3.2.2 Probes

The SAR measurement is conducted with the dosimetric probe. The probe is specially designed and calibrated for use in liquid with high permittivity. The dosimetric probe has special calibration in liquid at different frequency.

Model	EX3DV4	
Construction	Symmetrical design with triangular core. Built-in shielding against static charges. PEEK enclosure material (resistant to organic solvents, e.g., DGBE).	
Frequency	10 MHz to 6 GHz Linearity: ± 0.2 dB	
Directivity	± 0.3 dB in HSL (rotation around probe axis) ± 0.5 dB in tissue material (rotation normal to probe axis)	
Dynamic Range	10 µW/g to 100 mW/g Linearity: ± 0.2 dB (noise: typically < 1 µW/g)	
Dimensions	Overall length: 337 mm (Tip: 20 mm) Tip diameter: 2.5 mm (Body: 12 mm) Typical distance from probe tip to dipole centers: 1 mm	

Model	ES3DV3	
Construction	Symmetrical design with triangular core. Interleaved sensors. Built-in shielding against static charges. PEEK enclosure material (resistant to organic solvents, e.g., DGBE).	
Frequency	10 MHz to 4 GHz Linearity: ± 0.2 dB	
Directivity	± 0.2 dB in HSL (rotation around probe axis) ± 0.3 dB in tissue material (rotation normal to probe axis)	
Dynamic Range	5 µW/g to 100 mW/g Linearity: ± 0.2 dB	
Dimensions	Overall length: 337 mm (Tip: 20 mm) Tip diameter: 3.9 mm (Body: 12 mm) Distance from probe tip to dipole centers: 2.0 mm	

3.2.3 Data Acquisition Electronics (DAE)

Model	DAE3, DAE4	
Construction	Signal amplifier, multiplexer, A/D converter and control logic. Serial optical link for communication with DASY embedded system (fully remote controlled). Two step probe touch detector for mechanical surface detection and emergency robot stop.	
Measurement Range	-100 to +300 mV (16 bit resolution and two range settings: 4mV, 400mV)	
Input Offset Voltage	< 5µV (with auto zero)	
Input Bias Current	< 50 fA	
Dimensions	60 x 60 x 68 mm	

3.2.4 Phantoms

Model	Twin SAM	
Construction	The shell corresponds to the specifications of the Specific Anthropomorphic Mannequin (SAM) phantom defined in IEEE 1528 and IEC 62209-1. It enables the dosimetric evaluation of left and right hand phone usage as well as body mounted usage at the flat phantom region. A cover prevents evaporation of the liquid. Reference markings on the phantom allow the complete setup of all predefined phantom positions and measurement grids by teaching three points with the robot.	
Material	Vinylester, glass fiber reinforced (VE-GF)	
Shell Thickness	2 ± 0.2 mm (6 ± 0.2 mm at ear point)	
Dimensions	Length: 1000 mm Width: 500 mm Height: adjustable feet	
Filling Volume	approx. 25 liters	

Model	ELI	
Construction	Phantom for compliance testing of handheld and body-mounted wireless devices in the frequency range of 30 MHz to 6 GHz. ELI is fully compatible with the IEC 62209-2 standard and all known tissue simulating liquids. ELI has been optimized regarding its performance and can be integrated into our standard phantom tables. A cover prevents evaporation of the liquid. Reference markings on the phantom allow installation of the complete setup, including all predefined phantom positions and measurement grids, by teaching three points. The phantom is compatible with all SPEAG dosimetric probes and dipoles.	
Material	Vinylester, glass fiber reinforced (VE-GF)	
Shell Thickness	2.0 ± 0.2 mm (bottom plate)	
Dimensions	Major axis: 600 mm Minor axis: 400 mm	
Filling Volume	approx. 30 liters	

3.2.5 Device Holder

Model	Mounting Device	
Construction	In combination with the Twin SAM Phantom or ELI4, the Mounting Device enables the rotation of the mounted transmitter device in spherical coordinates. Rotation point is the ear opening point. Transmitter devices can be easily and accurately positioned according to IEC, IEEE, FCC or other specifications. The device holder can be locked for positioning at different phantom sections (left head, right head, flat).	
Material	POM	

Model	Laptop Extensions Kit	
Construction	Simple but effective and easy-to-use extension for Mounting Device that facilitates the testing of larger devices according to IEC 62209-2 (e.g., laptops, cameras, etc.). It is lightweight and fits easily on the upper part of the Mounting Device in place of the phone positioner.	
Material	POM, Acrylic glass, Foam	

3.2.6 System Validation Dipoles

Model	D-Serial	
Construction	Symmetrical dipole with l/4 balun. Enables measurement of feed point impedance with NWA. Matched for use near flat phantoms filled with tissue simulating solutions.	
Frequency	750 MHz to 5800 MHz	
Return Loss	> 20 dB	
Power Capability	> 100 W (f < 1GHz), > 40 W (f > 1GHz)	

3.2.7 Tissue Simulating Liquids

For SAR measurement of the field distribution inside the phantom, the phantom must be filled with homogeneous tissue simulating liquid to a depth of at least 15 cm. For head SAR testing, the liquid height from the ear reference point (ERP) of the phantom to the liquid top surface is larger than 15 cm. For body SAR testing, the liquid height from the center of the flat phantom to the liquid top surface is larger than 15 cm. The nominal dielectric values of the tissue simulating liquids in the phantom and the tolerance of 5% are listed in Table-3.1.

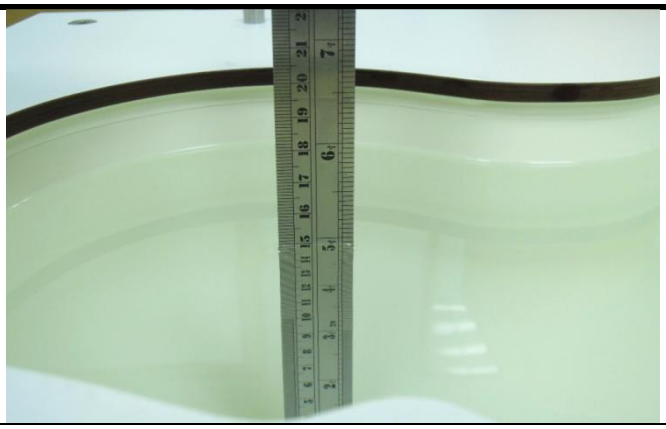	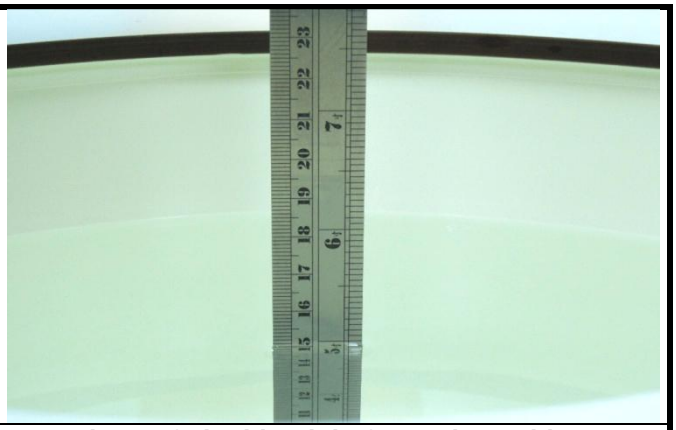
Photo of Liquid Height for Head Position	**Photo of Liquid Height for Body Position**

The dielectric properties of the head tissue simulating liquids are defined in IEEE 1528, and KDB 865664 D01 Appendix A. For the body tissue simulating liquids, the dielectric properties are defined in KDB 865664 D01 Appendix A. The dielectric properties of the tissue simulating liquids were verified prior to the SAR evaluation using a dielectric assessment kit and a network analyzer.

Table-3.1 Targets of Tissue Simulating Liquid

Frequency (MHz)	Target Permittivity	Range of ±5%	Target Conductivity	Range of ±5%
For Head				
750	41.9	39.8 ~ 44.0	0.89	0.85 ~ 0.93
835	41.5	39.4 ~ 43.6	0.90	0.86 ~ 0.95
900	41.5	39.4 ~ 43.6	0.97	0.92 ~ 1.02
1450	40.5	38.5 ~ 42.5	1.20	1.14 ~ 1.26
1640	40.3	38.3 ~ 42.3	1.29	1.23 ~ 1.35
1750	40.1	38.1 ~ 42.1	1.37	1.30 ~ 1.44
1800	40.0	38.0 ~ 42.0	1.40	1.33 ~ 1.47
1900	40.0	38.0 ~ 42.0	1.40	1.33 ~ 1.47
2000	40.0	38.0 ~ 42.0	1.40	1.33 ~ 1.47
2300	39.5	37.5 ~ 41.5	1.67	1.59 ~ 1.75
2450	39.2	37.2 ~ 41.2	1.80	1.71 ~ 1.89
2600	39.0	37.1 ~ 41.0	1.96	1.86 ~ 2.06
3500	37.9	36.0 ~ 39.8	2.91	2.76 ~ 3.06
5200	36.0	34.2 ~ 37.8	4.66	4.43 ~ 4.89
5300	35.9	34.1 ~ 37.7	4.76	4.52 ~ 5.00
5500	35.6	33.8 ~ 37.4	4.96	4.71 ~ 5.21
5600	35.5	33.7 ~ 37.3	5.07	4.82 ~ 5.32
5800	35.3	33.5 ~ 37.1	5.27	5.01 ~ 5.53
For Body				
750	55.5	52.7 ~ 58.3	0.96	0.91 ~ 1.01
835	55.2	52.4 ~ 58.0	0.97	0.92 ~ 1.02
900	55.0	52.3 ~ 57.8	1.05	1.00 ~ 1.10
1450	54.0	51.3 ~ 56.7	1.30	1.24 ~ 1.37
1640	53.8	51.1 ~ 56.5	1.40	1.33 ~ 1.47
1750	53.4	50.7 ~ 56.1	1.49	1.42 ~ 1.56
1800	53.3	50.6 ~ 56.0	1.52	1.44 ~ 1.60
1900	53.3	50.6 ~ 56.0	1.52	1.44 ~ 1.60
2000	53.3	50.6 ~ 56.0	1.52	1.44 ~ 1.60
2300	52.9	50.3 ~ 55.5	1.81	1.72 ~ 1.90
2450	52.7	50.1 ~ 55.3	1.95	1.85 ~ 2.05
2600	52.5	49.9 ~ 55.1	2.16	2.05 ~ 2.27
3500	51.3	48.7 ~ 53.9	3.31	3.14 ~ 3.48
5200	49.0	46.6 ~ 51.5	5.30	5.04 ~ 5.57
5300	48.9	46.5 ~ 51.3	5.42	5.15 ~ 5.69
5500	48.6	46.2 ~ 51.0	5.65	5.37 ~ 5.93
5600	48.5	46.1 ~ 50.9	5.77	5.48 ~ 6.06
5800	48.2	45.8 ~ 50.6	6.00	5.70 ~ 6.30

The following table gives the recipes for tissue simulating liquids.

Table-3.2 Recipes of Tissue Simulating Liquid

Tissue Type	Bactericide	DGBE	HEC	NaCl	Sucrose	Triton X-100	Water	Diethylene Glycol Mono-hexylether
H750	0.2	-	0.2	1.5	56.0	-	42.1	-
H835	0.2	-	0.2	1.5	57.0	-	41.1	-
H900	0.2	-	0.2	1.4	58.0	-	40.2	-
H1450	-	43.3	-	0.6	-	-	56.1	-
H1640	-	45.8	-	0.5	-	-	53.7	-
H1750	-	47.0	-	0.4	-	-	52.6	-
H1800	-	44.5	-	0.3	-	-	55.2	-
H1900	-	44.5	-	0.2	-	-	55.3	-
H2000	-	44.5	-	0.1	-	-	55.4	-
H2300	-	44.9	-	0.1	-	-	55.0	-
H2450	-	45.0	-	0.1	-	-	54.9	-
H2600	-	45.1	-	0.1	-	-	54.8	-
H3500	-	8.0	-	0.2	-	20.0	71.8	-
H5G	-	-	-	-	-	17.2	65.5	17.3
B750	0.2	-	0.2	0.8	48.8	-	50.0	-
B835	0.2	-	0.2	0.9	48.5	-	50.2	-
B900	0.2	-	0.2	0.9	48.2	-	50.5	-
B1450	-	34.0	-	0.3	-	-	65.7	-
B1640	-	32.5	-	0.3	-	-	67.2	-
B1750	-	31.0	-	0.2	-	-	68.8	-
B1800	-	29.5	-	0.4	-	-	70.1	-
B1900	-	29.5	-	0.3	-	-	70.2	-
B2000	-	30.0	-	0.2	-	-	69.8	-
B2300	-	31.0	-	0.1	-	-	68.9	-
B2450	-	31.4	-	0.1	-	-	68.5	-
B2600	-	31.8	-	0.1	-	-	68.1	-
B3500	-	28.8	-	0.1	-	-	71.1	-
B5G	-	-	-	-	-	10.7	78.6	10.7

3.3 SAR System Verification

The system check verifies that the system operates within its specifications. It is performed daily or before every SAR measurement. The system check uses normal SAR measurements in the flat section of the phantom with a matched dipole at a specified distance. The system verification setup is shown as below.

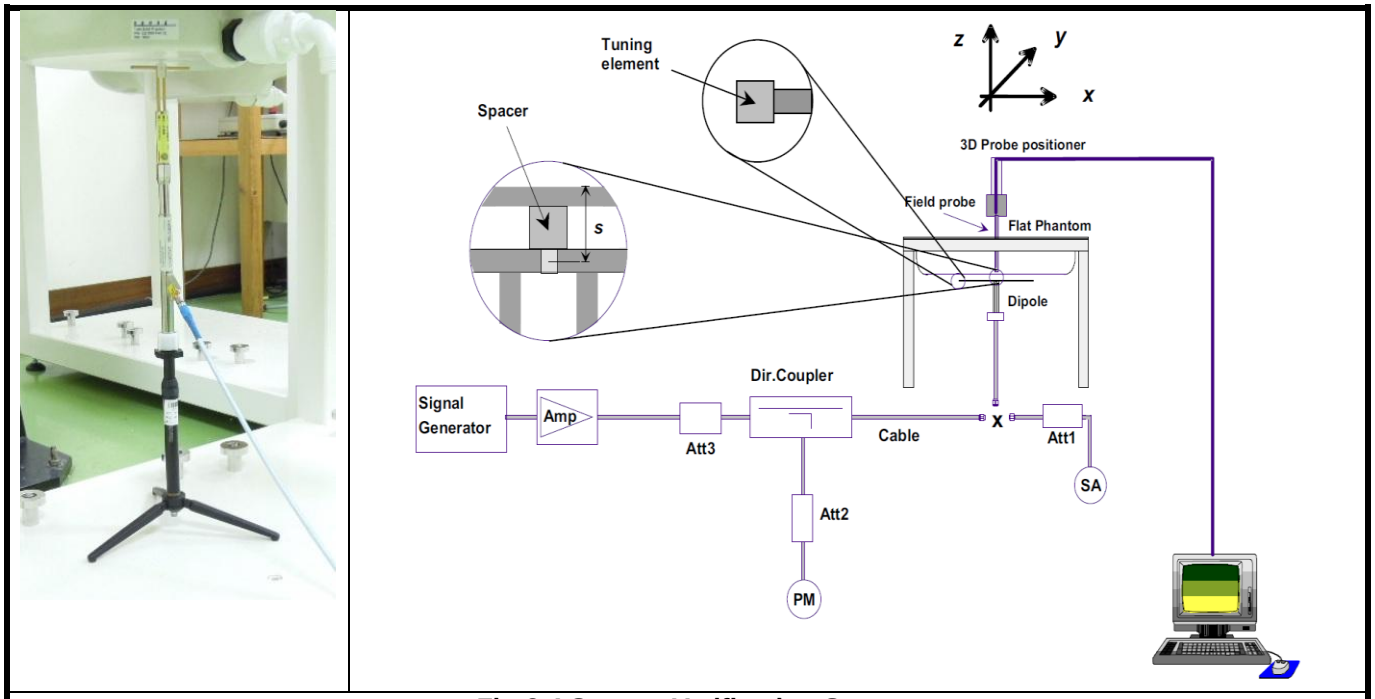

Fig-3.4 System Verification Setup

The validation dipole is placed beneath the flat phantom with the specific spacer in place. The distance spacer is touch the phantom surface with a light pressure at the reference marking and be oriented parallel to the long side of the phantom. The spectrum analyzer measures the forward power at the location of the system check dipole connector. The signal generator is adjusted for the desired forward power (250 mW is used for 700 MHz to 3 GHz, 100 mW is used for 3.5 GHz to 6 GHz) at the dipole connector and the power meter is read at that level. After connecting the cable to the dipole, the signal generator is readjusted for the same reading at power meter.

After system check testing, the SAR result will be normalized to 1W forward input power and compared with the reference SAR value derived from validation dipole certificate report. The deviation of system check should be within 10 %.

3.4 SAR Measurement Procedure

According to the SAR test standard, the recommended procedure for assessing the peak spatial-average SAR value consists of the following steps:

(a) Power reference measurement
(b) Area scan
(c) Zoom scan
(d) Power drift measurement

The SAR measurement procedures for each of test conditions are as follows:

(a) Make EUT to transmit maximum output power
(b) Measure conducted output power through RF cable
(c) Place the EUT in the specific position of phantom
(d) Perform SAR testing steps on the DASY system
(e) Record the SAR value

3.4.1 Area & Zoom Scan Procedure

First Area Scan is used to locate the approximate location(s) of the local peak SAR value(s). The measurement grid within an Area Scan is defined by the grid extent, grid step size and grid offset. Next, in order to determine the EM field distribution in a three-dimensional spatial extension, Zoom Scan is required. The Zoom Scan is performed around the highest E-field value to determine the averaged SAR-distribution over 10 g. According to KDB 865664 D01, the resolution for Area and Zoom scan is specified in the table below.

Items	<= 2 GHz	2-3 GHz	3-4 GHz	4-5 GHz	5-6 GHz
Area Scan (Δx, Δy)	<= 15 mm	<= 12 mm	<= 12 mm	<= 10 mm	<= 10 mm
Zoom Scan (Δx, Δy)	<= 8 mm	<= 5 mm	<= 5 mm	<= 4 mm	<= 4 mm
Zoom Scan (Δz)	<= 5 mm	<= 5 mm	<= 4 mm	<= 3 mm	<= 2 mm
Zoom Scan Volume	>= 30 mm	>= 30 mm	>= 28 mm	>= 25 mm	>= 22 mm

Note:

When zoom scan is required and report SAR is <= 1.4 W/kg, the zoom scan resolution of Δx / Δy (2-3GHz: <= 8 mm, 3-4GHz: <= 7 mm, 4-6GHz: <= 5 mm) may be applied.

3.4.2 Volume Scan Procedure

The volume scan is used for assess overlapping SAR distributions for antennas transmitting in different frequency bands. It is equivalent to an oversized zoom scan used in standalone measurements. The measurement volume will be used to enclose all the simultaneous transmitting antennas. For antennas transmitting simultaneously in different frequency bands, the volume scan is measured separately in each frequency band. In order to sum correctly to compute the 1g aggregate SAR, the EUT remain in the same test position for all measurements and all volume scan use the same spatial resolution and grid spacing. When all volume scan were completed, the software, SEMCAD postprocessor can combine and subsequently superpose these measurement data to calculating the multiband SAR.

3.4.3 Power Drift Monitoring

All SAR testing is under the EUT install full charged battery and transmit maximum output power. In DASY measurement software, the power reference measurement and power drift measurement procedures are used for monitoring the power drift of EUT during SAR test. Both these procedures measure the field at a specified reference position before and after the SAR testing. The software will calculate the field difference in dB. If the power drift more than 5%, the SAR will be retested.

3.4.4 Spatial Peak SAR Evaluation

The procedure for spatial peak SAR evaluation has been implemented according to the test standard. It can be conducted for 1g and 10g, as well as for user-specific masses. The DASY software includes all numerical procedures necessary to evaluate the spatial peak SAR value.

The base for the evaluation is a "cube" measurement. The measured volume must include the 1g and 10g cubes with the highest averaged SAR values. For that purpose, the center of the measured volume is aligned to the interpolated peak SAR value of a previously performed area scan.

The entire evaluation of the spatial peak values is performed within the post-processing engine (SEMCAD). The system always gives the maximum values for the 1g and 10g cubes. The algorithm to find the cube with highest averaged SAR is divided into the following stages:

(a) Extraction of the measured data (grid and values) from the Zoom Scan
(b) Calculation of the SAR value at every measurement point based on all stored data (A/D values and measurement parameters)
(c) Generation of a high-resolution mesh within the measured volume
(d) Interpolation of all measured values form the measurement grid to the high-resolution grid
(e) Extrapolation of the entire 3-D field distribution to the phantom surface over the distance from sensor to surface
(f) Calculation of the averaged SAR within masses of 1g and 10g

3.4.5 SAR Averaged Methods

In DASY, the interpolation and extrapolation are both based on the modified Quadratic Shepard’s method. The interpolation scheme combines a least-square fitted function method and a weighted average method which are the two basic types of computational interpolation and approximation.

Extrapolation routines are used to obtain SAR values between the lowest measurement points and the inner phantom surface. The extrapolation distance is determined by the surface detection distance and the probe sensor offset. The uncertainty increases with the extrapolation distance. To keep the uncertainty within 1% for the 1 g and 10 g cubes, the extrapolation distance should not be larger than 5 mm.

4. SAR Measurement Evaluation

4.1 EUT Configuration and Setting

<Considerations Related to Proximity Sensor>

The device supports WWAN, WLAN, and Bluetooth capabilities. It is designed with a proximity sensor which can trigger/not trigger power reduction for GSM1900 and WCDMA on Rear Face and Bottom Side of EUT for SAR compliance. Others RF capability (GSM850, WLAN and Bluetooth) have no power reduction. The power levels for all wireless technologies and the power reduction please refer to section 4.6 of this report.

Proximity Sensor Triggering Distances (KDB 616217 D04 §6.2)

The proximity sensor triggering distance was determined per KDB 616217 for rear face and applicable edge. Summary for power verification per distance was tabulated in the below table.

Output Power Verification in dBm for EUT Rear Face											
Distance (mm)	10	11	12	13	14	15	16	17	18	19	20
GSM1900, GPRS 1Tx	20.8	20.5	20.6	20.6	20.6	20.6	29.6	29.8	29.7	30.0	30.0
GSM1900, GPRS 2Tx	17.6	18.0	17.7	18.0	18.0	17.8	26.7	26.9	27.0	27.0	27.0
GSM1900, GPRS 3Tx	16.2	16.2	16.1	16.2	16.2	16.2	25.3	25.1	25.1	25.1	25.4
GSM1900, GPRS 4Tx	14.5	14.9	14.9	14.7	14.6	15.0	23.5	24.0	23.9	23.8	23.9
GSM1900, EDGE 1Tx	18.0	17.6	18.0	17.8	17.5	17.7	25.7	25.8	25.6	25.5	25.8
GSM1900, EDGE 2Tx	15.9	15.7	15.8	15.6	15.8	15.5	23.5	23.2	23.2	23.0	23.4
GSM1900, EDGE 3Tx	15.0	14.5	14.5	14.5	14.8	14.5	21.6	22.0	21.6	22.0	21.9
GSM1900, EDGE 4Tx	13.3	13.1	13.3	13.5	13.5	13.2	20.4	20.1	20.4	20.3	20.1
WCDMA II	16.1	16.4	16.3	16.4	16.2	16.0	23.7	23.7	24.0	23.8	23.6
WCDMA V	15.6	15.5	16.0	15.7	15.9	15.8	23.3	23.1	23.4	23.2	23.4

Output Power Verification in dBm for EUT Bottom Edge											
Distance (mm)	6	7	8	9	10	11	12	13	14	15	16
GSM1900, GPRS 1Tx	20.8	20.8	20.6	20.7	20.5	20.7	29.5	29.5	30.0	29.5	29.5
GSM1900, GPRS 2Tx	17.9	18.0	17.8	17.7	17.8	17.8	26.6	27.0	26.9	26.5	27.0
GSM1900, GPRS 3Tx	16.4	16.3	16.3	16.5	16.5	16.4	25.2	25.0	25.5	25.3	25.4
GSM1900, GPRS 4Tx	14.8	14.6	14.7	14.6	14.6	15.0	23.8	23.9	23.6	23.9	23.5
GSM1900, EDGE 1Tx	17.9	17.5	17.7	17.6	17.8	18.0	25.6	26.0	25.7	26.0	25.6
GSM1900, EDGE 2Tx	15.9	15.5	15.6	15.8	15.7	16.0	23.1	23.0	23.3	23.5	23.2
GSM1900, EDGE 3Tx	14.8	14.6	14.9	14.5	14.6	14.6	21.6	21.7	21.7	21.7	21.9
GSM1900, EDGE 4Tx	13.1	13.2	13.2	13.0	13.5	13.1	20.0	20.3	20.4	20.0	20.4
WCDMA II	16.0	16.0	16.3	16.0	16.2	16.5	23.6	23.6	23.6	23.6	23.6
WCDMA V	15.9	15.5	15.7	15.7	15.7	15.7	23.0	23.1	23.5	23.5	23.0

Proximity Sensor Coverage (KDB 616217 D04 §6.3)

The proximity sensor coverage was determined per KDB 616217 for rear face and applicable edge. Summary for proximity sensor active region is illustrated in below.

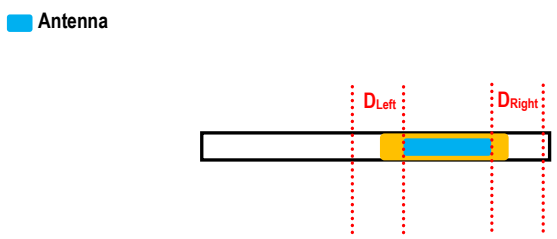	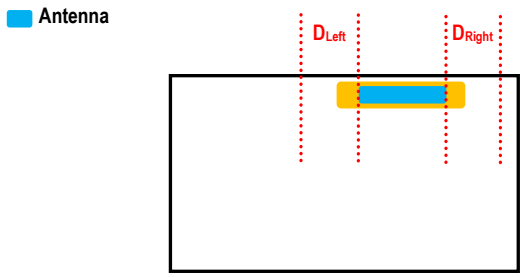
P-sensor Coverage for Rear Face: D_{Left} is 0 mm, D_{Right} is 10 mm	**P-sensor Coverage for Bottom Edge:** D_{Left} is 3 mm, D_{Right} is 13 mm

Proximity Sensor Tilt Angle Influences (KDB 616217 D04 §6.4)

The proximity sensor tilt angle influence was determined per KDB 616217 for applicable edge. Summary for proximity sensor tilt angle influence is shown in below.

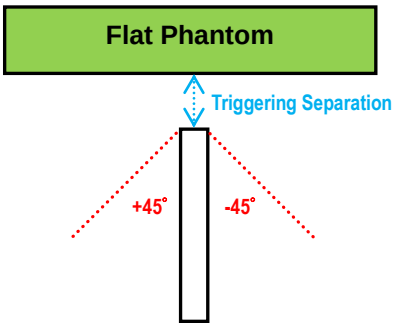

Orientation	Separation Distance (mm)	Tilt Angle										
		-45°	-40°	-30°	-20°	-10°	0°	10°	20°	30°	40°	45°
Bottom Edge	10	On	On	On	On	On	On	On	On	On	On	On

Summary for Proximity Sensor Triggering Test

According to the procedures noticed in KDB 616217 D04, the proximity sensor triggering distance is 15 mm for EUT Rear Face, and 11 mm for Bottom Side. The separation distance of 11 mm determined by the smallest triggering distance on Bottom Side is used to access the tilt angle influence and the sensor does not release during ±45 degree. Therefore, the smallest separation distance for tilt angle influence is 10 mm for the Bottom Side. The conservation triggering distances based on the separation distance for the sensor trigger / not triggered as EUT with power reduction at 0 mm, and EUT without power reduction at 14 mm for EUT Rear Face, and 9 mm for Top Side were used to test SAR.

The power reduction is depends on the proximity sensor input. For a steady SAR test, the power reduction was enabled or disabled manually by engineering software during SAR testing.

<Connections between EUT and System Simulator>

For WWAN SAR testing, the EUT was linked and controlled by base station emulator (Agilent E5515C is used for GSM/WCDMA/CDMA, and Anritsu MT8820C is used for LTE). Communication between the EUT and the emulator was established by air link. The distance between the EUT and the communicating antenna of the emulator is larger than 50 cm and the output power radiated from the emulator antenna is at least 30 dB smaller than the output power of EUT. The EUT was set from the emulator to radiate maximum output power during SAR testing.

<Considerations Related to GSM / GPRS / EDGE for Setup and Testing>

The maximum multi-slot capability supported by this device is as below.

1. This EUT is class B device
2. This EUT supports GPRS multi-slot class 33 (max. uplink: 4, max. downlink: 5, total timeslots: 6)
3. This EUT supports EDGE multi-slot class 33 (max. uplink: 4, max. downlink: 5, total timeslots: 6)

For GSM850 frequency band, the power control level is set to 5 for GSM mode and GPRS (GMSK: CS1), and set to 8 for EDGE (GMSK: MCS1, 8PSK: MCS9). For GSM1900 frequency band, the power control level is set to 0 for GSM mode and GPRS (GMSK: CS1), and set to 2 for EDGE (GMSK: MCS1, 8PSK: MCS9).

SAR test reduction for GPRS and EDGE modes is determined by the source-based time-averaged output power specified for production units, including tune-up tolerance. The data mode with highest specified time-averaged output power should be tested for SAR compliance in the applicable exposure conditions. For modes with the same specified maximum output power and tolerance, the higher number time-slot configuration should be tested.

<Considerations Related to WCDMA for Setup and Testing>

WCDMA Handsets Body-worn SAR

SAR for body-worn configurations is measured using a 12.2 kbps RMC with TPC bits configured to all "1's". The 3G SAR test reduction procedure is applied to other spreading codes and multiple $DPDCH_n$ configurations supported by the handset with 12.2 kbps RMC as the primary mode.

Handsets with Release 5 HSDPA

The 3G SAR test reduction procedure is applied to HSDPA body-worn configurations with 12.2 kbps RMC as the primary mode. Otherwise, SAR is measured for HSDPA using the HSDPA body SAR procedures in the "Release 5 HSDPA Data Devices", for the highest reported SAR body-worn exposure configuration in 12.2 kbps RMC. Handsets with both HSDPA and HSUPA are tested according to Release 6 HSPA test procedures.

Release 5 HSDPA Data Devices

The 3G SAR test reduction procedure is applied to body SAR with 12.2 kbps RMC as the primary mode. Otherwise, body SAR for HSDPA is measured using an FRC with H-Set 1 in Sub-test 1 and a 12.2 kbps RMC configured in Test Loop Mode 1, for the highest reported SAR configuration in 12.2 kbps RMC without HSDPA. HSDPA is configured according to the applicable UE category of a test device. The number of HS-DSCH / HS-PDSCHs, HARQ processes, minimum inter-TTI interval, transport block sizes and RV coding sequence are defined by the H-set. To maintain a consistent test configuration and stable transmission conditions, QPSK is used in the H-set for SAR testing. HS-DPCCH should be configured with a CQI feedback cycle of 4 ms and a CQI repetition factor of 2 to maintain a constant rate of active CQI slots. DPCCH and DPDCH gain factors (β_c, β_d), and HS-DPCCH power offset parameters (Δ_{ACK}, Δ_{NACK}, Δ_{CQI}) are set according to values indicated in below. The CQI value is determined by the UE category, transport block size, number of HS-PDSCHs and modulation used in the H-set.

Sub-test	β_c	β_d	β_d (SF)	β_c / β_d	β_{hs} (1)	CM (dB)(2)	MPR
1	2 / 15	15 / 15	64	2 / 15	4 / 15	0.0	0
2	12 / 15 (3)	15 / 15 (3)	64	12 / 15 (3)	24 / 15	1.0	0
3	15 / 15	8 / 15	64	15 / 8	30 / 15	1.5	0.5
4	15 / 15	4 / 15	64	15 / 4	30 / 15	1.5	0.5

Note 1: Δ_{ACK}, Δ_{NACK} and Δ_{CQI} = 8 ⇔ $A_{hs} = \beta_{hs} / \beta_c$ = 30 / 15 ⇔ β_{hs} = 30 / 15 * β_c.
Note 2: CM = 1 for β_c / β_d = 12 / 15, β_{hs} / β_c = 24 / 15.
Note 3: For subtest 2 the β_c / β_d ratio of 12 / 15 for the TFC during the measurement period (TF1, TF0) is achieved by setting the signaled gain factors for the reference TFC (TF1, TF1) to β_c = 11 / 15 and β_d = 15 / 15.

<Considerations Related to WLAN for Setup and Testing>

In general, various vendor specific external test software and chipset based internal test modes are typically used for SAR measurement. These chipset based test mode utilities are generally hardware and manufacturer dependent, and often include substantial flexibility to reconfigure or reprogram a device. A Wi-Fi device must be configured to transmit continuously at the required data rate, channel bandwidth and signal modulation, using the highest transmission duty factor supported by the test mode tools for SAR measurement. The test frequencies established using test mode must correspond to the actual channel frequencies. When 802.11 frame gaps are accounted for in the transmission, a maximum transmission duty factor of 92 - 96% is typically achievable in most test mode configurations. A minimum transmission duty factor of 85% is required to avoid certain hardware and device implementation issues related to wide range SAR scaling. In addition, a periodic transmission duty factor is required for current generation SAR systems to measure SAR correctly. The reported SAR must be scaled to 100% transmission duty factor to determine compliance at the maximum tune-up tolerance limit.

According to KDB 248227 D01, this device has installed WLAN engineering testing software which can provide continuous transmitting RF signal. During WLAN SAR testing, this device was operated to transmit continuously at the maximum transmission duty with specified transmission mode, operating frequency, lowest data rate, and maximum output power.

Initial Test Configuration

An initial test configuration is determined for OFDM transmission modes in 2.4 GHz and 5 GHz bands according to the channel bandwidth, modulation and data rate combination(s) with the highest maximum output power specified for production units in each standalone and aggregated frequency band. When the same maximum power is specified for multiple transmission modes in a frequency band, the largest channel bandwidth, lowest order modulation, lowest data rate and lowest order 802.11a/g/n/ac mode is used for SAR measurement, on the highest measured output power channel in the initial test configuration, for each frequency band.

Subsequent Test Configuration

SAR measurement requirements for the remaining 802.11 transmission mode configurations that have not been tested in the initial test configuration are determined separately for each standalone and aggregated frequency band, in each exposure condition, according to the maximum output power specified for production units. Additional power measurements may be required to determine if SAR measurements are required for subsequent highest output power channels in a subsequent test configuration. When the highest reported SAR for the initial test configuration according to the initial test position or fixed exposure position requirements, is adjusted by the ratio of the subsequent test configuration to initial test configuration specified maximum output power and the adjusted SAR is ≤ 1.2 W/kg, SAR is not required for that subsequent test configuration.

SAR Test Configuration and Channel Selection

When multiple channel bandwidth configurations in a frequency band have the same specified maximum output power, the initial test configuration is using largest channel bandwidth, lowest order modulation, lowest data rate, and lowest order 802.11 mode (i.e., 802.11a is chosen over 802.11n then 802.11ac or 802.11g is chosen over 802.11n). After an initial test configuration is determined, if multiple test channels have the same measured maximum output power, the channel chosen for SAR measurement is determined according to the following.

1) The channel closest to mid-band frequency is selected for SAR measurement.

2) For channels with equal separation from mid-band frequency; for example, high and low channels or two mid-band channels, the higher frequency (number) channel is selected for SAR measurement.

4.2 EUT Testing Position

The EUT was tested in Rear Face, Right Side, and Left Side of EUT with phantom 0 cm gap.

4.2.1 SAR Test Exclusion Evaluations

According to KDB 447498 D01, the SAR test exclusion condition is based on source-based time-averaged maximum conducted output power, adjusted for tune-up tolerance, and the minimum test separation distance required for the exposure conditions. The SAR exclusion threshold is determined by the following formula.

1. For the test separation distance <= 50 mm

$$\frac{\textbf{Max. Tune up Power}_{(mW)}}{\textbf{Min. Test Separation Distance}_{(mm)}} \times \sqrt{f_{(GHz)}} \leq 3.0 \text{ for SAR-1g, } \leq 7.5 \text{ for SAR-10g}$$

When the minimum test separation distance is < 5 mm, a distance of 5 mm is applied to determine SAR test exclusion.

2. For the test separation distance > 50 mm, and the frequency at 100 MHz to 1500 MHz

$$\left[(\text{Threshold at 50 mm in Step 1}) + (\text{Test Separation Distance} - 50\text{ mm}) \times \left(\frac{f_{(MHz)}}{150}\right)\right]_{(mW)}$$

3. For the test separation distance > 50 mm, and the frequency at > 1500 MHz to 6 GHz

$$[(\text{Threshold at 50 mm in Step 1}) + (\text{Test Separation Distance} - 50\text{ mm}) \times 10]_{(mW)}$$

Mode	Max. Tune-up Power (dBm)	Max. Tune-up Power (mW)	Rear Face			Top Side			Bottom Side			Left Side			Right Side		
			Ant. to Surface (mm)	Calculated Result	Require SAR Testing?	Ant. to Surface (mm)	Calculated Result	Require SAR Testing?	Ant. to Surface (mm)	Calculated Result	Require SAR Testing?	Ant. to Surface (mm)	Calculated Result	Require SAR Testing?	Ant. to Surface (mm)	Calculated Result	Require SAR Testing?
GSM 850	24.2	263.03	5	48.5	**YES**	228	1170 mW	No	2	48.5	**YES**	2	48.5	**YES**	2	48.5	**YES**
GSM 1900	21.2	131.83	5	36.4	**YES**	228	1889 mW	No	2	36.4	**YES**	2	36.4	**YES**	2	36.4	**YES**
WCDMA II	24.0	251.19	5	69.4	**YES**	228	1889 mW	No	2	69.4	**YES**	2	69.4	**YES**	2	69.4	**YES**
WCDMA V	23.5	223.87	5	41.2	**YES**	228	1168 mW	No	2	41.2	**YES**	2	41.2	**YES**	2	41.2	**YES**
WLAN 2.4G	13.5	22.39	5	7	**YES**	20	1.8	No	197	1566 mW	No	109	686 mw	No	3	7	**YES**
WLAN 5.2G	9.0	7.94	5	3.6	**YES**	20	0.9	No	197	1536 mW	No	109	656 mw	No	3	3.6	**YES**
WLAN 5.3G	9.0	7.94	5	3.7	**YES**	20	0.9	No	197	1535 mW	No	109	655 mw	No	3	3.7	**YES**
WLAN 5.6G	9.5	8.91	5	4.3	**YES**	20	1.1	No	197	1533 mW	No	109	653 mw	No	3	4.3	**YES**
WLAN 5.8G	9.5	8.91	5	4.3	**YES**	20	1.1	No	197	1532 mW	No	109	652 mw	No	3	4.3	**YES**
BT	3.5	2.24	5	0.7	No	20	0.2	No	197	1565 mW	No	109	685 mw	No	3	0.7	No

Note:

1. When separation distance <= 50 mm and the calculated result shown in above table is <= 3.0 for SAR-1g exposure condition, or <= 7.5 for SAR-10g exposure condition, the SAR testing exclusion is applied.
2. When separation distance > 50 mm and the device output power is less than the calculated result (power threshold, mW) shown in above table, the SAR testing exclusion is applied.

Right View

Mode	Max. Tune-up Power (dBm)	Max. Tune-up Power (mW)	Top Side			Rear Face 1			Rear Face 2		
			Ant. to Surface (mm)	Calculated Result	Require SAR Testing?	Ant. to Surface (mm)	Calculated Result	Require SAR Testing?	Ant. to Surface (mm)	Calculated Result	Require SAR Testing?
WLAN 2.4G	13.5	22.39	17	2.1	No	10	3.5	**YES**	13	2.7	No
WLAN 5.2G	9	7.94	17	1.1	No	10	1.8	No	13	1.4	No
WLAN 5.3G	9	7.94	17	1.1	No	10	1.8	No	13	1.4	No
WLAN 5.6G	9.5	8.91	17	1.3	No	10	2.1	No	13	1.6	No
WLAN 5.8G	9.5	8.91	17	1.3	No	10	2.2	No	13	1.7	No
BT	3.5	2.24	17	0.2	No	10	0.4	No	13	0.3	No

Note:

1. When separation distance <= 50 mm and the calculated result shown in above table is <= 3.0 for SAR-1g exposure condition, or <= 7.5 for SAR-10g exposure condition, the SAR testing exclusion is applied.
2. When separation distance > 50 mm and the device output power is less than the calculated result (power threshold, mW) shown in above table, the SAR testing exclusion is applied.

4.2.2 Simultaneous Transmission Possibilities

The simultaneous transmission possibilities for this device are listed as below.

Simultaneous TX Combination	Capable Transmit Configurations	Body Exposure Condition
1	GSM850 (Data) + WLAN (Data)	Yes
2	GSM1900 (Data) + WLAN (Data)	Yes
3	WCDMA II (Data) + WLAN (Data)	Yes
5	WCDMA V (Data) + WLAN (Data)	Yes
22	GSM850 (Data) + BT (Data)	Yes
23	GSM1900 (Data) + BT (Data)	Yes
24	WCDMA II (Data) + BT (Data)	Yes
26	WCDMA V (Data) + BT (Data)	Yes

Note :

1. The 2.4G WLAN and 5G WLAN cannot transmit simultaneously.
2. The WLAN and Bluetooth cannot transmit simultaneously, so there is no co-location test requirement for WLAN and Bluetooth.

4.3 Tissue Verification

The measuring results for tissue simulating liquid are shown as below.

Test Date	Tissue Type	Frequency (MHz)	Liquid Temp. (℃)	Measured Conductivity (σ)	Measured Permittivity (ε_r)	Target Conductivity (σ)	Target Permittivity (ε_r)	Conductivity Deviation (%)	Permittivity Deviation (%)
Sep. 22, 2015	Body	835	23.1	1.008	53.982	0.97	55.2	3.92	-2.21
Sep. 22, 2015	Body	835	23.6	1.010	54.138	0.97	55.2	4.12	-1.92
Sep. 22, 2015	Body	1900	23.0	1.585	50.818	1.52	53.3	4.28	-4.66
Sep. 24, 2015	Body	1900	23.6	1.575	53.799	1.52	53.3	3.62	0.94
Aug. 18, 2015	Body	2450	22.7	2.022	50.924	1.95	52.7	3.69	-3.37
Aug. 17, 2015	Body	5300	22.8	5.316	50.949	5.42	48.9	-1.92	4.19
Aug. 17, 2015	Body	5600	22.8	5.825	50.395	5.77	48.5	0.95	3.91
Aug. 17, 2015	Body	5800	22.8	6.124	49.901	6.00	48.2	2.07	3.53

Note:

The dielectric properties of the tissue simulating liquid must be measured within 24 hours before the SAR testing and within ±5% of the target values. Liquid temperature during the SAR testing must be within ±2 ℃.

4.4 System Validation

The SAR measurement system was validated according to procedures in KDB 865664 D01. The validation status in tabulated summary is as below.

Test Date	Probe S/N	Calibration Point		Measured Conductivity (σ)	Measured Permittivity (ε_r)	Validation for CW			Validation for Modulation		
						Sensitivity Range	Probe Linearity	Probe Isotropy	Modulation Type	Duty Factor	PAR
Sep. 22, 2015	3650	Body	835	1.008	53.982	Pass	Pass	Pass	GMSK	Pass	N/A
Sep. 22, 2015	3971	Body	835	1.010	54.138	Pass	Pass	Pass	N/A	N/A	N/A
Sep. 22, 2015	3650	Body	1900	1.585	50.818	Pass	Pass	Pass	N/A	N/A	N/A
Sep. 24, 2015	3971	Body	1900	1.575	53.799	Pass	Pass	Pass	GMSK	Pass	N/A
Aug. 18, 2015	3971	Body	2450	2.022	50.924	Pass	Pass	Pass	OFDM	N/A	Pass
Aug. 17, 2015	3650	Body	5300	5.316	50.949	Pass	Pass	Pass	OFDM	N/A	Pass
Aug. 17, 2015	3650	Body	5600	5.825	50.395	Pass	Pass	Pass	OFDM	N/A	Pass
Aug. 17, 2015	3650	Body	5800	6.124	49.901	Pass	Pass	Pass	OFDM	N/A	Pass

4.5 System Verification

The measuring result for system verification is tabulated as below.

Test Date	Mode	Frequency (MHz)	1W Target SAR-1g (W/kg)	Measured SAR-1g (W/kg)	Normalized to 1W SAR-1g (W/kg)	Deviation (%)	Dipole S/N	Probe S/N	DAE S/N
Sep. 22, 2015	Body	835	9.40	2.35	9.40	0.00	4d092	3650	1277
Sep. 22, 2015	Body	835	9.40	2.49	9.96	5.96	4d092	3971	1431
Sep. 22, 2015	Body	1900	40.50	9.33	37.32	-7.85	5d036	3650	1277
Sep. 24, 2015	Body	1900	40.50	9.42	37.68	-6.96	5d036	3971	1431
Aug. 18, 2015	Body	2450	50.30	12.50	50.00	-0.60	835	3971	1431
Aug. 17, 2015	Body	5300	75.20	7.20	72.00	-4.26	1040	3650	1277
Aug. 17, 2015	Body	5600	79.00	7.77	77.70	-1.65	1040	3650	1277
Aug. 17, 2015	Body	5800	76.60	7.92	79.20	3.39	1040	3650	1277

Note:

Comparing to the reference SAR value provided by SPEAG, the validation data should be within its specification of 10 %. The result indicates the system check can meet the variation criterion and the plots can be referred to Appendix A of this report.

4.6 Maximum Output Power

4.6.1 Maximum Conducted Power

The maximum conducted average power (Unit: dBm) including tune-up tolerance is shown as below.

Mode	GSM850
GPRS (GMSK, 1Tx-slot)	32.0
GPRS (GMSK, 2Tx-slot)	29.5
GPRS (GMSK, 3Tx-slot)	28.5
GPRS (GMSK, 4Tx-slot)	27.0
EDGE (8PSK, 1Tx-slot)	26.5
EDGE (8PSK, 2Tx-slot)	24.0
EDGE (8PSK, 3Tx-slot)	22.5
EDGE (8PSK, 4Tx-slot)	21.0

Mode	GSM1900 (without Power Reduction)	GSM1900 (with Power Reduction)	Power Reduction (dB)
GPRS (GMSK, 1Tx-slot)	30.0	21.0	9.0
GPRS (GMSK, 2Tx-slot)	27.0	18.0	9.0
GPRS (GMSK, 3Tx-slot)	25.5	16.5	9.0
GPRS (GMSK, 4Tx-slot)	24.0	15.0	9.0
EDGE (8PSK, 1Tx-slot)	26.0	18.0	8.0
EDGE (8PSK, 2Tx-slot)	23.5	16.0	7.5
EDGE (8PSK, 3Tx-slot)	22.0	15.0	7.0
EDGE (8PSK, 4Tx-slot)	20.5	13.5	7.0

Mode	WCDMA Band II (without Power Reduction)	WCDMA Band II (with Power Reduction)	Power Reduction (dB)
RMC 12.2K	24.0	16.5	7.5
HSDPA	23.5	16.5	7.0
HSUPA	23.0	16.0	7.0

Mode	WCDMA Band V (without Power Reduction)	WCDMA Band V (with Power Reduction)	Power Reduction (dB)
RMC 12.2K	23.5	16.0	7.5
HSDPA	23.0	16.0	7.0
HSUPA	22.5	16.0	6.5

Mode	2.4G WLAN	5.2G WLAN	5.3G WLAN	5.6G WLAN	5.8G WLAN
802.11b	13.5	N/A	N/A	N/A	N/A
802.11g	12.5	N/A	N/A	N/A	N/A
802.11a	N/A	9.0	9.0	9.5	9.5
802.11n HT20	12.5	9.0	9.0	9.5	9.5
802.11n HT40	13.5	8.5	8.5	9.0	9.0

Mode	2.4G Bluetooth
Bluetooth DH	3.5

4.6.2 Measured Conducted Power Result

The measuring conducted average power (Unit: dBm) is shown as below.

Band	GSM850		
Channel	128	189	251
Frequency (MHz)	824.2	836.4	848.8
GPRS (GMSK, 1Tx-slot)	31.75	31.79	**31.92**
GPRS (GMSK, 2Tx-slot)	29.31	29.35	29.48
GPRS (GMSK, 3Tx-slot)	27.85	27.89	28.02
GPRS (GMSK, 4Tx-slot)	26.37	26.41	26.54
EDGE (8PSK, 1Tx-slot)	25.84	25.88	26.01
EDGE (8PSK, 2Tx-slot)	23.58	23.62	23.75
EDGE (8PSK, 3Tx-slot)	22.13	22.17	22.30
EDGE (8PSK, 4Tx-slot)	20.69	20.73	20.86
Maximum Frame-Averaged Output Power			
GPRS (GMSK, 1Tx-slot)	22.75	22.79	22.92
GPRS (GMSK, 2Tx-slot)	23.31	23.35	23.48
GPRS (GMSK, 3Tx-slot)	23.59	23.63	**23.76**
GPRS (GMSK, 4Tx-slot)	23.37	23.41	23.54
EDGE (8PSK, 1Tx-slot)	16.84	16.88	17.01
EDGE (8PSK, 2Tx-slot)	17.58	17.62	17.75
EDGE (8PSK, 3Tx-slot)	17.87	17.91	18.04
EDGE (8PSK, 4Tx-slot)	17.69	17.73	17.86

Band	GSM1900			GSM1900		
Channel	512	512	512	512	661	810
Frequency (MHz)	1850.2	1850.2	1850.2	1850.2	1880.0	1909.8
	EUT without Power Reduction (P-Sensor NOT Triggered)			EUT with Power Reduction (P-Sensor Triggered)		
Maximum Burst-Averaged Output Power						
GPRS (GMSK, 1Tx-slot)	**29.14**	28.93	28.88	**20.21**	20.17	20.08
GPRS (GMSK, 2Tx-slot)	26.62	26.41	26.36	17.67	17.63	17.54
GPRS (GMSK, 3Tx-slot)	25.11	24.90	24.85	16.07	16.03	15.94
GPRS (GMSK, 4Tx-slot)	23.62	23.41	23.36	14.99	14.96	14.87
EDGE (8PSK, 1Tx-slot)	25.51	25.30	25.25	17.66	17.62	17.53
EDGE (8PSK, 2Tx-slot)	23.22	23.01	22.96	15.92	15.88	15.79
EDGE (8PSK, 3Tx-slot)	21.69	21.48	21.43	14.60	14.56	14.47
EDGE (8PSK, 4Tx-slot)	20.23	20.02	19.97	13.42	13.38	13.29
Maximum Frame-Averaged Output Power						
GPRS (GMSK, 1Tx-slot)	20.14	19.93	19.88	11.21	11.17	11.08
GPRS (GMSK, 2Tx-slot)	20.62	20.41	20.36	11.67	11.63	11.54
GPRS (GMSK, 3Tx-slot)	**20.85**	20.64	20.59	11.81	11.77	11.68
GPRS (GMSK, 4Tx-slot)	20.62	20.41	20.36	**11.99**	11.96	11.87
EDGE (8PSK, 1Tx-slot)	16.51	16.30	16.25	8.66	8.62	8.53
EDGE (8PSK, 2Tx-slot)	17.22	17.01	16.96	9.92	9.88	9.79
EDGE (8PSK, 3Tx-slot)	17.43	17.22	17.17	10.34	10.30	10.21
EDGE (8PSK, 4Tx-slot)	17.23	17.02	16.97	10.42	10.38	10.29

Note:

1. SAR testing was performed on the maximum frame-averaged power mode.
2. The frame-averaged power is linearly proportion to the slot number configured and it is linearly scaled the maximum burst-averaged power based on time slots. The calculated method is shown as below:
   Frame-averaged power = 10 x log (Burst-averaged power mW x Slot used / 8)

Band	WCDMA Band II			WCDMA Band V			3GPP MPR (dB)
Channel	9262	9400	9538	4132	4182	4233	
Frequency (MHz)	1852.4	1880.0	1907.6	826.4	836.4	846.6	
EUT without Power Reduction (P-Sensor NOT Triggered)							
RMC 12.2K	**23.57**	23.22	22.86	**23.48**	23.19	22.96	-
HSDPA Subtest-1	23.41	23.06	22.70	23.25	22.96	22.73	0
HSDPA Subtest-2	22.40	22.05	21.69	22.28	21.99	21.76	0
HSDPA Subtest-3	22.16	21.81	21.45	22.03	21.74	21.51	0.5
HSDPA Subtest-4	21.91	21.56	21.20	21.77	21.48	21.25	0.5
HSUPA Subtest-1	22.46	22.11	21.75	22.25	21.96	21.73	0
HSUPA Subtest-2	20.69	20.34	19.98	20.20	19.91	19.68	2
HSUPA Subtest-3	21.37	21.02	20.66	21.01	20.72	20.49	1
HSUPA Subtest-4	20.91	20.56	20.20	20.54	20.25	20.02	2
HSUPA Subtest-5	22.56	22.21	21.85	22.36	22.07	21.84	0
EUT with Power Reduction (P-Sensor Triggered)							
RMC 12.2K	**16.36**	16.03	15.72	**15.91**	15.81	15.63	-
HSDPA Subtest-1	16.32	15.99	15.68	15.90	15.80	15.62	-
HSDPA Subtest-2	16.29	15.96	15.65	15.86	15.76	15.58	-
HSDPA Subtest-3	16.24	15.91	15.60	15.85	15.75	15.57	-
HSDPA Subtest-4	16.28	15.95	15.64	15.87	15.77	15.59	-
HSUPA Subtest-1	15.74	15.41	15.10	15.88	15.78	15.60	-
HSUPA Subtest-2	15.71	15.38	15.07	15.80	15.70	15.52	-
HSUPA Subtest-3	15.68	15.35	15.04	15.72	15.62	15.44	-
HSUPA Subtest-4	15.65	15.32	15.01	15.67	15.57	15.39	-
HSUPA Subtest-5	15.72	15.39	15.08	15.86	15.76	15.58	-

<WLAN 2.4G>

Mode	802.11b		
Channel / Frequency (MHz)	1 (2412)	6 (2437)	11 (2462)
Average Power	11.13	**13.26**	11.11
Mode	802.11g		
Channel / Frequency (MHz)	1 (2412)	6 (2437)	11 (2462)
Average Power	12.33	**12.46**	12.43
Mode	802.11n (HT20)		
Channel / Frequency (MHz)	1 (2412)	6 (2437)	11 (2462)
Average Power	11.99	**12.09**	12.07
Mode	802.11n (HT40)		
Channel / Frequency (MHz)	3 (2422)	6 (2437)	9 (2452)
Average Power	13.01	**13.09**	12.94

<WLAN 5.2G>

Mode	802.11a			
Channel / Frequency (MHz)	36 (5180)	40 (5200)	44 (5220)	48 (5240)
Average Power	8.62	8.60	8.56	**8.68**
Mode	802.11n (HT20)			
Channel / Frequency (MHz)	36 (5180)	40 (5200)	44 (5220)	48 (5240)
Average Power	8.81	8.78	**8.88**	8.73
Mode	802.11n (HT40)			
Channel / Frequency (MHz)	38 (5190)		46 (5230)	
Average Power	**8.18**		8.14	

<WLAN 5.3G>

Mode	802.11a			
Channel / Frequency (MHz)	52 (5260)	56 (5280)	60 (5300)	64 (5320)
Average Power	8.67	8.77	**8.89**	8.81
Mode	802.11n (HT20)			
Channel / Frequency (MHz)	52 (5260)	56 (5280)	60 (5300)	64 (5320)
Average Power	8.79	8.85	**8.87**	8.86
Mode	802.11n (HT40)			
Channel / Frequency (MHz)	54 (5270)		62 (5310)	
Average Power	8.19		**8.32**	

<WLAN 5.6G>

Mode	802.11a							
Channel / Frequency (MHz)	100 (5500)	104 (5520)	108 (5540)	112 (5560)	116 (5580)	132 (5660)	136 (5680)	140 (5700)
Average Power	9.23	9.24	9.23	9.18	**9.48**	9.02	9.11	9.26
Mode	802.11n (HT20)							
Channel / Frequency (MHz)	100 (5500)	104 (5520)	108 (5540)	112 (5560)	116 (5580)	132 (5660)	136 (5680)	140 (5700)
Average Power	**9.42**	9.34	9.25	9.32	9.34	9.12	8.95	8.92
Mode	802.11n (HT40)							
Channel / Frequency (MHz)	102 (5510)				134 (5670)			
Average Power	**8.95**				8.60			

<WLAN 5.8G>

Mode	802.11a				
Channel / Frequency (MHz)	149 (5745)	153 (5765)	157 (5785)	161 (5805)	165 (5825)
Average Power	9.27	9.12	**9.30**	8.70	8.47
Mode	802.11n (HT20)				
Channel / Frequency (MHz)	149 (5745)	153 (5765)	157 (5785)	161 (5805)	165 (5825)
Average Power	**9.27**	9.24	9.13	8.84	8.53
Mode	802.11n (HT40)				
Channel / Frequency (MHz)	151 (5755)			159 (5795)	
Average Power	**8.85**			8.43	

<Bluetooth>

Mode	Bluetooth		
Channel / Frequency (MHz)	0 (2402)	39 (2441)	78 (2480)
Average Power	2.29	**3.37**	2.89

4.7 SAR Testing Results

4.7.1 SAR Test Reduction Considerations

<KDB 447498 D01, General RF Exposure Guidance>

Testing of other required channels within the operating mode of a frequency band is not required when the reported SAR for the mid-band or highest output power channel is:

(1) ≤ 0.8 W/kg or 2.0 W/kg, for 1-g or 10-g respectively, when the transmission band is ≤ 100 MHz

(2) ≤ 0.6 W/kg or 1.5 W/kg, for 1-g or 10-g respectively, when the transmission band is between 100 MHz and 200 MHz

(3) ≤ 0.4 W/kg or 1.0 W/kg, for 1-g or 10-g respectively, when the transmission band is ≥ 200 MHz

<KDB 941225 D01, 3G SAR Measurement Procedures>

The mode tested for SAR is referred to as the primary mode. The equivalent modes considered for SAR test reduction are denoted as secondary modes. Both primary and secondary modes must be in the same frequency band. When the maximum output power and tune-up tolerance specified for production units in a secondary mode is ≤ 1/4 dB higher than the primary mode or when the highest reported SAR of the primary mode is scaled by the ratio of specified maximum output power and tune-up tolerance of secondary to primary mode and the adjusted SAR is ≤ 1.2 W/kg, SAR measurement is not required for the secondary mode.

<KDB 248227 D01, SAR Guidance for Wi-Fi Transmitters>

(1) For handsets operating next to ear, hotspot mode or mini-tablet configurations, the initial test position procedures were applied. The test position with the highest extrapolated peak SAR will be used as the initial test position. When the reported SAR of initial test position is <= 0.4 W/kg, SAR testing for remaining test positions is not required. Otherwise, SAR is evaluated at the subsequent highest peak SAR positions until the reported SAR result is <= 0.8 W/kg or all test positions are measured.

(2) For WLAN 2.4 GHz, the highest measured maximum output power channel for DSSS was selected for SAR measurement. When the reported SAR is <= 0.8 W/kg, no further SAR testing is required. Otherwise, SAR is evaluated at the next highest measured output power channel. When any reported SAR is > 1.2 W/kg, SAR is required for the third channel. For OFDM modes (802.11g/n), SAR is not required when the highest reported SAR for DSSS is adjusted by the ratio of OFDM to DSSS specified maximum output power and it is <= 1.2 W/kg.

(3) For WLAN 5 GHz, the initial test configuration was selected according to the transmission mode with the highest maximum output power. When the reported SAR of initial test configuration is > 0.8 W/kg, SAR is required for the subsequent highest measured output power channel until the reported SAR result is <= 1.2 W/kg or all required channels are measured. For other transmission modes, SAR is not required when the highest reported SAR for initial test configuration is adjusted by the ratio of subsequent test configuration to initial test configuration specified maximum output power and it is <= 1.2 W/kg.

4.7.2 SAR Results for Body Exposure Condition

Plot No.	Band	Mode	Test Position	Separation Distance (mm)	Ch.	Power Reduction	Max. Tune-up Power (dBm)	Measured Conducted Power (dBm)	Scaling Factor	Power Drift (dB)	Measured SAR-1g (W/kg)	Scaled SAR-1g (W/kg)
	GSM850	GPRS11	Rear Face	0	251	w/o	28.5	28.02	1.12	0.09	0.223	0.25
	GSM850	GPRS11	Left Side	0	251	w/o	28.5	28.02	1.12	0.05	0.02	0.02
	GSM850	GPRS11	Right Side	0	251	w/o	28.5	28.02	1.12	0.09	0.035	0.04
01	GSM850	GPRS11	Bottom Side	0	251	w/o	28.5	28.02	1.12	0.01	0.901	**1.01**
	GSM850	GPRS11	Bottom Side	0	251	w/o	28.5	28.02	1.12	0.03	0.888	0.99
	GSM850	GPRS11	Bottom Side	0	128	w/o	28.0	27.85	1.04	0.05	0.849	0.88
	GSM850	GPRS11	Bottom Side	0	189	w/o	28.0	27.89	1.03	0.09	0.858	0.88
	GSM1900	GPRS11	Rear Face	0	512	w/	16.5	16.07	1.10	0.11	0.140	0.15
	GSM1900	GPRS11	Rear Face	1.4	512	w/o	25.5	25.11	1.09	0.15	0.102	0.11
	GSM1900	GPRS11	Left Side	0	512	w/o	25.5	25.11	1.09	0.11	0.169	0.18
	GSM1900	GPRS11	Right Side	0	512	w/o	25.5	25.11	1.09	0.16	0.060	0.07
	GSM1900	GPRS11	Bottom Side	0	512	w/	16.5	16.07	1.10	0.09	0.115	0.13
02	GSM1900	GPRS11	Bottom Side	0.9	512	w/o	25.5	25.11	1.09	-0.15	0.298	**0.33**
03	WCDMA II	RMC12.2K	Rear Face	0	9262	w/	16.5	16.36	1.03	-0.15	1	**1.03**
	WCDMA II	RMC12.2K	Rear Face	0	9262	w/	16.5	16.36	1.03	0.15	0.95	0.98
	WCDMA II	RMC12.2K	Rear Face	0	9400	w/	16.5	16.03	1.11	-0.15	0.91	1.01
	WCDMA II	RMC12.2K	Rear Face	0	9538	w/	16.5	15.72	1.20	-0.13	0.768	0.92
	WCDMA II	RMC12.2K	Rear Face	1.4	9262	w/o	24.0	23.57	1.10	-0.13	0.335	0.37
	WCDMA II	RMC12.2K	Left Side	0	9262	w/o	24.0	23.57	1.10	-0.17	0.374	0.41
	WCDMA II	RMC12.2K	Right Side	0	9262	w/o	24.0	23.57	1.10	0.17	0.235	0.26
	WCDMA II	RMC12.2K	Bottom Side	0	9262	w/	16.5	16.36	1.03	-0.07	0.688	0.71
	WCDMA II	RMC12.2K	Bottom Side	0.9	9262	w/o	24.0	23.57	1.10	-0.01	0.811	0.90
	WCDMA II	RMC12.2K	Bottom Side	0.9	9400	w/o	24.0	23.22	1.20	-0.12	0.822	0.98
	WCDMA II	RMC12.2K	Bottom Side	0.9	9538	w/o	24.0	22.86	1.30	-0.09	0.614	0.80
	WCDMA V	RMC12.2K	Rear Face	0	4132	w/	16.0	15.91	1.02	-0.06	0.108	0.11
04	WCDMA V	RMC12.2K	Rear Face	1.4	4132	w/o	23.5	23.48	1.00	-0.10	0.452	**0.45**
	WCDMA V	RMC12.2K	Left Side	0	4132	w/o	23.5	23.48	1.00	0.12	0.175	0.18
	WCDMA V	RMC12.2K	Right Side	0	4132	w/o	23.5	23.48	1.00	-0.04	0.208	0.21
	WCDMA V	RMC12.2K	Bottom Side	0	4132	w/	16.0	15.91	1.02	-0.13	0.223	0.23
	WCDMA V	RMC12.2K	Bottom Side	0.9	4132	w/o	23.5	23.48	1.00	-0.01	0.288	0.29

Plot No.	Band	Mode	Test Position	Ch.	Max. Tune-up Power (dBm)	Measured Conducted Power (dBm)	Scaling Factor	Power Drift (dB)	Measured SAR-1g (W/kg)	Scaled SAR-1g (W/kg)
	2.4GWLAN	802.11b	Rear Face	6	13.5	13.26	1.06	0	0	0.00
05	2.4GWLAN	802.11b	Right Side	6	13.5	13.26	1.06	0.01	0.75	**0.79**
	5.3GWLAN	802.11a	Rear Face	60	9.0	8.89	1.03	0.11	0.0027	0.00
06	5.3GWLAN	802.11a	Right Side	60	9.0	8.89	1.03	0	0.536	**0.55**
	5.6GWLAN	802.11a	Rear Face	116	9.5	9.48	1.00	0.11	0.0139	0.01
07	5.6GWLAN	802.11a	Right Side	116	9.5	9.48	1.00	-0.13	0.710	**0.71**
	5.8GWLAN	802.11a	Rear Face	157	9.5	9.30	1.05	0	0.0015	0.00
08	5.8GWLAN	802.11a	Right Side	157	9.5	9.30	1.05	-0.01	0.466	**0.49**

4.7.3 SAR Measurement Variability

According to KDB 865664 D01, SAR measurement variability was assessed for each frequency band, which is determined by the SAR probe calibration point and tissue-equivalent medium used for the device measurements. When both head and body tissue-equivalent media are required for SAR measurements in a frequency band, the variability measurement procedures should be applied to the tissue medium with the highest measured SAR, using the highest measured SAR configuration for that tissue-equivalent medium. Alternatively, if the highest measured SAR for both head and body tissue-equivalent media are ≤ 1.45 W/kg and the ratio of these highest SAR values, i.e., largest divided by smallest value, is ≤ 1.10, the highest SAR configuration for either head or body tissue-equivalent medium may be used to perform the repeated measurement. These additional measurements are repeated after the completion of all measurements requiring the same head or body tissue-equivalent medium in a frequency band. The test device should be returned to ambient conditions (normal room temperature) with the battery fully charged before it is re-mounted on the device holder for the repeated measurement(s) to minimize any unexpected variations in the repeated results.

SAR repeated measurement procedure:

1. When the highest measured SAR is < 0.80 W/kg, repeated measurement is not required.
2. When the highest measured SAR is >= 0.80 W/kg, repeat that measurement once.
3. If the ratio of largest to smallest SAR for the original and first repeated measurements is > 1.20, or when the original or repeated measurement is >= 1.45 W/kg, perform a second repeated measurement.
4. If the ratio of largest to smallest SAR for the original, first and second repeated measurements is > 1.20, and the original, first or second repeated measurement is >= 1.5 W/kg, perform a third repeated measurement.

Band	Mode	Test Position	Separation Distance (cm)	Ch.	Original Measured SAR-1g (W/kg)	1st Repeated SAR-1g (W/kg)	L/S Ratio	2nd Repeated SAR-1g (W/kg)	L/S Ratio	3rd Repeated SAR-1g (W/kg)	L/S Ratio
GSM 850	GPRS11	Bottom Side	0	251	0.901	0.888	1.01	N/A	N/A	N/A	N/A
WCDMA II	RMC12.2K	Rear Face	0	9262	1.00	0.95	1.05	N/A	N/A	N/A	N/A

4.7.4 Simultaneous Multi-band Transmission Evaluation

<Estimated SAR Calculation>

According to KDB 447498 D01, when standalone SAR test exclusion applies to an antenna that transmits simultaneously with other antennas, the standalone SAR was estimated according to following formula to result in substantially conservative SAR values of <= 0.4 W/kg to determine simultaneous transmission SAR test exclusion.

$$\text{Estimated SAR} = \frac{\text{Max. Tune up Power}_{(\text{mW})}}{\text{Min. Test Separation Distance}_{(\text{mm})}} \times \frac{\sqrt{f_{(\text{GHz})}}}{7.5}$$

If the minimum test separation distance is < 5 mm, a distance of 5 mm is used for estimated SAR calculation. When the test separation distance is > 50 mm, the 0.4 W/kg is used for SAR-1g.

Mode / Band	Frequency (GHz)	Max. Tune-up Power (dBm)	Test Position	Separation Distance (mm)	Estimated SAR (W/kg)
GSM850	0.849	24.2	Body	5	0.40
GSM1900	1.910	21.2	Body	5	0.40
WCDMA II	1.908	24.0	Body	5	0.40
WCDMA V	0.847	23.5	Body	5	0.40
WLAN 2.4G	2.462	13.5	Body	5	0.40
WLAN 5.2G	5.24	9	Body	5	0.40
WLAN 5.3G	5.32	9	Body	5	0.40
WLAN 5.6G	5.7	9.5	Body	5	0.40
WLAN 5.8G	5.825	9.5	Body	5	0.40
BT (DSS)	2.48	3.5	Body	5	0.09

Note:

1. The separation distance is determined from the outer housing of the EUT to the user.
2. When standalone SAR testing is not required, an estimated SAR can be applied to determine simultaneous transmission SAR test exclusion.

<SAR Summation Analysis>

Simultaneous transmission SAR test exclusion is determined for each operating configuration and exposure condition according to the reported standalone SAR of each applicable simultaneous transmitting antenna. When the sum of SAR_{1g} of all simultaneously transmitting antennas in an operating mode and exposure condition combination is within the SAR limit (SAR_{1g} 1.6 W/kg), the simultaneous transmission SAR is not required. When the sum of SAR_{1g} is greater than the SAR limit (SAR_{1g} 1.6 W/kg), SAR test exclusion is determined by the SPLSR.

No.	Conditions (SAR1 + SAR2)	Exposure Condition	Test Position	Max. SAR1	Max. SAR2	SAR Summation	SPLSR Analysis
1	GSM850 + WLAN (DTS)	Body	Rear Face	0.25	0.00	0.25	Σ SAR < 1.6, Not required
			Top Side	0.40	0.40	0.80	Σ SAR < 1.6, Not required
			Bottom Side	1.01	0.40	1.41	Σ SAR < 1.6, Not required
			Left Side	0.02	0.40	0.42	Σ SAR < 1.6, Not required
			Right Side	0.04	0.79	0.83	Σ SAR < 1.6, Not required
2	GSM850 + WLAN (NII)	Body	Rear Face	0.25	0.01	0.26	Σ SAR < 1.6, Not required
			Top Side	0.40	0.40	0.80	Σ SAR < 1.6, Not required
			Bottom Side	1.01	0.40	1.41	Σ SAR < 1.6, Not required
			Left Side	0.02	0.40	0.42	Σ SAR < 1.6, Not required
			Right Side	0.04	0.71	0.75	Σ SAR < 1.6, Not required
3	GSM850 + BT (DSS)	Body	Rear Face	0.25	0.09	0.34	Σ SAR < 1.6, Not required
			Top Side	0.40	0.09	0.49	Σ SAR < 1.6, Not required
			Bottom Side	1.01	0.09	1.10	Σ SAR < 1.6, Not required
			Left Side	0.02	0.09	0.11	Σ SAR < 1.6, Not required
			Right Side	0.04	0.09	0.13	Σ SAR < 1.6, Not required

No.	Conditions (SAR1 + SAR2)	Exposure Condition	Test Position	Max. SAR1	Max. SAR2	SAR Summation	SPLSR Analysis
4	GSM1900 + WLAN (DTS)	Body	Rear Face	0.15	0.00	0.15	Σ SAR < 1.6, Not required
			Top Side	0.40	0.40	0.80	Σ SAR < 1.6, Not required
			Bottom Side	0.33	0.40	0.73	Σ SAR < 1.6, Not required
			Left Side	0.18	0.40	0.58	Σ SAR < 1.6, Not required
			Right Side	0.07	0.79	0.86	Σ SAR < 1.6, Not required
5	GSM1900 + WLAN (NII)	Body	Rear Face	0.15	0.01	0.16	Σ SAR < 1.6, Not required
			Top Side	0.40	0.40	0.80	Σ SAR < 1.6, Not required
			Bottom Side	0.33	0.40	0.73	Σ SAR < 1.6, Not required
			Left Side	0.18	0.40	0.58	Σ SAR < 1.6, Not required
			Right Side	0.07	0.71	0.78	Σ SAR < 1.6, Not required
6	GSM1900 + BT (DSS)	Body	Rear Face	0.15	0.09	0.24	Σ SAR < 1.6, Not required
			Top Side	0.40	0.09	0.49	Σ SAR < 1.6, Not required
			Bottom Side	0.33	0.09	0.42	Σ SAR < 1.6, Not required
			Left Side	0.18	0.09	0.27	Σ SAR < 1.6, Not required
			Right Side	0.07	0.09	0.16	Σ SAR < 1.6, Not required

No.	Conditions (SAR1 + SAR2)	Exposure Condition	Test Position	Max. SAR1	Max. SAR2	SAR Summation	SPLSR Analysis
7	WCDMA II + WLAN (DTS)	Body	Rear Face	1.03	0.00	1.03	Σ SAR < 1.6, Not required
			Top Side	0.40	0.40	0.80	Σ SAR < 1.6, Not required
			Bottom Side	0.98	0.40	1.38	Σ SAR < 1.6, Not required
			Left Side	0.41	0.40	0.81	Σ SAR < 1.6, Not required
			Right Side	0.26	0.79	1.05	Σ SAR < 1.6, Not required
8	WCDMA II + WLAN (NII)	Body	Rear Face	1.03	0.01	1.04	Σ SAR < 1.6, Not required
			Top Side	0.40	0.40	0.80	Σ SAR < 1.6, Not required
			Bottom Side	0.98	0.40	1.38	Σ SAR < 1.6, Not required
			Left Side	0.41	0.40	0.81	Σ SAR < 1.6, Not required
			Right Side	0.26	0.71	0.97	Σ SAR < 1.6, Not required
9	WCDMA II + BT (DSS)	Body	Rear Face	1.03	0.09	1.12	Σ SAR < 1.6, Not required
			Top Side	0.40	0.09	0.49	Σ SAR < 1.6, Not required
			Bottom Side	0.98	0.09	1.07	Σ SAR < 1.6, Not required
			Left Side	0.41	0.09	0.50	Σ SAR < 1.6, Not required
			Right Side	0.26	0.09	0.35	Σ SAR < 1.6, Not required

No.	Conditions (SAR1 + SAR2)	Exposure Condition	Test Position	Max. SAR1	Max. SAR2	SAR Summation	SPLSR Analysis
10	WCDMA V + WLAN (DTS)	Body	Rear Face	0.45	0.00	0.45	Σ SAR < 1.6, Not required
			Top Side	0.40	0.40	0.80	Σ SAR < 1.6, Not required
			Bottom Side	0.29	0.40	0.69	Σ SAR < 1.6, Not required
			Left Side	0.18	0.40	0.58	Σ SAR < 1.6, Not required
			Right Side	0.21	0.79	1.00	Σ SAR < 1.6, Not required
11	WCDMA V + WLAN (NII)	Body	Rear Face	0.45	0.01	0.46	Σ SAR < 1.6, Not required
			Top Side	0.40	0.40	0.80	Σ SAR < 1.6, Not required
			Bottom Side	0.29	0.40	0.69	Σ SAR < 1.6, Not required
			Left Side	0.18	0.40	0.58	Σ SAR < 1.6, Not required
			Right Side	0.21	0.71	0.92	Σ SAR < 1.6, Not required
12	WCDMA V + BT (DSS)	Body	Rear Face	0.45	0.09	0.54	Σ SAR < 1.6, Not required
			Top Side	0.40	0.09	0.49	Σ SAR < 1.6, Not required
			Bottom Side	0.29	0.09	0.38	Σ SAR < 1.6, Not required
			Left Side	0.18	0.09	0.27	Σ SAR < 1.6, Not required
			Right Side	0.21	0.09	0.30	Σ SAR < 1.6, Not required

Test Engineer： Mars Chang, and Terry Huang

5. Calibration of Test Equipment

Equipment	Manufacturer	Model	SN	Cal. Date	Cal. Interval
System Validation Dipole	SPEAG	D835V2	4d092	Jun. 23, 2015	2 Years
System Validation Dipole	SPEAG	D1900V2	5d036	Jan. 26, 2015	2 Years
System Validation Dipole	SPEAG	D2450V2	835	Mar. 30, 2015	2 Years
System Validation Dipole	SPEAG	D5GHzV2	1040	Jun. 22, 2015	2 Years
Dosimetric E-Field Probe	SPEAG	EX3DV4	3650	Jul. 23, 2015	1 Year
Dosimetric E-Field Probe	SPEAG	EX3DV4	3971	Mar. 26, 2015	1 Year
Data Acquisition Electronics	SPEAG	DAE4	1431	Mar. 20, 2015	1 Year
Data Acquisition Electronics	SPEAG	DAE4	1277	Jul. 22, 2015	1 Year
Wireless Communication Test Set	Agilent	E5515C	MY50266628	Dec. 05, 2013	2 Years
Universal Radio Communication Tester	R&S	CMU200	104484	Mar. 11, 2015	2 Years
ENA Series Network Analyzer	Agilent	E5071C	MY46214281	Jun. 23, 2015	1 Year
EXA Spectrum Analyzer	Agilent	N9010A	MY53470455	Feb. 26, 2015	1 Year
MXG Analong Signal Generator	Agilent	N5181A	MY50143868	Jul. 06, 2015	1 Year
Power Meter	Anritsu	ML2495A	1218009	Jul. 06, 2015	1 Year
Power Sensor	Anritsu	MA2411B	1207252	Jul. 06, 2015	1 Year
Thermometer	YFE	YF-160A	130504579	Jul. 06, 2014	1 Year
Thermometer	YFE	YF-160A	110600361	Feb. 26, 2015	1 Year

6. Measurement Uncertainty

Source of Uncertainty	Tolerance (± %)	Probability Distribution	Divisor	Ci (1g)	Ci (10g)	Standard Uncertainty (± %, 1g)	Standard Uncertainty (± %, 10g)	Vi
Measurement System								
Probe Calibration	6.0	Normal	1	1	1	6.0	6.0	∞
Axial Isotropy	4.7	Rectangular	√3	0.707	0.707	1.9	1.9	∞
Hemispherical Isotropy	9.6	Rectangular	√3	0.707	0.707	3.9	3.9	∞
Boundary Effect	1.0	Rectangular	√3	1	1	0.6	0.6	∞
Linearity	4.7	Rectangular	√3	1	1	2.7	2.7	∞
System Detection Limits	0.25	Rectangular	√3	1	1	0.14	0.14	∞
Readout Electronics	0.3	Normal	1	1	1	0.3	0.3	∞
Response Time	0.0	Rectangular	√3	1	1	0.0	0.0	∞
Integration Time	1.7	Rectangular	√3	1	1	1.0	1.0	∞
RF Ambient Conditions - Noise	3.0	Rectangular	√3	1	1	1.7	1.7	∞
RF Ambient Conditions - Reflections	3.0	Rectangular	√3	1	1	1.7	1.7	∞
Probe Positioner Mechanical Tolerance	0.4	Rectangular	√3	1	1	0.2	0.2	∞
Probe Positioning with Respect to Phantom Shell	2.9	Rectangular	√3	1	1	1.7	1.7	∞
Extrapolation, interpolation, and integration algorithms for max. SAR evaluation	2.0	Rectangular	√3	1	1	1.2	1.2	∞
Test Sample Related								
Test Sample Positioning	1.5 / 0.7	Normal	1	1	1	1.5	0.7	32
Device Holder Uncertainty	4.2 / 1.8	Normal	1	1	1	4.2	1.8	32
Output Power Variation - SAR Drift Measurement	5.0	Rectangular	√3	1	1	2.9	2.9	∞
Phantom and Tissue Parameters								
Phantom Uncertainty (Shape and Thickness Tolerances)	7.2	Rectangular	√3	1	1	4.2	4.2	∞
Liquid Conductivity - Deviation from Target Values	5.0	Rectangular	√3	0.64	0.43	1.8	1.2	∞
Liquid Conductivity - Measurement Uncertainty	1.0	Normal	1	0.64	0.43	0.6	0.4	25
Liquid Permittivity - Deviation from Target Values	5.0	Rectangular	√3	0.60	0.49	1.7	1.4	∞
Liquid Permittivity - Measurement Uncertainty	0.5	Normal	1	0.60	0.49	0.3	0.2	25
Combined Standard Uncertainty						± 11.2 %	± 10.4 %	
Expanded Uncertainty (K=2)						**± 22.4 %**	**± 20.8 %**	

Uncertainty budget for frequency range 300 MHz to 3 GHz

Source of Uncertainty	Tolerance (± %)	Probability Distribution	Divisor	Ci (1g)	Ci (10g)	Standard Uncertainty (± %, 1g)	Standard Uncertainty (± %, 10g)	Vi
Measurement System								
Probe Calibration	6.55	Normal	1	1	1	6.55	6.55	∞
Axial Isotropy	4.7	Rectangular	√3	0.707	0.707	1.9	1.9	∞
Hemispherical Isotropy	9.6	Rectangular	√3	0.707	0.707	3.9	3.9	∞
Boundary Effect	2.0	Rectangular	√3	1	1	1.2	1.2	∞
Linearity	4.7	Rectangular	√3	1	1	2.7	2.7	∞
System Detection Limits	0.25	Rectangular	√3	1	1	0.14	0.14	∞
Readout Electronics	0.3	Normal	1	1	1	0.3	0.3	∞
Response Time	0.0	Rectangular	√3	1	1	0.0	0.0	∞
Integration Time	1.7	Rectangular	√3	1	1	1.0	1.0	∞
RF Ambient Conditions - Noise	3.0	Rectangular	√3	1	1	1.7	1.7	∞
RF Ambient Conditions - Reflections	3.0	Rectangular	√3	1	1	1.7	1.7	∞
Probe Positioner Mechanical Tolerance	0.4	Rectangular	√3	1	1	0.2	0.2	∞
Probe Positioning with Respect to Phantom Shell	6.7	Rectangular	√3	1	1	3.9	3.9	∞
Extrapolation, interpolation, and integration algorithms for max. SAR evaluation	4.0	Rectangular	√3	1	1	2.3	2.3	∞
Test Sample Related								
Test Sample Positioning	1.5 / 0.7	Normal	1	1	1	1.5	0.7	32
Device Holder Uncertainty	4.2 / 1.8	Normal	1	1	1	4.2	1.8	32
Output Power Variation - SAR Drift Measurement	5.0	Rectangular	√3	1	1	2.9	2.9	∞
Phantom and Tissue Parameters								
Phantom Uncertainty (Shape and Thickness Tolerances)	7.6	Rectangular	√3	1	1	4.4	4.4	∞
Liquid Conductivity - Deviation from Target Values	5.0	Rectangular	√3	0.64	0.43	1.8	1.2	∞
Liquid Conductivity - Measurement Uncertainty	1.0	Normal	1	0.64	0.43	0.6	0.4	25
Liquid Permittivity - Deviation from Target Values	5.0	Rectangular	√3	0.60	0.49	1.7	1.4	∞
Liquid Permittivity - Measurement Uncertainty	0.5	Normal	1	0.60	0.49	0.3	0.2	25
Combined Standard Uncertainty						± 12.3 %	± 11.5 %	
Expanded Uncertainty (K=2)						**± 24.6 %**	**± 23.0 %**	

Uncertainty budget for frequency range 3 GHz to 6 GHz

7. Information on the Testing Laboratories

We, Bureau Veritas Consumer Products Services (H.K.) Ltd., Taoyuan Branch, were founded in 1988 to provide our best service in EMC, Radio, Telecom and Safety consultation. Our laboratories are accredited and approved according to ISO/IEC 17025.

If you have any comments, please feel free to contact us at the following:

Taiwan HwaYa EMC/RF/Safety/Telecom Lab:
Add: No. 19, Hwa Ya 2nd Rd, Wen Hwa Vil., Kwei Shan Hsiang, Taoyuan Hsien 333, Taiwan, R.O.C.
Tel: 886-3-318-3232
Fax: 886-3-327-0892

Taiwan LinKo EMC/RF Lab:
Add: No. 47-2, 14th Ling, Chia Pau Vil., Linkou Dist., New Taipei City 244, Taiwan, R.O.C.
Tel: 886-2-2605-2180
Fax: 886-2-2605-1924

Taiwan HsinChu EMC/RF Lab:
Add: No. 81-1, Lu Liao Keng, 9th Ling, Wu Lung Vil., Chiung Lin Township, Hsinchu County 307, Taiwan, R.O.C.
Tel: 886-3-593-5343
Fax: 886-3-593-5342

Email: service.adt@tw.bureauveritas.com
Web Site: www.adt.com.tw

The road map of all our labs can be found in our web site also.

---END---

Appendix A. SAR Plots of System Verification

The plots for system verification with largest deviation for each SAR system combination are shown as follows.

Test Laboratory: Bureau Veritas ADT SAR/HAC Testing Lab Date: 2015/09/22

System Check_B835_150922

DUT: Dipole 835 MHz; Type: D835V2; SN: 4d092

Communication System: CW; Frequency: 835 MHz;Duty Cycle: 1:1
Medium: B07T10N3_0922 Medium parameters used: f = 835 MHz; σ = 1.01 S/m; ε_r = 54.138; ρ = 1000 kg/m^3
Ambient Temperature：23.7 ℃； Liquid Temperature：23.6 ℃

DASY5 Configuration:
- Probe: EX3DV4 - SN3971; ConvF(9.73, 9.73, 9.73); Calibrated: 2015/03/26;
- Sensor-Surface: 1.4mm (Mechanical Surface Detection)
- Electronics: DAE4 Sn1431; Calibrated: 2015/03/20
- Phantom: ELI Phantom_1245; Type: QDOVA;
- Measurement SW: DASY52, Version 52.8 (8); SEMCAD X Version 14.6.10 (7331)

Pin=250mW/Area Scan (61x61x1): Interpolated grid: dx=1.500 mm, dy=1.500 mm
Maximum value of SAR (interpolated) = 3.13 W/kg

Pin=250mW/Zoom Scan (5x5x7)/Cube 0: Measurement grid: dx=8mm, dy=8mm, dz=5mm
Reference Value = 53.88 V/m; Power Drift = -0.04 dB
Peak SAR (extrapolated) = 3.59 W/kg
SAR(1 g) = 2.49 W/kg; SAR(10 g) = 1.65 W/kg
Maximum value of SAR (measured) = 3.11 W/kg

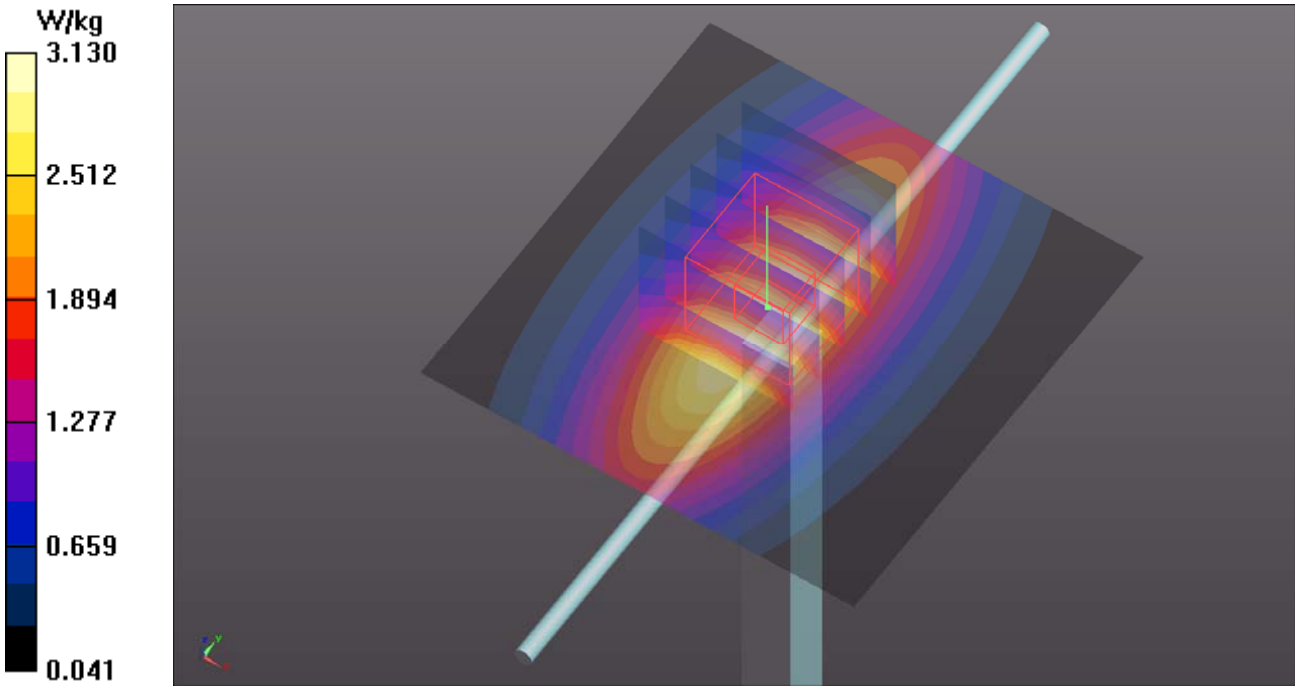

Test Laboratory: Bureau Veritas ADT SAR/HAC Testing Lab Date: 2015/09/22

System Check_B1900_150922

DUT: Dipole 1900 MHz; Type: D1900V2; SN: 5d036

Communication System: CW; Frequency: 1900 MHz;Duty Cycle: 1:1
Medium: B16T20N1_0922 Medium parameters used: f = 1900 MHz; σ = 1.585 S/m; ε_r = 50.818; ρ = 1000 kg/m^3
Ambient Temperature：23.5 ℃； Liquid Temperature：23.0 ℃

DASY5 Configuration:
- Probe: EX3DV4 - SN3650; ConvF(7.59, 7.59, 7.59); Calibrated: 2015/07/23;
- Sensor-Surface: 1.4mm (Mechanical Surface Detection)
- Electronics: DAE4 Sn1277; Calibrated: 2015/07/22
- Phantom: ELI Phantom_1204; Type: QDOVA;
- Measurement SW: DASY52, Version 52.8 (8); SEMCAD X Version 14.6.10 (7331)

Pin=250mW/Area Scan (61x61x1): Interpolated grid: dx=1.500 mm, dy=1.500 mm
Maximum value of SAR (interpolated) = 13.9 W/kg

Pin=250mW/Zoom Scan (5x5x7)/Cube 0: Measurement grid: dx=8mm, dy=8mm, dz=5mm
Reference Value = 93.36 V/m; Power Drift = 0.01 dB
Peak SAR (extrapolated) = 16.8 W/kg
SAR(1 g) = 9.33 W/kg; SAR(10 g) = 4.87 W/kg
Maximum value of SAR (measured) = 13.1 W/kg

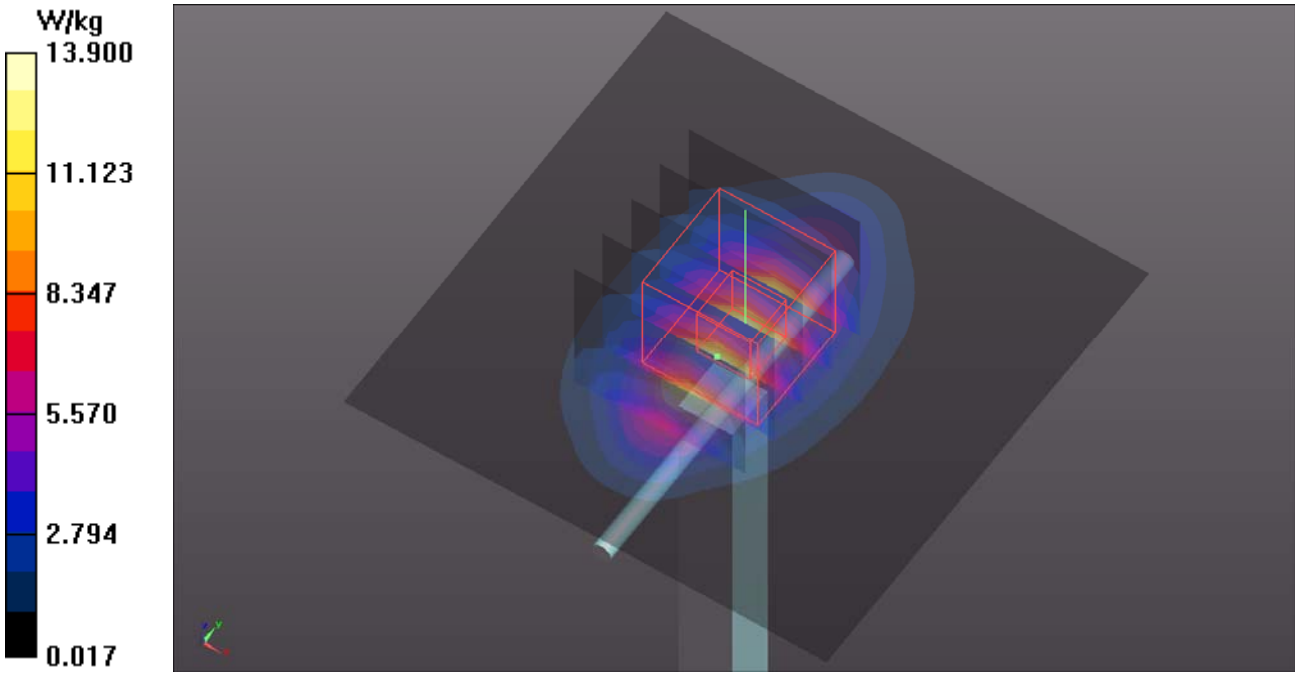

Test Laboratory: Bureau Veritas ADT SAR/HAC Testing Lab Date: 2015/08/18

System Check_B2450_150818

DUT: Dipole 2450 MHz; Type: D2450V2; SN: 835

Communication System: CW; Frequency: 2450 MHz;Duty Cycle: 1:1
Medium: B19T27N3_0818 Medium parameters used: f = 2450 MHz; σ = 2.022 S/m; ε_r = 50.924; ρ = 1000 kg/m^3
Ambient Temperature：23.6 ℃; Liquid Temperature：22.7 ℃

DASY5 Configuration:
- Probe: EX3DV4 - SN3971; ConvF(7.12, 7.12, 7.12); Calibrated: 2015/03/26;
- Sensor-Surface: 1.4mm (Mechanical Surface Detection)
- Electronics: DAE4 Sn1431; Calibrated: 2015/03/20
- Phantom: ELI Phantom_1206; Type: QDOVA;
- Measurement SW: DASY52, Version 52.8 (8); SEMCAD X Version 14.6.10 (7331)

Pin=250mW/Area Scan (81x81x1): Interpolated grid: dx=1.200 mm, dy=1.200 mm
Maximum value of SAR (interpolated) = 19.3 W/kg

Pin=250mW/Zoom Scan (7x7x7)/Cube 0: Measurement grid: dx=5mm, dy=5mm, dz=5mm
Reference Value = 97.85 V/m; Power Drift = -0.01 dB
Peak SAR (extrapolated) = 26.4 W/kg
SAR(1 g) = 12.5 W/kg; SAR(10 g) = 5.73 W/kg
Maximum value of SAR (measured) = 19.2 W/kg

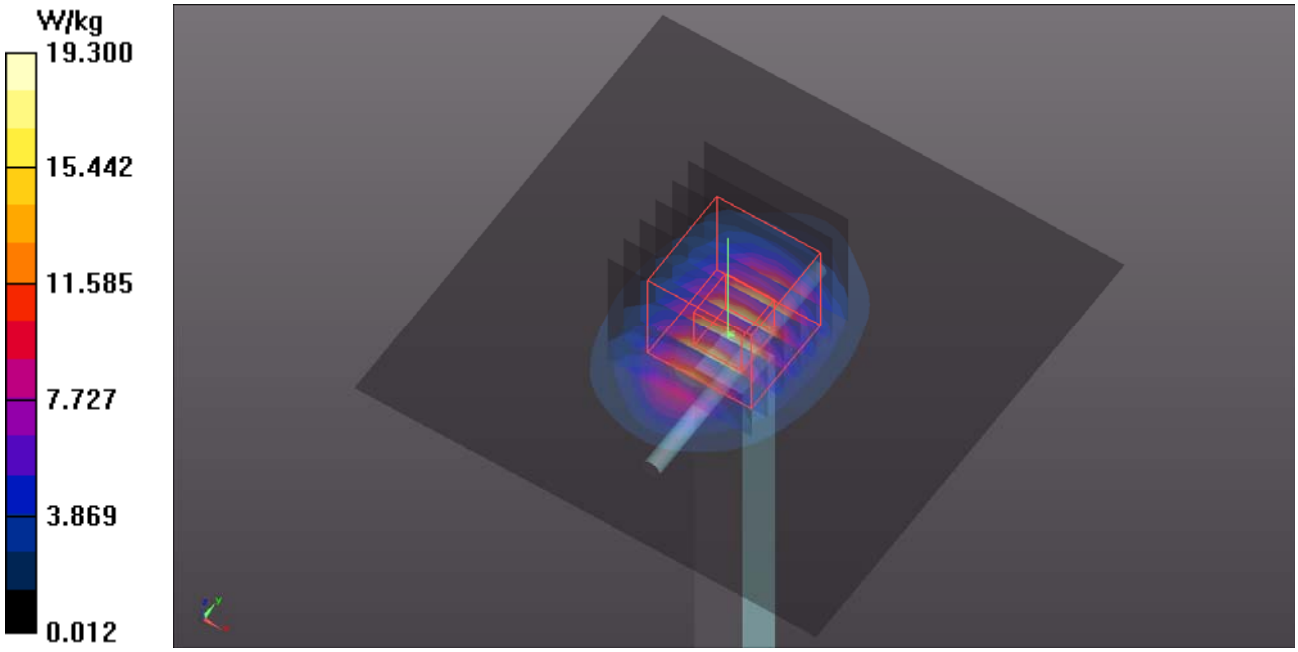

Test Laboratory: Bureau Veritas ADT SAR/HAC Testing Lab Date: 2015/08/17

System Check_B5300_150817

DUT: Dipole 5 GHz; Type: D5GHzV2; SN: 1040

Communication System: CW; Frequency: 5300 MHz;Duty Cycle: 1:1
Medium: B34T60N1_0817 Medium parameters used: f = 5300 MHz; σ = 5.316 S/m; ε_r = 50.949; ρ = 1000 kg/m^3
Ambient Temperature：23.8 ℃； Liquid Temperature：22.8 ℃

DASY5 Configuration:
- Probe: EX3DV4 - SN3650; ConvF(4.64, 4.64, 4.64); Calibrated: 2015/07/23;
- Sensor-Surface: 1.4mm (Mechanical Surface Detection)
- Electronics: DAE4 Sn1277; Calibrated: 2015/07/22
- Phantom: ELI Phantom_1204; Type: QDOVA;
- Measurement SW: DASY52, Version 52.8 (8); SEMCAD X Version 14.6.10 (7331)

Pin=100mW/Area Scan (91x91x1): Interpolated grid: dx=1.000 mm, dy=1.000 mm
Maximum value of SAR (interpolated) = 15.2 W/kg

Pin=100mW/Zoom Scan (7x7x12)/Cube 0: Measurement grid: dx=4mm, dy=4mm, dz=2mm
Reference Value = 58.26 V/m; Power Drift = -0.02 dB
Peak SAR (extrapolated) = 28.6 W/kg
SAR(1 g) = 7.2 W/kg; SAR(10 g) = 2.05 W/kg
Maximum value of SAR (measured) = 15.0 W/kg

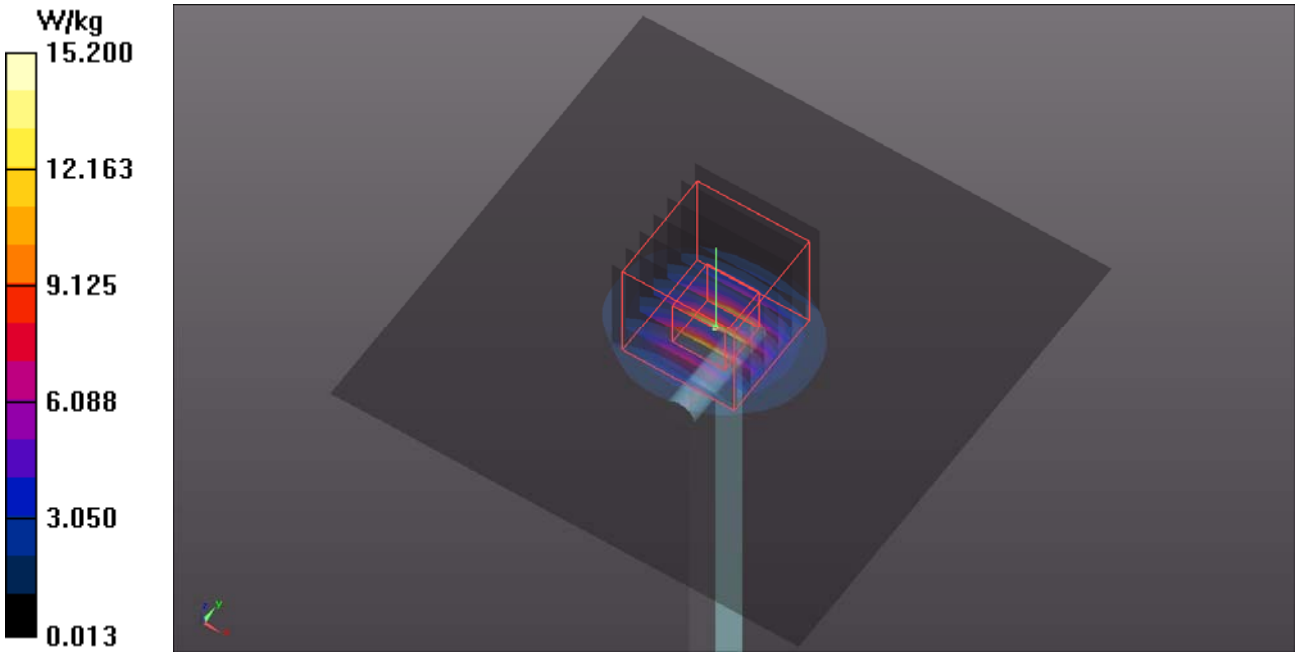

Test Laboratory: Bureau Veritas ADT SAR/HAC Testing Lab Date: 2015/08/17

System Check_B5600_150817

DUT: Dipole 5 GHz; Type: D5GHzV2; SN: 1040

Communication System: CW; Frequency: 5600 MHz;Duty Cycle: 1:1
Medium: B34T60N1_0817 Medium parameters used: f = 5600 MHz; σ = 5.825 S/m; ε_r = 50.395; ρ = 1000 kg/m^3
Ambient Temperature：23.8 ℃； Liquid Temperature：22.8 ℃

DASY5 Configuration:
- Probe: EX3DV4 - SN3650; ConvF(4.05, 4.05, 4.05); Calibrated: 2015/07/23;
- Sensor-Surface: 1.4mm (Mechanical Surface Detection)
- Electronics: DAE4 Sn1277; Calibrated: 2015/07/22
- Phantom: ELI Phantom_1204; Type: QDOVA;
- Measurement SW: DASY52, Version 52.8 (8); SEMCAD X Version 14.6.10 (7331)

Pin=100mW/Area Scan (91x91x1): Interpolated grid: dx=1.000 mm, dy=1.000 mm
Maximum value of SAR (interpolated) = 16.0 W/kg

Pin=100mW/Zoom Scan (7x7x12)/Cube 0: Measurement grid: dx=4mm, dy=4mm, dz=2mm
Reference Value = 59.93 V/m; Power Drift = 0.00 dB
Peak SAR (extrapolated) = 30.0 W/kg
SAR(1 g) = 7.77 W/kg; SAR(10 g) = 2.2 W/kg
Maximum value of SAR (measured) = 16.2 W/kg

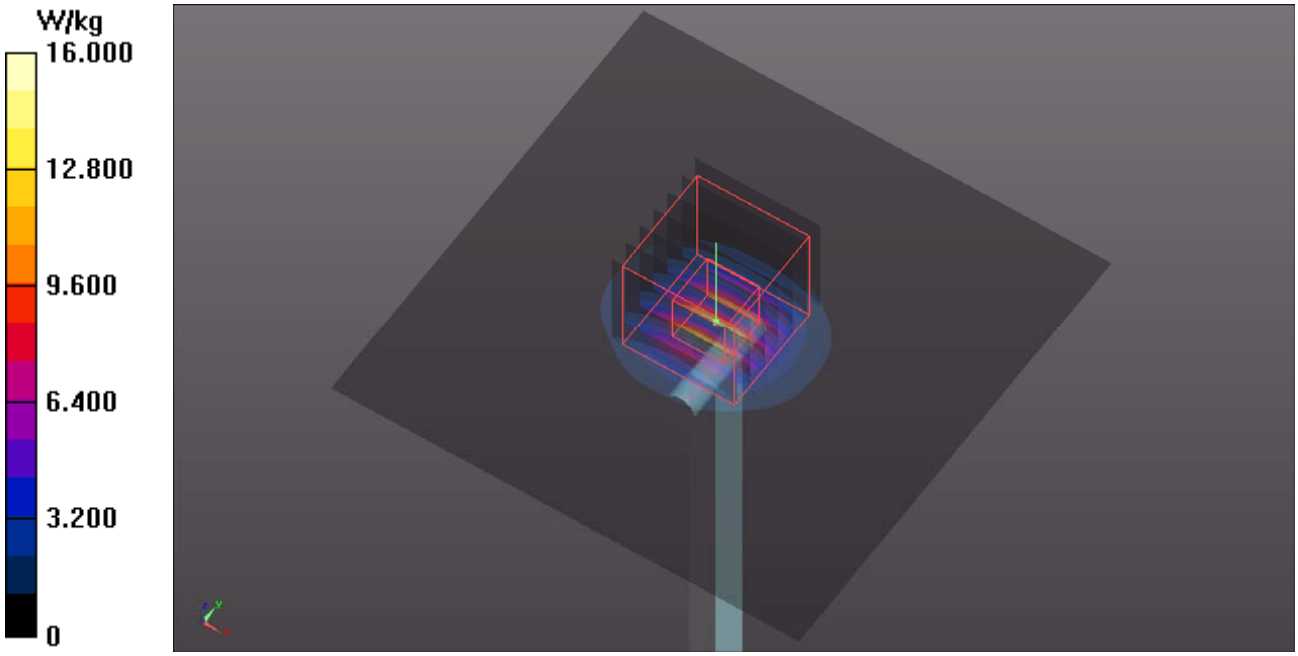

Test Laboratory: Bureau Veritas ADT SAR/HAC Testing Lab Date: 2015/08/17

System Check_B5800_150817

DUT: Dipole 5 GHz; Type: D5GHzV2; SN: 1040

Communication System: CW; Frequency: 5800 MHz;Duty Cycle: 1:1
Medium: B34T60N1_0817 Medium parameters used: f = 5800 MHz; σ = 6.124 S/m; ε_r = 49.901; ρ = 1000 kg/m^3
Ambient Temperature：23.8 ℃； Liquid Temperature：22.8 ℃

DASY5 Configuration:
- Probe: EX3DV4 - SN3650; ConvF(4.45, 4.45, 4.45); Calibrated: 2015/07/23;
- Sensor-Surface: 1.4mm (Mechanical Surface Detection)
- Electronics: DAE4 Sn1277; Calibrated: 2015/07/22
- Phantom: ELI Phantom_1204; Type: QDOVA;
- Measurement SW: DASY52, Version 52.8 (8); SEMCAD X Version 14.6.10 (7331)

Pin=100mW/Area Scan (91x91x1): Interpolated grid: dx=1.000 mm, dy=1.000 mm
Maximum value of SAR (interpolated) = 16.0 W/kg

Pin=100mW/Zoom Scan (7x7x12)/Cube 0: Measurement grid: dx=4mm, dy=4mm, dz=2mm
Reference Value = 57.19 V/m; Power Drift = 0.10 dB
Peak SAR (extrapolated) = 32.6 W/kg
SAR(1 g) = 7.92 W/kg; SAR(10 g) = 2.25 W/kg
Maximum value of SAR (measured) = 17.1 W/kg

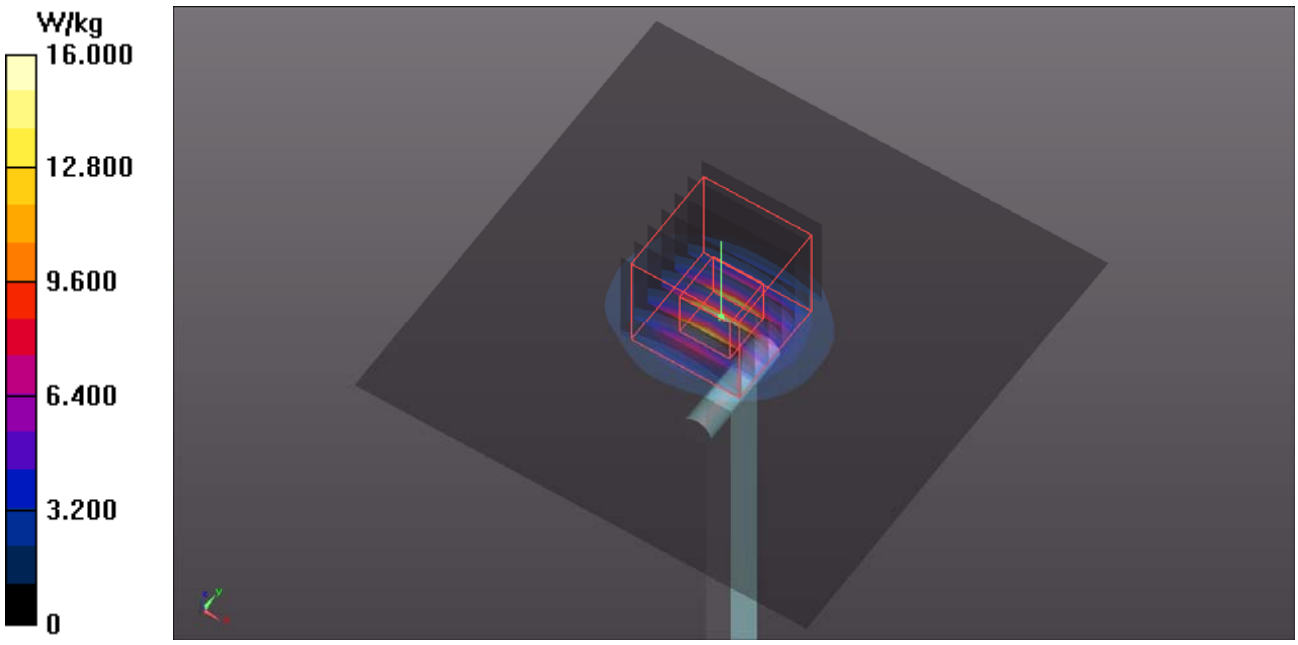

Appendix B. SAR Plots of SAR Measurement

The SAR plots for highest measured SAR in each exposure configuration, wireless mode and frequency band combination, and measured SAR > 1.5 W/kg are shown as follows.

P01 GSM850_GPRS11_Bottom Side_0cm_Ch251 P-Sensor OFF

DUT: 150722C11

Communication System: GPRS11; Frequency: 848.8 MHz;Duty Cycle: 1:2.67
Medium: B07T10N2_0922 Medium parameters used: f = 849 MHz; σ = 1.021 S/m; ε_r = 53.822; ρ = 1000 kg/m^3
Ambient Temperature：23.9 ℃； Liquid Temperature：23.1 ℃

DASY5 Configuration:
- Probe: EX3DV4 - SN3650; ConvF(9.47, 9.47, 9.47); Calibrated: 2015/07/23;
- Sensor-Surface: 1.4mm (Mechanical Surface Detection)
- Electronics: DAE4 Sn1277; Calibrated: 2015/07/22
- Phantom: ELI Phantom_1043; Type: QDOVA;
- Measurement SW: DASY52, Version 52.8 (8); SEMCAD X Version 14.6.10 (7331)

- Area Scan (101x61x1): Interpolated grid: dx=1.500 mm, dy=1.500 mm
Maximum value of SAR (interpolated) = 1.70 W/kg

- Zoom Scan (5x5x7)/Cube 0: Measurement grid: dx=8mm, dy=8mm, dz=5mm
Reference Value = 33.18 V/m; Power Drift = 0.01 dB
Peak SAR (extrapolated) = 1.81 W/kg
SAR(1 g) = 0.901 W/kg; SAR(10 g) = 0.442 W/kg
Maximum value of SAR (measured) = 1.37 W/kg

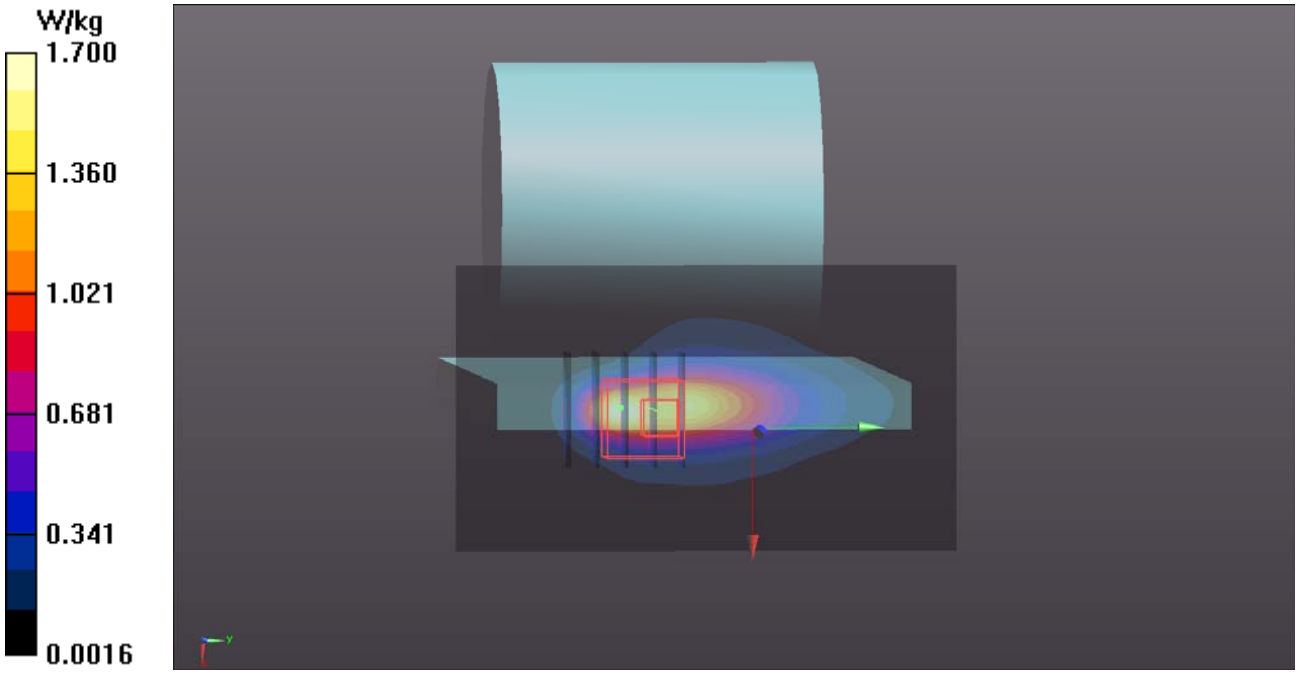

P02 GSM1900_GPRS11_Bpttom Side_0.9cm_Ch512_P-Sensor OFF

DUT: 150722C11

Communication System: GPRS11; Frequency: 1850.2 MHz;Duty Cycle: 1:2.67
Medium: B16T20N2_0924 Medium parameters used: f = 1850.2 MHz; σ = 1.532 S/m; ε_r = 53.944; ρ = 1000 kg/m^3
Ambient Temperature：23.7 ℃; Liquid Temperature：23.6 ℃

DASY5 Configuration:
- Probe: EX3DV4 - SN3971; ConvF(7.85, 7.85, 7.85); Calibrated: 2015/03/26;
- Sensor-Surface: 1.4mm (Mechanical Surface Detection)
- Electronics: DAE4 Sn1431; Calibrated: 2015/03/20
- Phantom: ELI Phantom_1245; Type: QDOVA;
- Measurement SW: DASY52, Version 52.8 (8); SEMCAD X Version 14.6.10 (7331)

- Area Scan (81x71x1): Interpolated grid: dx=1.500 mm, dy=1.500 mm
Maximum value of SAR (interpolated) = 0.450 W/kg

- Zoom Scan (5x5x7)/Cube 0: Measurement grid: dx=8mm, dy=8mm, dz=5mm
Reference Value = 13.70 V/m; Power Drift = -0.15 dB
Peak SAR (extrapolated) = 0.501 W/kg
SAR(1 g) = 0.298 W/kg; SAR(10 g) = 0.174 W/kg
Maximum value of SAR (measured) = 0.426 W/kg

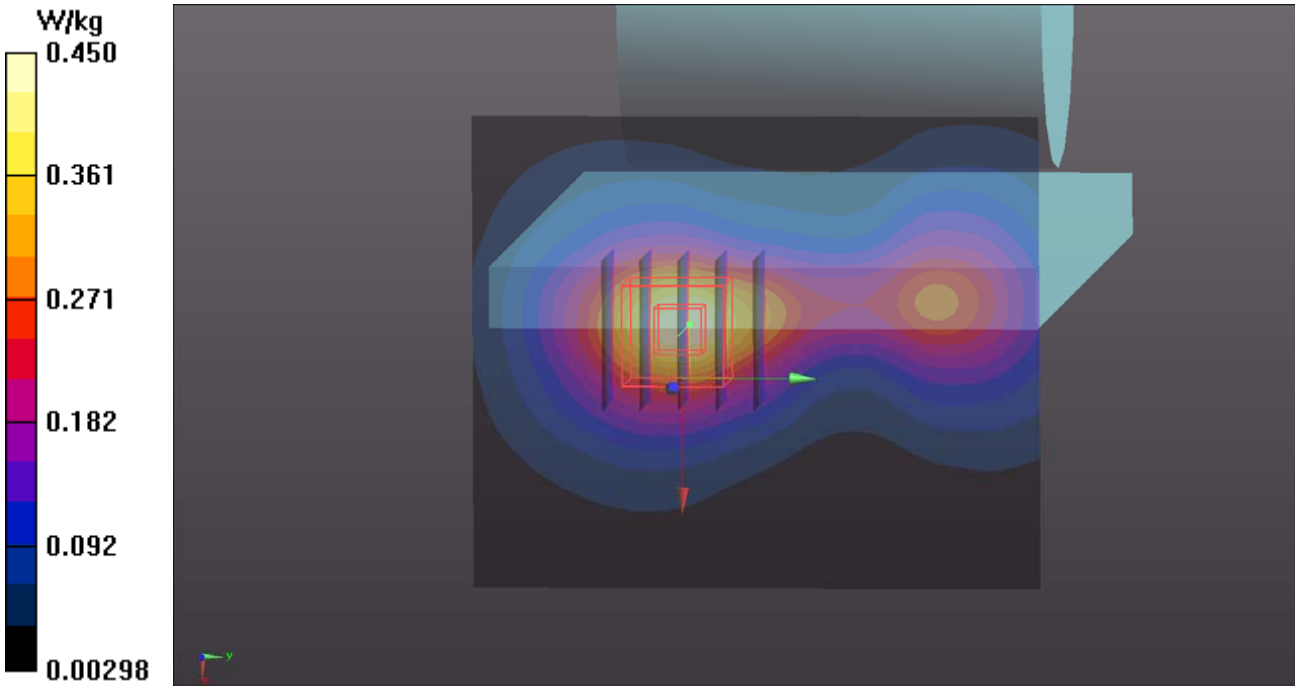

P03 WCDMA II_RMC12.2K_Rear Face_0cm_Ch9262_P-Sensor ON

DUT: 150722C11

Communication System: WCDMA; Frequency: 1852.4 MHz;Duty Cycle: 1:1
Medium: B16T20N1_0922 Medium parameters used: f = 1852.4 MHz; σ = 1.539 S/m; ε_r = 50.881; ρ = 1000 kg/m^3
Ambient Temperature：23.9 ℃； Liquid Temperature：23.1 ℃

DASY5 Configuration:
- Probe: EX3DV4 - SN3650; ConvF(7.59, 7.59, 7.59); Calibrated: 2015/07/23;
- Sensor-Surface: 1.4mm (Mechanical Surface Detection)
- Electronics: DAE4 Sn1277; Calibrated: 2015/07/22
- Phantom: ELI Phantom_1204; Type: QDOVA;
- Measurement SW: DASY52, Version 52.8 (8); SEMCAD X Version 14.6.10 (7331)

- Area Scan (101x161x1): Interpolated grid: dx=1.500 mm, dy=1.500 mm
Maximum value of SAR (interpolated) = 1.64 W/kg

- Zoom Scan (5x5x7)/Cube 0: Measurement grid: dx=8mm, dy=8mm, dz=5mm
Reference Value = 2.094 V/m; Power Drift = -0.15 dB
Peak SAR (extrapolated) = 2.00 W/kg
SAR(1 g) = 1 W/kg; SAR(10 g) = 0.497 W/kg
Maximum value of SAR (measured) = 1.58 W/kg

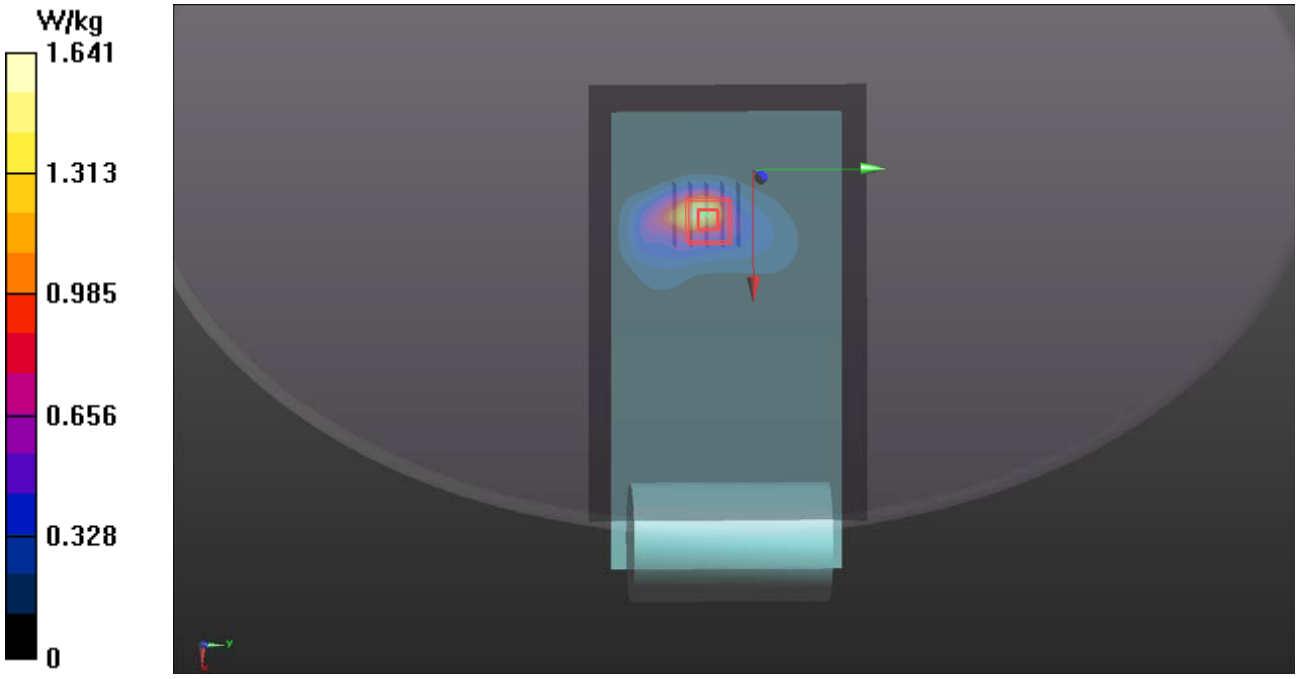

P04 WCDMA V_RMC12.2K_Rear Face_1.4cm_Ch4132_P-sensor OFF

DUT: 150722C11

Communication System: WCDMA; Frequency: 826.4 MHz;Duty Cycle: 1:1
Medium: B07T10N3_0922 Medium parameters used: f = 826.4 MHz; σ = 1.002 S/m; ε_r = 54.238; ρ = 1000 kg/m^3
Ambient Temperature：23.7 ℃; Liquid Temperature：23.6 ℃

DASY5 Configuration:
- Probe: EX3DV4 - SN3971; ConvF(9.73, 9.73, 9.73); Calibrated: 2015/03/26;
- Sensor-Surface: 1.4mm (Mechanical Surface Detection)
- Electronics: DAE4 Sn1431; Calibrated: 2015/03/20
- Phantom: ELI Phantom_1245; Type: QDOVA;
- Measurement SW: DASY52, Version 52.8 (8); SEMCAD X Version 14.6.10 (7331)

- Area Scan (101x141x1): Interpolated grid: dx=1.500 mm, dy=1.500 mm
Maximum value of SAR (interpolated) = 0.525 W/kg

- Zoom Scan (5x5x7)/Cube 0: Measurement grid: dx=8mm, dy=8mm, dz=5mm
Reference Value = 9.671 V/m; Power Drift = -0.10 dB
Peak SAR (extrapolated) = 0.695 W/kg
SAR(1 g) = 0.452 W/kg; SAR(10 g) = 0.299 W/kg
Maximum value of SAR (measured) = 0.605 W/kg

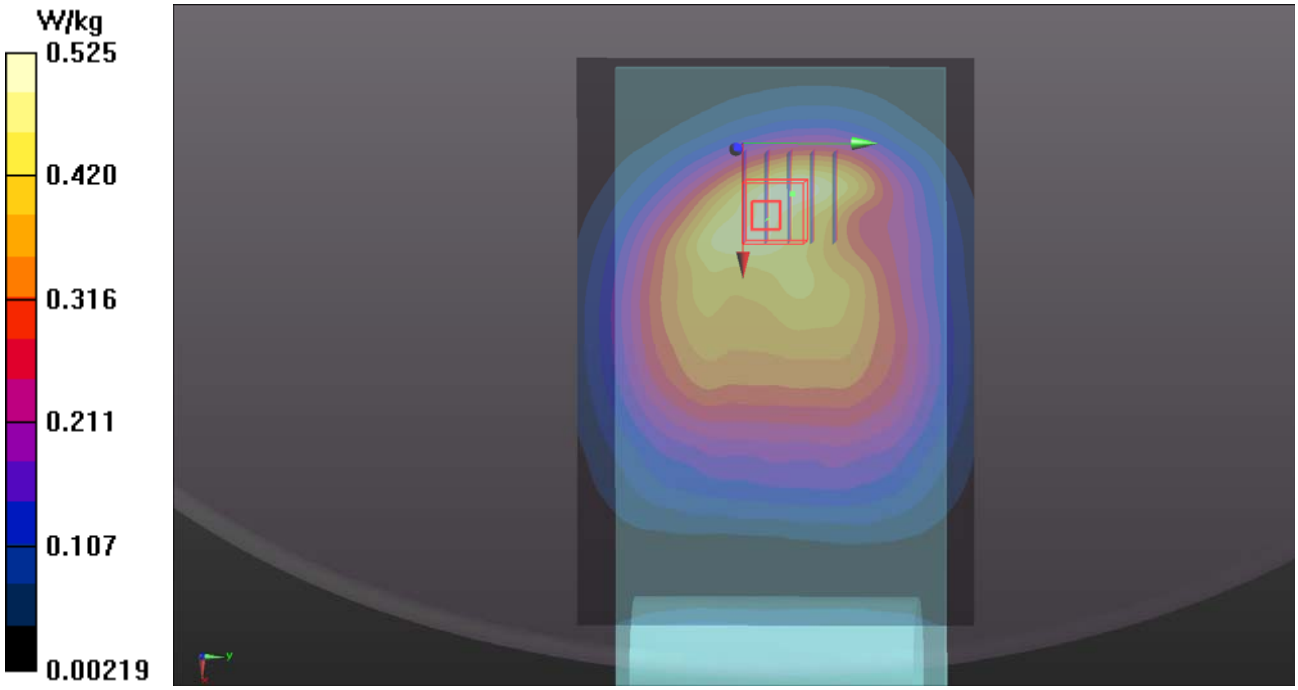

P05 2.4G WLAN_802.11b_Right Side_0cm_Ch6

DUT: 150722C10

Communication System: WLAN_2.4G; Frequency: 2437 MHz;Duty Cycle: 1:1
Medium: B19T27N3_0818 Medium parameters used : f = 2437 MHz; σ = 2.008 S/m; ε_r = 50.955; ρ = 1000 kg/m^3
Ambient Temperature：23.5 ℃； Liquid Temperature：22.8 ℃

DASY5 Configuration:
- Probe: EX3DV4 - SN3971; ConvF(7.12, 7.12, 7.12); Calibrated: 2015/03/26;
- Sensor-Surface: 1.4mm (Mechanical Surface Detection)
- Electronics: DAE4 Sn1431; Calibrated: 2015/03/20
- Phantom: ELI Phantom_1206; Type: QDOVA;
- Measurement SW: DASY52, Version 52.8 (8); SEMCAD X Version 14.6.10 (7331)

- Area Scan (221x141x1): Interpolated grid: dx=1.200 mm, dy=1.200 mm
Maximum value of SAR (interpolated) = 1.19 W/kg

- Zoom Scan (5x5x7)/Cube 0: Measurement grid: dx=8mm, dy=8mm, dz=5mm
Reference Value = 0 V/m; Power Drift = 0.01 dB
Peak SAR (extrapolated) = 2.13 W/kg
SAR(1 g) = 0.75 W/kg; SAR(10 g) = 0.263 W/kg
Maximum value of SAR (measured) = 1.40 W/kg

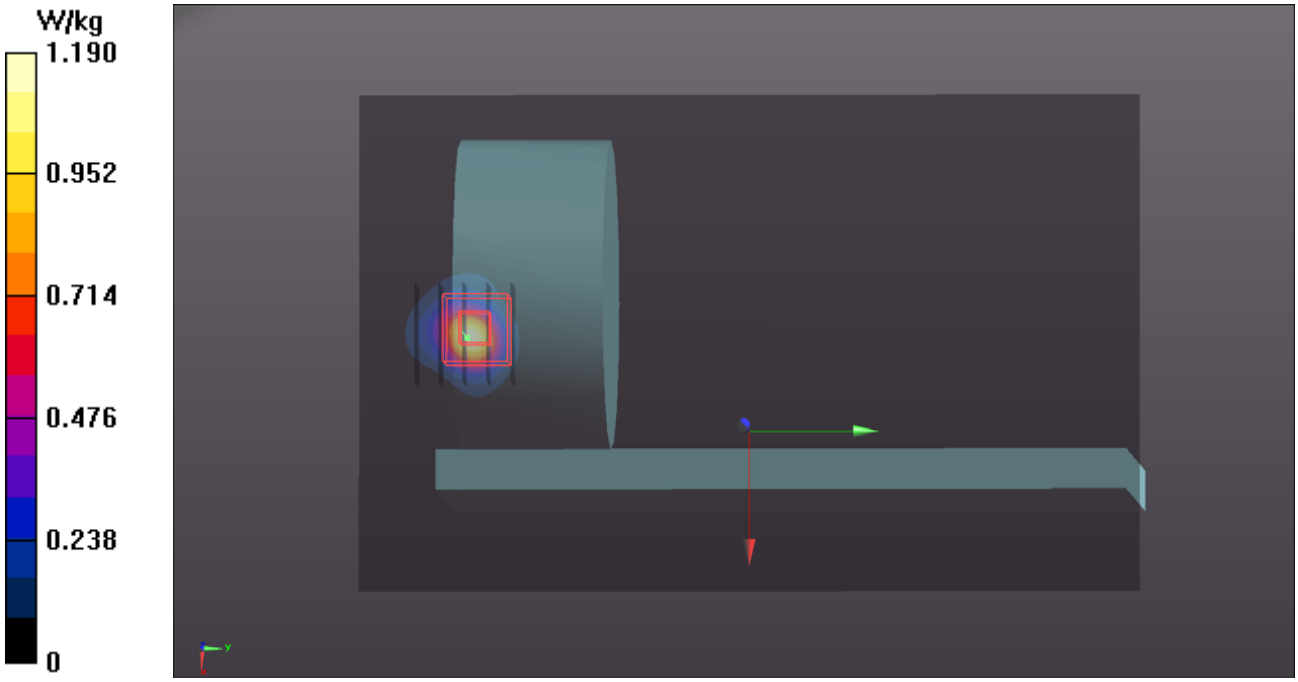

P06 5.3G WLAN_802.11a_Right Side_0cm_Ch60

DUT: 150722C10

Communication System: WLAN_5G; Frequency: 5300 MHz;Duty Cycle: 1:1
Medium: B34T60N1_0817 Medium parameters used: f = 5300 MHz; σ = 5.316 S/m; ε_r = 50.949; ρ = 1000 kg/m^3
Ambient Temperature：23.7 ℃； Liquid Temperature：22.8 ℃

DASY5 Configuration:
- Probe: EX3DV4 - SN3650; ConvF(4.64, 4.64, 4.64); Calibrated: 2015/07/23;
- Sensor-Surface: 1.4mm (Mechanical Surface Detection)
- Electronics: DAE4 Sn1277; Calibrated: 2015/07/22
- Phantom: ELI Phantom_1204; Type: QDOVA;
- Measurement SW: DASY52, Version 52.8 (8); SEMCAD X Version 14.6.10 (7331)

- Area Scan (201x261x1): Interpolated grid: dx=1.000 mm, dy=1.000 mm
Maximum value of SAR (interpolated) = 1.14 W/kg

- Zoom Scan (6x6x12)/Cube 0: Measurement grid: dx=5mm, dy=5mm, dz=2mm
Reference Value = 0 V/m; Power Drift = 0.00 dB
Peak SAR (extrapolated) = 2.25 W/kg
SAR(1 g) = 0.536 W/kg; SAR(10 g) = 0.157 W/kg
Maximum value of SAR (measured) = 1.23 W/kg

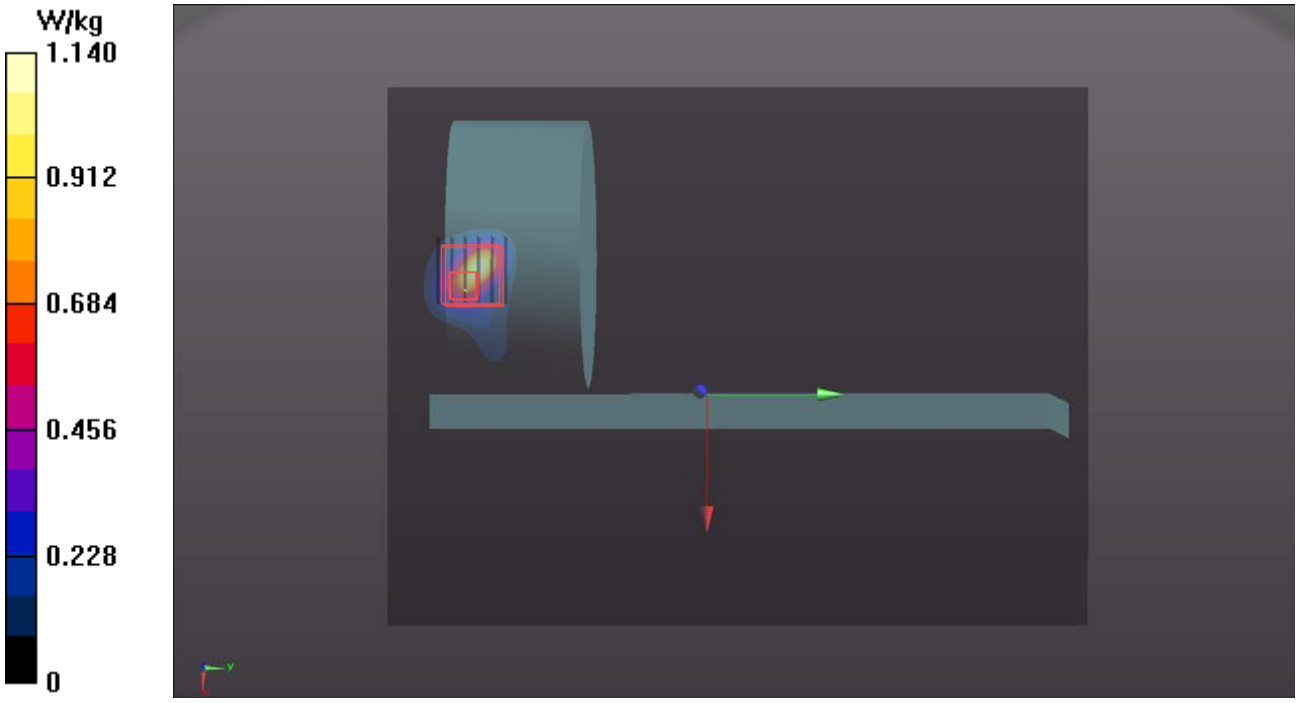

P07 5.6G WLAN_802.11a_Right Side_0cm_Ch116

DUT: 150722C10

Communication System: WLAN_5G; Frequency: 5580 MHz;Duty Cycle: 1:1
Medium: B34T60N1_0817 Medium parameters used: f = 5580 MHz; σ = 5.789 S/m; ε_r = 50.419; ρ = 1000 kg/m^3
Ambient Temperature：23.8 ℃; Liquid Temperature：22.8 ℃

DASY5 Configuration:
- Probe: EX3DV4 - SN3650; ConvF(4.05, 4.05, 4.05); Calibrated: 2015/07/23;
- Sensor-Surface: 1.4mm (Mechanical Surface Detection)
- Electronics: DAE4 Sn1277; Calibrated: 2015/07/22
- Phantom: ELI Phantom_1204; Type: QDOVA;
- Measurement SW: DASY52, Version 52.8 (8); SEMCAD X Version 14.6.10 (7331)

- Area Scan (161x261x1): Interpolated grid: dx=1.000 mm, dy=1.000 mm
Maximum value of SAR (interpolated) = 1.82 W/kg

- Zoom Scan (6x6x12)/Cube 0: Measurement grid: dx=5mm, dy=5mm, dz=2mm
Reference Value = 0.9520 V/m; Power Drift = -0.13 dB
Peak SAR (extrapolated) = 2.96 W/kg
SAR(1 g) = 0.710 W/kg; SAR(10 g) = 0.227 W/kg
Maximum value of SAR (measured) = 1.59 W/kg

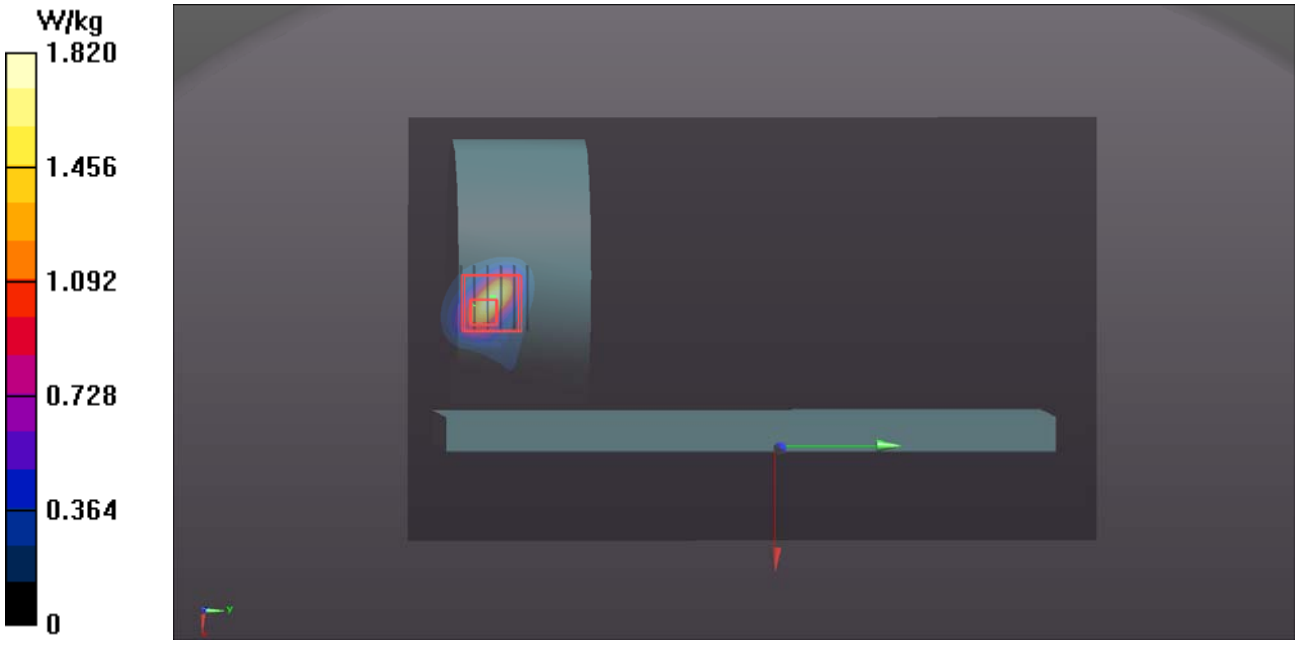

P08 5.8G WLAN_802.11a_Right Side_0cm_Ch157

DUT: 150722C10

Communication System: WLAN_5G; Frequency: 5785 MHz;Duty Cycle: 1:1
Medium: B34T60N1_0817 Medium parameters used: f = 5785 MHz; σ = 6.097 S/m; ε_r = 49.941; ρ = 1000 kg/m^3
Ambient Temperature：23.7 ℃； Liquid Temperature：22.8 ℃

DASY5 Configuration:
- Probe: EX3DV4 - SN3650; ConvF(4.45, 4.45, 4.45); Calibrated: 2015/07/23;
- Sensor-Surface: 1.4mm (Mechanical Surface Detection)
- Electronics: DAE4 Sn1277; Calibrated: 2015/07/22
- Phantom: ELI Phantom_1204; Type: QDOVA;
- Measurement SW: DASY52, Version 52.8 (8); SEMCAD X Version 14.6.10 (7331)

- Area Scan (161x261x1): Interpolated grid: dx=1.000 mm, dy=1.000 mm
Maximum value of SAR (interpolated) = 1.47 W/kg
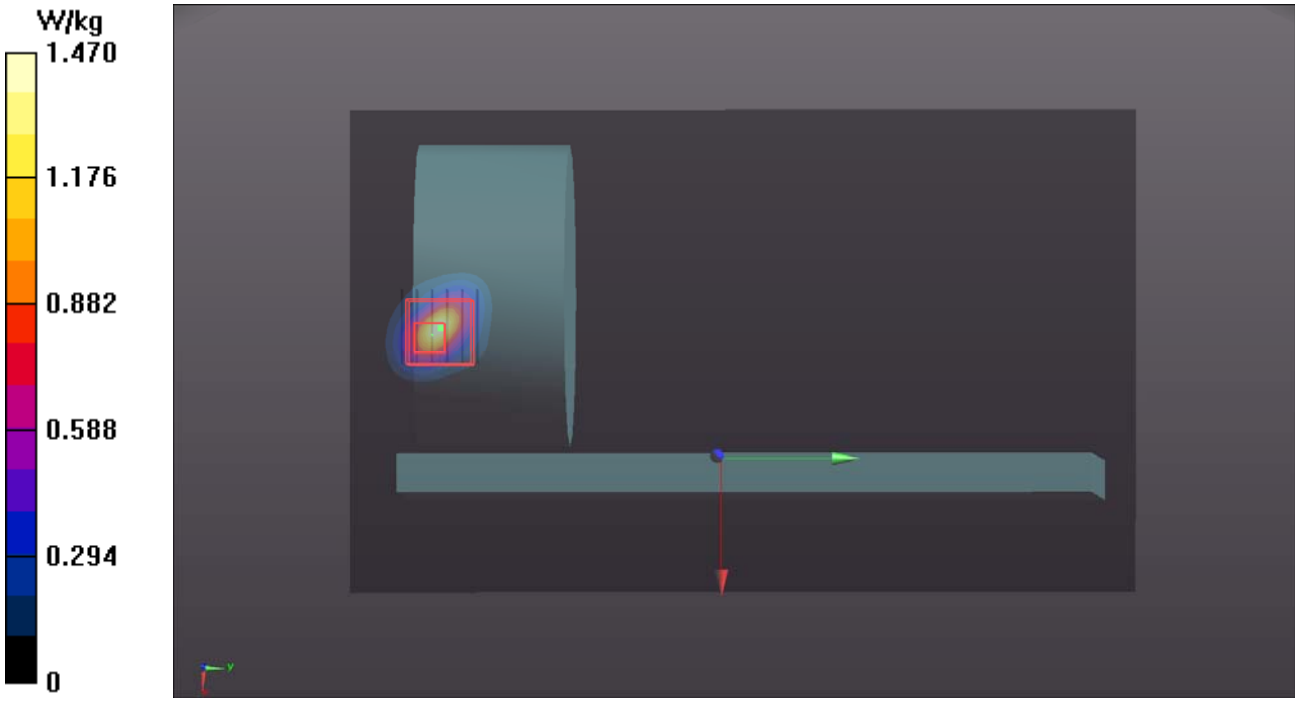
- Zoom Scan (6x6x12)/Cube 0: Measurement grid: dx=5mm, dy=5mm, dz=2mm
Reference Value = 0.5630 V/m; Power Drift = -0.01 dB
Peak SAR (extrapolated) = 2.70 W/kg
SAR(1 g) = 0.466 W/kg; SAR(10 g) = 0.143 W/kg
Maximum value of SAR (measured) = 1.19 W/kg