INOVA DAS

Bluetooth Manual

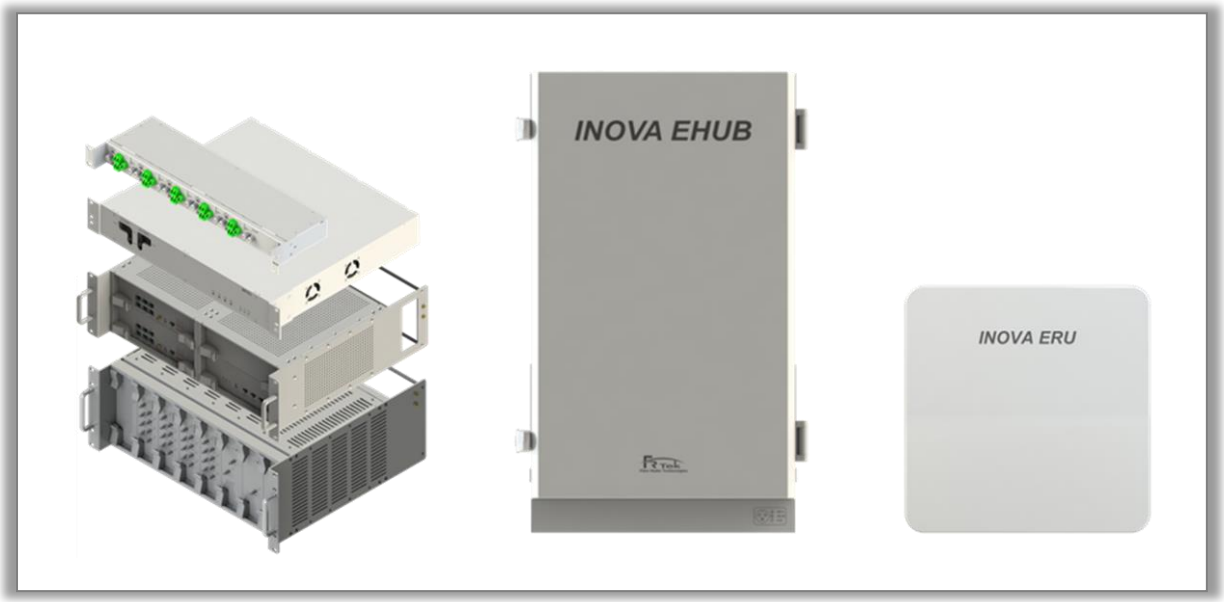

Document Reference

Company:	Fiber Radio Technologies
Version:	Ver 1.0
Document Status:	Release 1
Issue Date:	2019. 01.
Department:	R&D Group 2
Author Manager:	Jun Hyun, Lee

PRIVATE AND CONFIDENTIAL © 2019 FRTEK CO., LTD.

▪ Copyright

The copyright of this manual is from FRTek Co., Ltd.

This manual may not be reproduced, distributed, modified on any form without the consent of FRTek Co., Ltd

Unauthorized disclosure, distribution, copying or use of the information contained in this document in whole or in part without authority is strictly prohibited.

▪ Trademark

The trademarks mentioned in this manual are registered trademarks of the respective company.

Please read this service manual before installation and operation. Use the system only in accordance with contents of this manual.

- The specification and information regarding the products in this manual are subject to change due to updates to system functionality or system revision changes without notice. For the latest revision of this manual or for technical inquiries, please contact below :

Company Address : 181 Metro Drive, Suite 580, San Jose, CA 95110

Homepage : http://www.frtek.com

Contact for technical inquires or troubleshooting.

Telephone : 330-622-2911 or 510-390-1939

Revision History

Version	Issue Date	Details of Revision	Author	Authorizing Manager
V 1.0	19. 01. 02.	Original	Jun Hyun, Lee	

This manual is produced by R&D Group 2 Printed in FRTek.

PRIVATE AND CONFIDENTIAL © 2019 FRTEK CO., LTD.

Contents

Chapter 1. Safety & Certification Notice 6
1.1 FCC Warning Statements 7
1.1.1 FCC Part 15.105 statement 7
1.1.2 FCC Part 15.21 statement 7
1.1.3 FCC 15.203 Antenna requirement 20 .....
1.1.3 FCC 15.203 Antenna requirement 20 7

Chapter 2. System Overview 11
2.1 System Overview 12
2.2 System Network Configuration 12

Chapter 3. System Configuration 14
3.1 EHUB Figure and Configuration 15
3.2 ERU Figure and Configuration 16

Chapter 4. Bluetooth Connection 17

Chapter 5. System Installation 19
5.1 Tools 20
5.2 EHUB Installation 22
5.2.1 Product Installation 22
5.2.2 Ground Cable Connection 23
5.2.3 Power Cable Connection 24
5.3 ERU Installation 24
5.3.1 Product Ceiling Installation 24
5.3.2 Product Wall Installation 25

PRIVATE AND CONFIDENTIAL © 2019 FRTEK CO., LTD.

Figures

Figure 1. Basic Network Configuration. 12

Figure 2. EHUB Configuration. 15

Figure 3. ERU Configuration. 16

Figure 4. Device of control panel and printer window. .....

Figure 5. Add device window - 1.....

Figure 6. Add device window - 2.....

Figure 7. Add device window - 3.....

Figure 8. Add device window - 4.....

Figure 9. Device manager window. .....

Figure 10. Local GUI connection through Bluetooth. .....

Figure 11. EHUB Required Door Space. 22

Figure 12. EHUB Anchor Bolt Assemble. 22

Figure 13. EHUB Wall Installation Assemble. 23

Figure 14. EHUB Ground Cable Connection. 23

Figure 15. EHUB Power Cable. 24

Figure 16. ERU Ceiling Installation. 24

Figure 17. ERU Ceiling Installation Assemble. 25

Figure 18. ERU Anchor Bolt Wall Assemble. 25

Figure 19. ERU Wall Installation Assemble. 26

PRIVATE AND CONFIDENTIAL © 2019 FRTEK CO., LTD.

Chapter 1

Safety & Certification Notice

1.1 FCC & IC Warning Statements
1.2 Certification Notice

PRIVATE AND CONFIDENTIAL © 2019 FRTEK CO., LTD.

Safety & Certification Notice

1.1 FCC Warning Statements

1.1.1 FCC Part 15.105 statement

- This equipment has been tested and found to comply with the limits for a **Class A** digital device.
- These limits are designed to provide reasonable protection against harmful interference when the equipment is operated in a commercial environment.
- This equipment generates, uses, and can radiate radio frequency energy and, if not installed and used in accordance with the instruction manual, may cause harmful interference to radio communications.
- Operation of this equipment in a residential area is likely to cause harmful interference in which case the user will be required to correct the interference at his own expense.

1.1.2 FCC Part 15.21 statement

- Any changes or modifications not expressly approved by the party responsible for compliance could void the user's authority to operate this equipment

1.1.3 Healthy and SAFETY warning

- This system can be operated by approved operator only and operator should observe the warning sentence of operating manual.
- The operator who can install, operate or handle related system service should acquaint themselves this manual.
- Control and configuration of this system should be set up according to purpose of use (Refer to the manufacturer's product information), it has to be satisfied prescribed request items.
- Operator should turn off the main power switch before installing system, maintenance and related works.
- If this product is disassembled intentionally, it can bring electric shock, breakdown, malfunction

PRIVATE AND CONFIDENTIAL © 2019 FRTEK CO., LTD.

and static with losing life and property. Do not disassemble, repair and modify product.

- This system cover should be (door) securely fastened in open position, e.g. by tying it up, at outdoor work in order to prevent door from slamming due to wind causing bodily harm or damage.
- Due to power dissipation, the remote unit may reach a very high temperature. Do not operate this equipment on or close to flammable materials. Use caution when servicing the unit.
- Use this equipment only for the purpose specified by the manufacturer. Do not carry out any modifications or fit any spare parts, which are not sold or recommended by the manufacturer. This could cause fires, electric shock or other injuries.
- Read and obey all the warning labels attached to the unit. Make sure that all warning labels are kept in a legible condition.
- It is the responsibility of the network provider to implement prevention measures to avoid health hazards associated with radiation from the antenna(s) connected to the unit.
- Do not use any solvents, chemicals, or cleaning solutions containing alcohol, ammonia, or abrasives.
- Although the remote unit is internally protected against overvoltage, it is strongly recommended to ground (earth) the antenna cables close to the repeater's antenna connectors for protection against atmospheric discharge.

Warning

Obey all general and regional installation and safety regulations relating to work on high voltage installations, as well as regulations covering correct use of tools and personal protective equipment.

Warning

Laser radiation! Do not stare into the beam; do not view it directly or with optical instruments.

Please be informed that the temperature of the surface is too high. Please be careful. The label is attached to the front of the equipment and the PSU (Power Supply Unit).

PRIVATE AND CONFIDENTIAL © 2019 FRTEK CO., LTD.

- **[FCC] RF/IC Exposure Statements**

To ensure compliance with FCC and ISED RF exposure requirements this device must be installed to provide a minimum of 20cm between the antenna and people.

Pour garantir la conformité aux exigences d'exposition RF de la FCC et d' ISED Canada, cet appareil doit être installé de manière à laisser un minimum de 20 cm entre l'antenne et les personnes.

- **[IC] RSS-GEN, Sec. 8.4**

This device complies with Industry Canada licence-exempt RSS standard(s).
Operation is subject to the following two conditions: (1) this device may not cause interference, and (2) this device must accept any interference, including interference that may cause undesired operation of the device.

Le présent appareil est conforme aux CNR d'Industrie Canada applicables aux appareils radio exempts de licence.
L'exploitation est autorisée aux deux conditions suivantes : (1) l'appareil ne doit pas produire de brouillage, et (2) l'utilisateur de l'appareil doit accepter tout brouillage radioélectrique subi, même si le brouillage est susceptible d'en compromettre le fonctionnement."

PRIVATE AND CONFIDENTIAL © 2019 FRTEK CO., LTD.

Note

RESTRICTED ACCESS LOCATION: location for equipment where both of the following apply:

- access can only be gained by **SERVICE PERSIONS** or by **USERS** who have been instructed about the reason for the restrictions applied to the location and about any precautions that shall be taken; and

- access is through the use of a **TOOL** or lock and key, or other means of security, and is controlled by authority responsible for the location

PRIVATE AND CONFIDENTIAL © 2019 FRTEK CO., LTD.

Chapter 2

System Overview

2.1 System Overview
2.2 System Network

PRIVATE AND CONFIDENTIAL © 2019 FRTEK CO., LTD.

System Overview

2.1 System Overview

INOVA DAS is a system that can provide high quality telecommunication quality and data telecommunication service both in-building Also, this system is a DAS (Distributed Antenna System) system, a digital system capable of accommodating a plurality of frequency bands, available for public and private facilities.

INOVA DAS helps improve poor telecommunication in-building wireless environments. This system provides telecommunication service to every corner of the building, and allows the user to use telecommunication service regardless of the location. Also, INOVA DAS supports worldwide telecommunication standards and public interface protocols.

2.2 System Network Configuration

INOVA DAS basic network configuration for EHUB and ERU is as below picture.

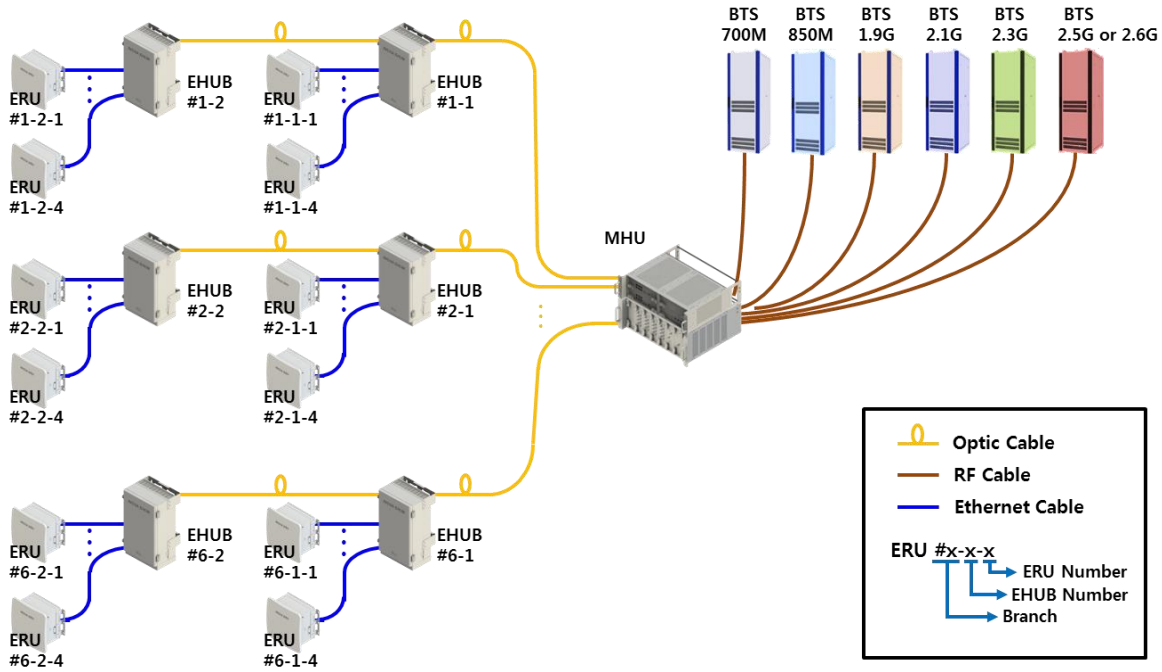

Figure 1. Basic Network Configuration.

PRIVATE AND CONFIDENTIAL © 2019 FRTEK CO., LTD.

MHU is connected to the base station with wired RF cable, and connected to the lower EHUB equipment with optic cable. EHUB is connected to ERU with wired Cat.7 cable, optic signal is converted into Ethernet signal and transmitted to ERU or the Ethernet signal is converted into optic signal and transmitted to MHU. Each branch of the MHU can each be connected cascade with 2 EHUBs for operation, EHUB can be connected up to total of 4 ERUs.

Used Abbreviations
MHU: Master Hub Unit
DAS: Distributed Antenna System
EHUB: Ethernet HUB unit
ERU: Ethernet Remote Unit
ERFU: ERU RF Unit

The EHUB has no other transmitters except for Bluetooth transmitter. The ERU has Bluetooth transmitter and can also be installed the following repeater modules (ERFUs) approved by FCC/IC below to extend wireless service for in-building and outdoor areas.

Service Band		FCC ID	IC ID	Remark
ERFU(s)	700 & 850 MHz	2AFEG-700-850-21	20471-70085021IC	
	1.9 GHz	2AFEG-1900-24	20471-190024IC	
	2.1 GHz	2AFEG-2100-24	20471-210024IC	
	2.3 & 2.5 GHz	2AFEG-23-25-21-24	N/A	
	2.3 & 2.6 GHz	N/A	20471-23262124IC	

Bluetooth transmitter into EHUB and ERU device is just operated for status monitoring and control parameters from server, software for DAS download and signal quality measurement.

There is no simultaneous transmission between Bluetooth transmitter and the repeater modules within ERU device because 'the cellular repeater signal on downlink side is NOT transmitted through Bluetooth transmitter'.

The Bluetooth specification is as follows.

- Bluetooth V 2.0 / Class 1
- Output power: 5 dBm
- Size: 27.1 X 14.8 X 2.6mm (Shield case)
- Operating Temperature: -40°c ~ +85°c

PRIVATE AND CONFIDENTIAL © 2019 FRTEK CO., LTD.

Chapter 3

System Configuration

3.1 EHUB Figure and Configuration
3.2 ERU Figure and Configuration

PRIVATE AND CONFIDENTIAL © 2019 FRTEK CO., LTD.

System Configuration

3.1 EHUB Figure and Configuration

EHUB is a structure that can be used in-building, enclosure is minimized considering installation space and operator's convenience. EHUB converts optic signal to Ethernet signal or converts Ethernet signal to optic signal

EHUB functions can be simply described as the following.

- Function to convert optic signal into RF signal, amplify and service through antenna. (Downlink)
- Function to convert RF signal into digital signal, and transmit to upper equipment. (Uplink)
- 700MHz, 850MHz, 1.9GHz, 2.1GHz, 2.3GHz, 2.5GHz or 2.6GHz service support.

Below picture shows the EHUB figure.

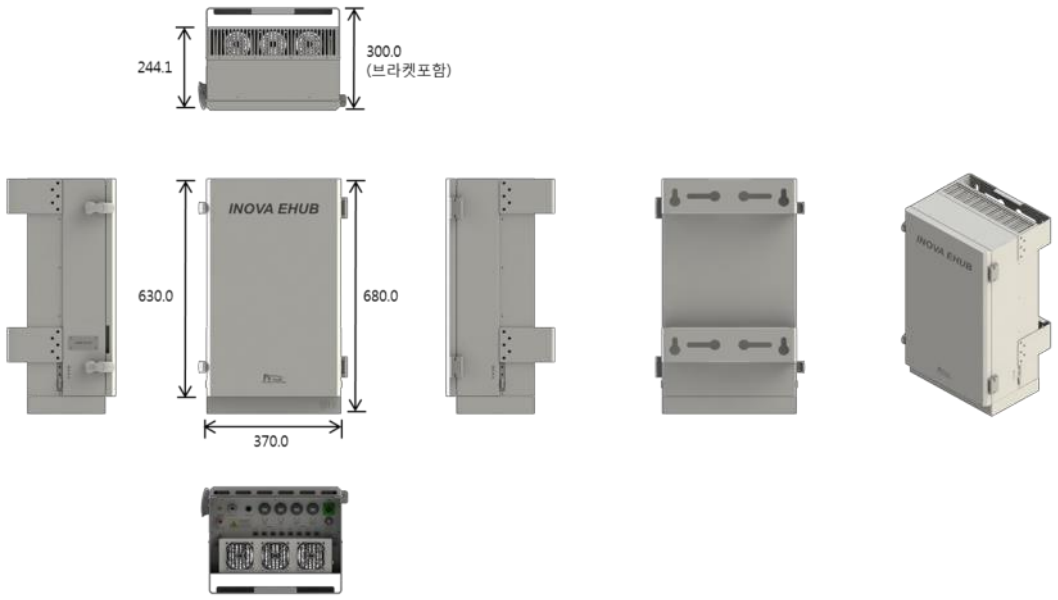

Figure 2. EHUB Configuration.

Item	Content	Remark
Size	370 * 680 * 300 (W * H * D)	Including bracket
Weight	Approx. 35kg	
Input power	AC 120V (60Hz)	
Environment	In-building type	

PRIVATE AND CONFIDENTIAL © 2019 FRTEK CO., LTD.

3.2 ERU Figure and Configuration

ERU is a structure that can be used in-building, enclosure is configured as ceiling fixed type.

ERU is configured with ERPSU, ERDTU, ERCPU, 4 ERFUs (ERU RF unit) and can support up to 6 frequency bands.

ERU functions can be explained as the following.

- Converts Ethernet signal to RF signal, amplifies and services through antenna. (Downlink)
- Converts RF signal to Ethernet signal, transmits to upper equipment. (Uplink)
- 700MHz, 850MHz, 1.9GHz, 2.1GHz, 2.3GHz, 2.5GHz or 2.6GHz service support.
- Receives power supply from EHUB through Cat.7 cable. (No separate PSU)
- Delay control function through Time Advance function.
- 1Gbps Ethernet port implementation for various use.

Below picture shows the ERU figure.

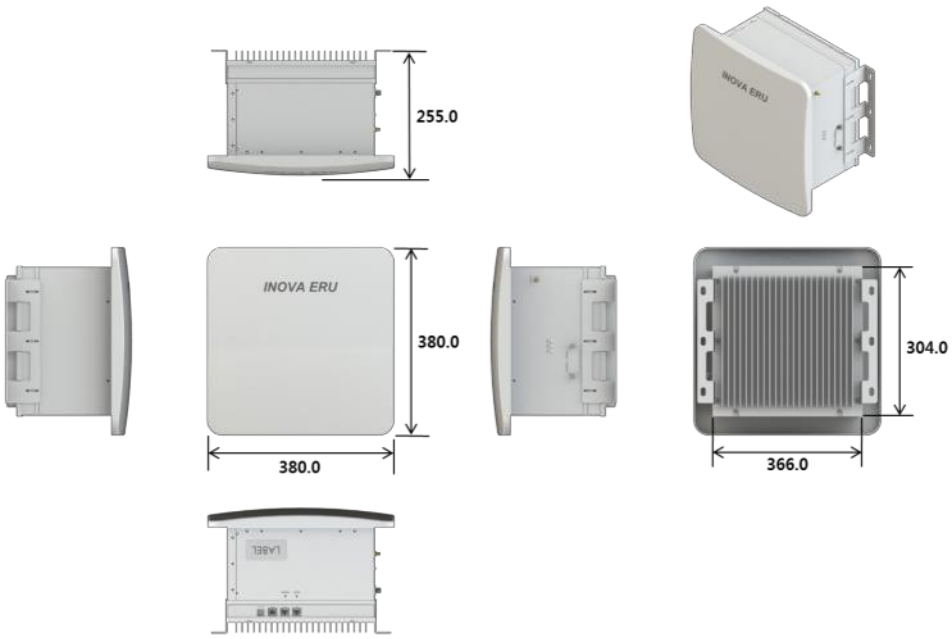

Figure 3. ERU Configuration.

Item	Content	Remark
Size	380 * 380 * 255 (W * H * D)	Including bracket
Weight	Approx. 19kg	
Input power	PoE++	No separate PSU
Environment	In-building type	

PRIVATE AND CONFIDENTIAL © 2019 FRTEK CO., LTD.

Chapter 4

Bluetooth Connection

PRIVATE AND CONFIDENTIAL © 2019 FRTEK CO., LTD.

Bluetooth Connection (GUI)

INOVA DAS is implemented with Bluetooth function for user's convenience.

The antenna is permanently connected at the factory and is shipped with the INOVA DAS.

GUI access is available remotely through Bluetooth.

Turn on the ROU power. Then go to the control panel - hardware and sound - device and printer window, click right button of the mouse and click the add device button.

In the list of devices to be added, the Bluetooth module available for connection will be searched. As the picture above, select the I-STORM module from the list. The Bluetooth name can be changed by setting, if the device cannot be searched, recheck the connection between the Bluetooth and the Main Board.

Click on 'enter the device connection code' item. Then input the device connection code.

(Default : 1234)

When the device connection code has been correctly input, window will show as the above picture. When the window appears, click the 'close' button.

Open the Device manager window, and check if 2 new Comports are added in the PC. Normally it would take 10~15 seconds to confirm. Also, the Comport number will be set randomly.

Access the Local GUI, and check the Comport assigned to the Bluetooth. Select the faster number of the Comport number and access to GUI. (If there are COM23 and COM24, then select COM23.)

PRIVATE AND CONFIDENTIAL © 2019 FRTEK CO., LTD.

Chapter 5

System Installation

5.1 Tools

5.2 EHUB Installation

5.3 ERU Installation

PRIVATE AND CONFIDENTIAL © 2019 FRTEK CO., LTD.

System Installation

"This manual is to provide product installation method and product information to the user operating the INOVA DAS system, the repeater manager who uses the operation manual needs to require professional knowledge and experience on construction operation of repeater systems. "

This chapter explains how to connect power cables and how to install each equipment and optic cable. It specifically describes MHU(MWDM, MPSU, MDRU, MBIU), EHUB, ERU installation method and cable connecting method.

5.1 Tools

Tools needed for installation are as below.

No.	Tools	No.	Tools
1	ESD Gloves	2	Torque Wrench Set
3	33mm Torque Wrench	4	+, 3Φ Screw Driver
5	Wire Stripper	6	Wire Cutter
7	Rubber Mallet	8	Digital Multi-meter

PRIVATE AND CONFIDENTIAL © 2019 FRTEK CO., LTD.

Other cables and components needed for installation are as below.

No.	Tools	No.	Tools
1	AC Cable	2	INOVA Harness Cable
3	INOVA RF Cable	4	Ground Wire Line
5	Optic Connector Cleaner	6	LC-type Optic Fiber
7	Optic Module	8	SMA Cable
9	ANT RF Cable	10	Bracket Bolt/Nut
11	UTP Cable		

PRIVATE AND CONFIDENTIAL © 2019 FRTEK CO., LTD.

5.2 EHUB Installation

5.2.1 Product Installation

EHUB is configured to one enclosure, can be installed to wall through mounting bracket

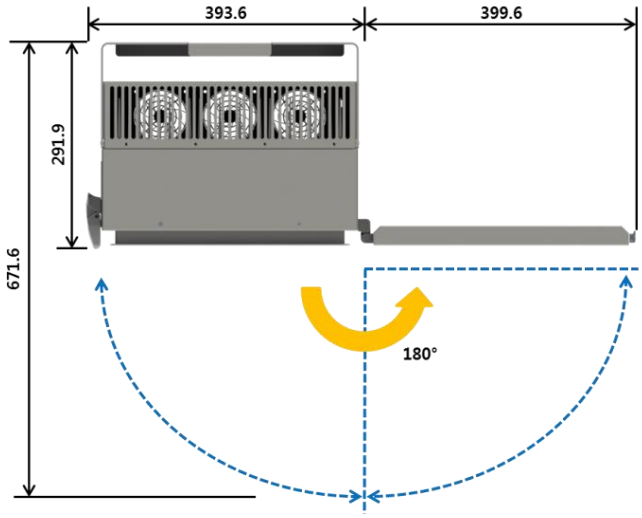

Figure 4. EHUB Required Door Space.

Since EHUB is configured with door, for ease of process, 400mm space on the equipment right side must be secured, and more than 672mm installation space is needed from installation wall.

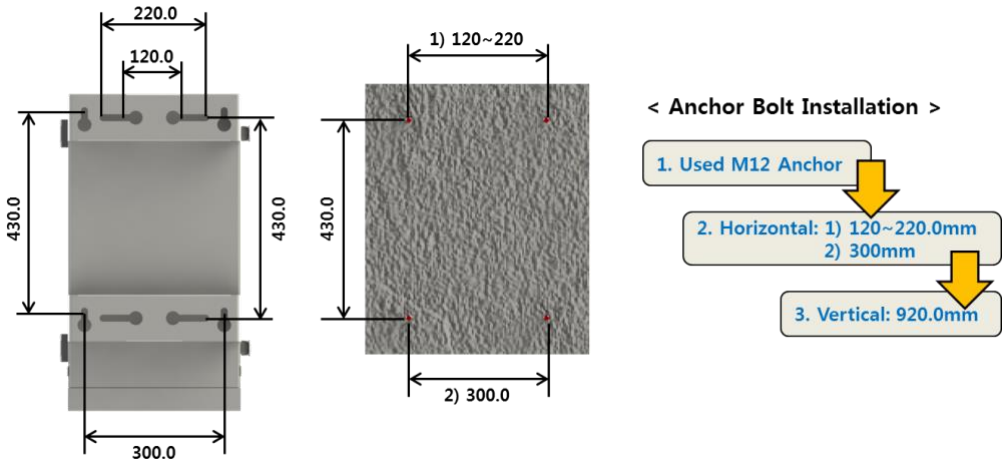

Figure 5. EHUB Anchor Bolt Assemble.

Above figure is a simple drawing for the wall face. For wall installation of EHUB, use anchor bolt to fix.

PRIVATE AND CONFIDENTIAL © 2019 FRTEK CO., LTD.

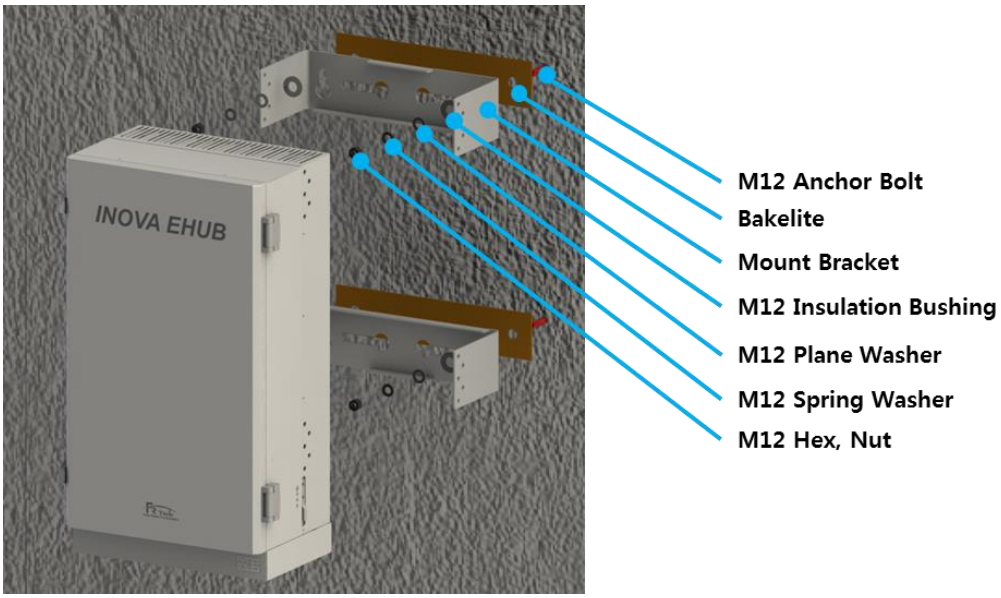

Figure 6. EHUB Wall Installation Assemble.

Above figure is the assemble drawing of EHUB wall installation. The assemble orders are as below.

1. Insert bakelite to M16 Anchor Bolt, and locate EHUB according to M16 Anchor Bolt location.
2. Insert M16 Insulation Bushing, M16 Plane Washer, and M16 Spring Washer.
3. Tighten M16 Hex, Nut using spanner.

5.2.2 Ground Cable Connection

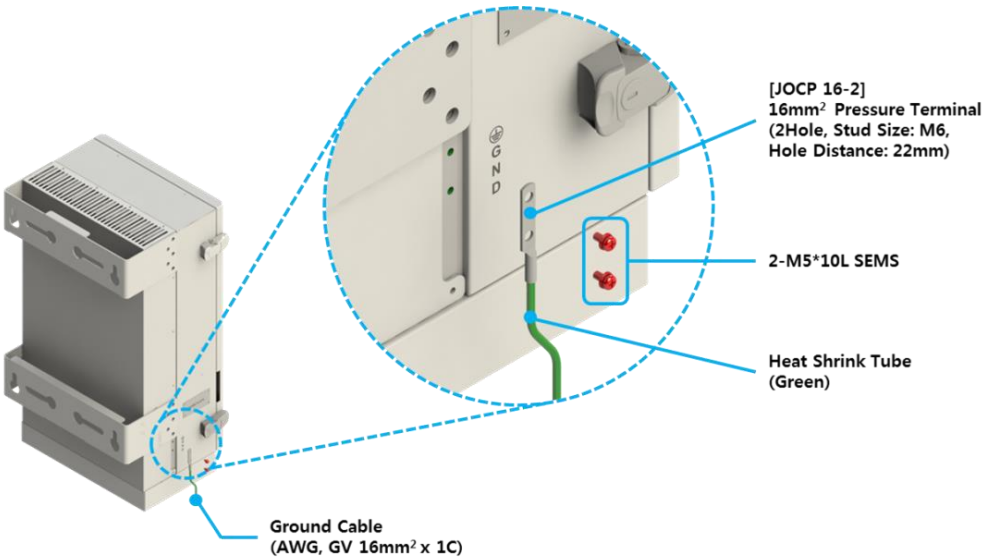

Figure 7. EHUB Ground Cable Connection.

PRIVATE AND CONFIDENTIAL © 2019 FRTEK CO., LTD.

Enclosure grounding and building grounding is connected in order to stable and protect EHUB equipment from electrical danger.

5.2.3 Power Cable Connection

EHUB uses AC120V(60Hz) as main power, and power cable includes plug. Below is the pin specification of AC power cable, when connecting power, polarity of each pin must be checked.

MS Connector	Pin Name	Name	Description	Length(mm)
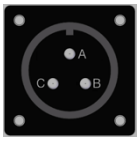	A	AC_H	AC Hot	1800
	B	AC-N	AC Neutral	1800
	C	F.G	Frame Ground	1800

Figure 8. EHUB Power Cable.

5.3 ERU Installation

5.3.1 Product Ceiling Installation

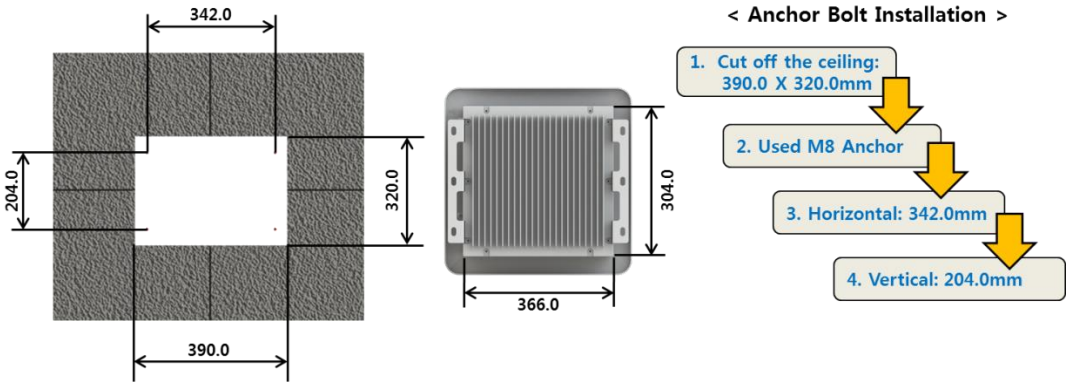

Figure 9. ERU Ceiling Installation.

ERU can be installed on the ceiling through mount bracket. Above figure is a simplified drawing of the ceiling. Us anchor bolt to fix ERU for ceiling installation.

PRIVATE AND CONFIDENTIAL © 2019 FRTEK CO., LTD.

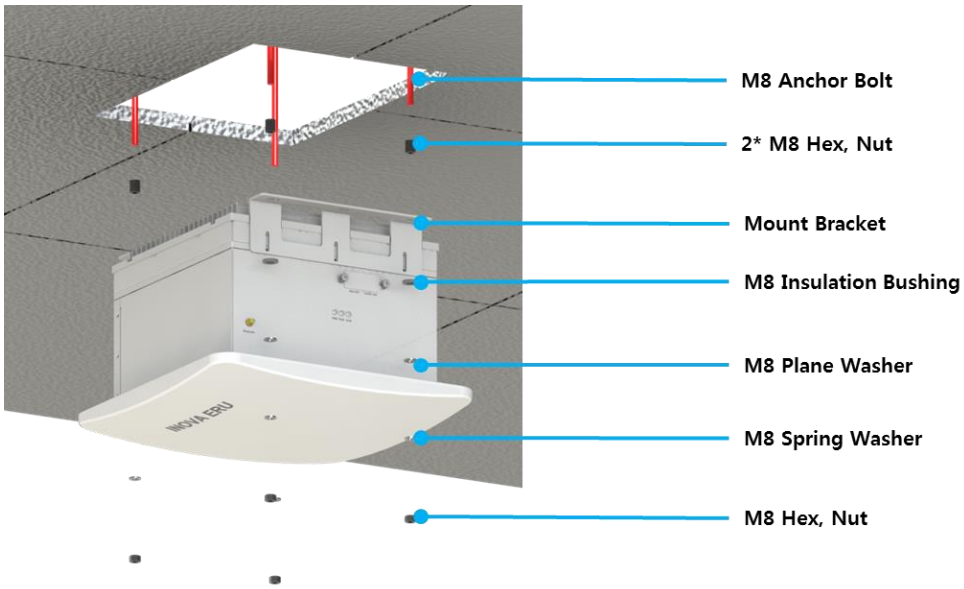

Figure 10. ERU Ceiling Installation Assemble.

Above figure is the assemble drawing of EHUB ceiling installation. The assemble orders are as below.

1. Insert bakelite to M8 Anchor Bolt, and locate ERU according to M8 Anchor Bolt location.
2. Insert M8 Insulation Bushing, M8 Plane Washer, and M8 Spring Washer.
3. Tighten M8 Hex, Nut using spanner.

5.3.2 Product Wall Installation

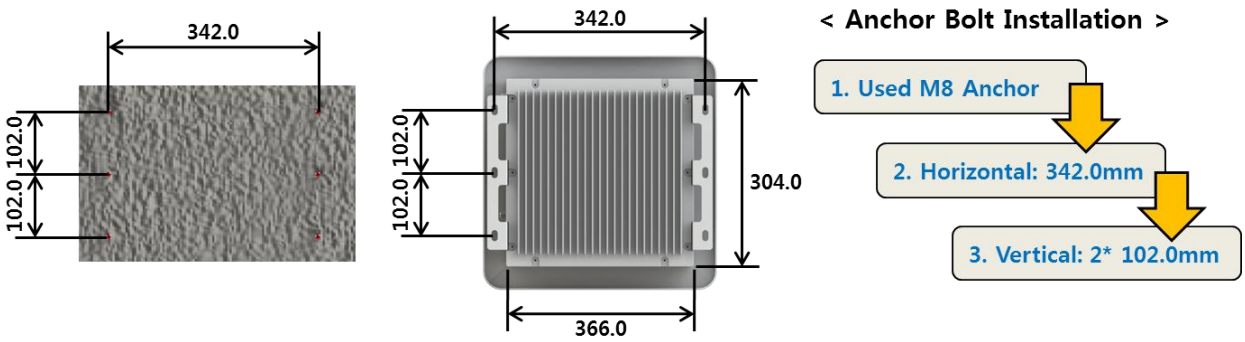

Figure 11. ERU Anchor Bolt Wall Assemble.

ERU can be installed on the wall through mount bracket. Above figure is a simplified drawing of the wall. Us anchor bolt to fix ERU for wall installation.

PRIVATE AND CONFIDENTIAL © 2019 FRTEK CO., LTD.

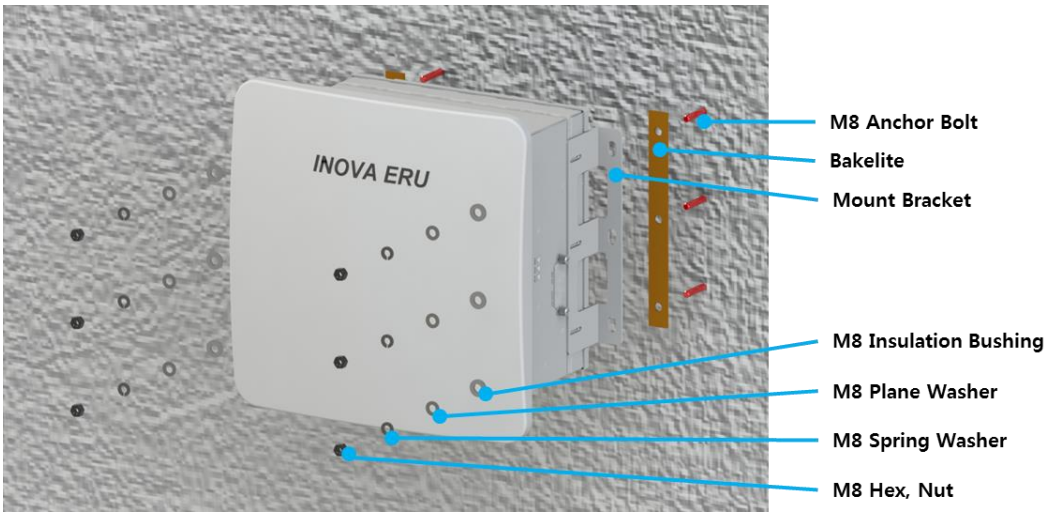

Figure 12. ERU Wall Installation Assemble.

Above figure is the assemble drawing of ERU wall installation. The assemble orders are as below.

1. Insert bakelite to M8 Anchor Bolt, and locate ERU according to M8 Anchor Bolt location.
2. Insert M8 Insulation Bushing, M8 Plane Washer, and M8 Spring Washer.
3. Tighten M8 Hex, Nut using spanner.

PRIVATE AND CONFIDENTIAL © 2019 FRTEK CO., LTD.

INOVA DAS

Bluetooth Manual

Fiber Radio Technologies CO., LTD.
All rights reserved.

- Copyright ⓒ FRTek Co., Ltd. All rights reserved.
- Without any authorization of FRTek Co., Ltd., the disclosure, distribution, reproduction and reuse of all or part of the information in this manual to the 3rd party are strictly prohibited

.