INOVA DAS

Operating Manual

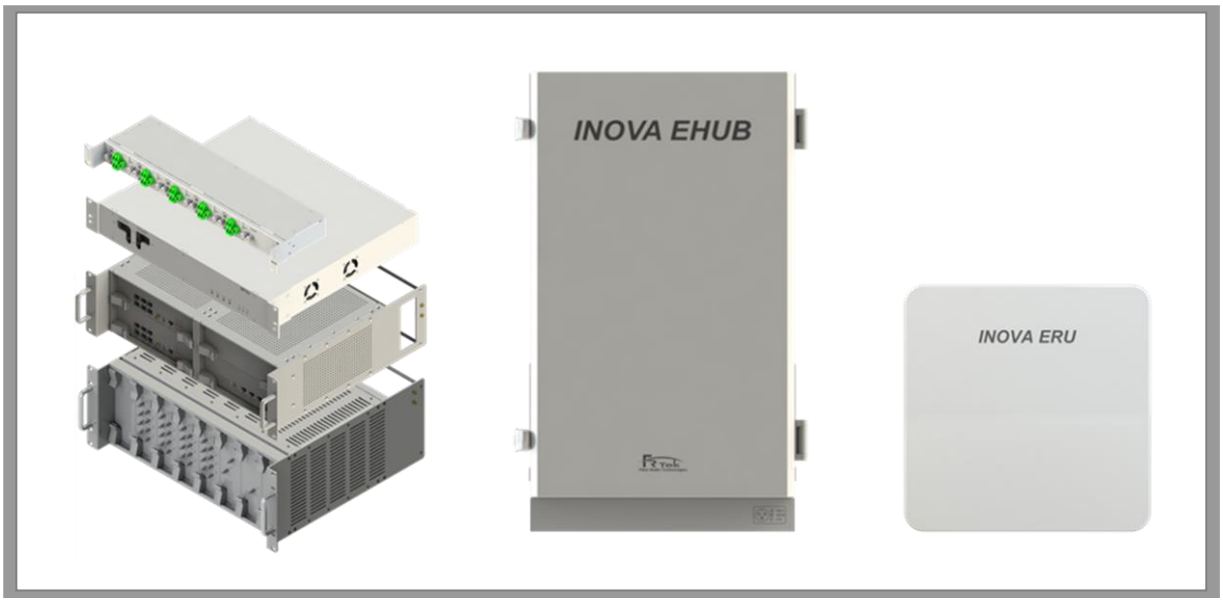

Document Reference

Company:	Fiber Radio Technologies
Version:	Ver 1.1
Document Status:	Release 1
Issue Date:	2019. 03.
Department:	R&D Group 2
Author Manager:	Jun Hyun, Lee

PRIVATE AND CONFIDENTIAL © 2019 FRTEK CO., LTD.

▪ Copyright

The copyright of this manual is from FRTek Co., Ltd.

This manual may not be reproduced, distributed, modified on any form without the consent of FRTek Co., Ltd

Unauthorized disclosure, distribution, copying or use of the information contained in this document in whole or in part without authority is strictly prohibited.

▪ Trademark

The trademarks mentioned in this manual are registered trademarks of the respective company.

Please read this service manual before installation and operation. Use the system only in accordance with contents of this manual.

- The specification and information regarding the products in this manual are subject to change due to updates to system functionality or system revision changes without notice. For the latest revision of this manual or for technical inquiries, please contact below :

Company Address : 181 Metro Drive, Suite 580, San Jose, CA 95110

Homepage : http://www.frtek.com

Contact for technical inquires or troubleshooting.

Telephone : 330-622-2911 or 510-390-1939

Revision History

Version	Issue Date	Details of Revision	Author	Authorizing Manager
V 1.0	19. 01. 02.	Original	Jun Hyun, Lee	
V 1.1	19. 03. 29.	Original	Jun Hyun, Lee	

This manual is produced by R&D Group 2 Printed in FRTek.

PRIVATE AND CONFIDENTIAL © 2019 FRTEK CO., LTD.

Contents

Chapter 1. Safety & Certification Notice 8
1.1 FCC/IC Warning Statements 9
1.1.1 FCC Part 15.105 statement 9
1.1.2 FCC Part 15.21 statement 9
1.1.3 Health and Safety Warnings 9
1.1.4 RSS-GEN, Sec. 7.1.2 – (transmitters) 10
1.1.5 RSS-GEN, Sec. 7.1.2 – (detachable antennas) 10
1.1.6 RF Radiation Exposure 11
1.2 Certification Notice 13

Chapter 2. System Overview 15
2.1 System Overview 16
2.1.1 Overview 16
2.1.2 INOVA DAS Design Considerations 17
2.2 System Network Configuration 19

Chapter 3. System Configuration 21
3.1 ERU Figure and Configuration 22

Chapter 4. System Specification 24
4.1 System Specification 25
4.1.1 System Specification per Frequency Band – 700MHz 25
4.1.2 System Specification per Frequency Band – 850MHz 26
4.1.3 System Specification per Frequency Band – 1.9GHz 27
4.1.4 System Specification per Frequency Band – 2.1GHz 28
4.1.5 System Specification per Frequency Band – 2.3GHz 29
4.1.6 System Specification per Frequency Band – 2.5GHz 29
4.1.7 System Specification per Frequency Band – 2.6GHz 30
4.2 Organization Specification 31

PRIVATE AND CONFIDENTIAL © 2019 FRTEK CO., LTD.

4.2.1 Structure and Type 31
4.2.2 Manufacturing and Processing 32
4.2.3 Materials and Components 32
4.3 Electrical Specification 33
4.4 Environmental Specification 33

Chapter 5. System Installation 35
5.1 Tools 36
5.2 ERU Installation 38
5.2.1 Product Ceiling Installation 38
5.2.2 Product Wall Installation 39
5.2.3 Antenna Connection 40
5.3 2.5GHz, 2.6GHz Setting Method 40

Chapter 6. Local GUI(Graphical User Interface) 42
6.1 Local GUI Main Screen 43
6.2 Local GUI ERU Screen 47
6.2.1 ERU Main Screen 47
6.2.2 ERU Main Screen per Frequency 49

Chapter 7. Alarm and Corrective Action 57
7.1 Alarm Phenomenon and Solution 58

PRIVATE AND CONFIDENTIAL © 2019 FRTEK CO., LTD.

Figures

Figure 1. Basic Network Configuration. 19
Figure 2. Extended Network Configuration. 20
Figure 3. ERU Configuration 22
Figure 4. ERU Port Configuration. 23
Figure 5. ERU Ceiling Installation. 38
Figure 6. ERU Ceiling Installation Assemble. 38
Figure 7. ERU Anchor Bolt Wall Assemble. 39
Figure 8. ERU Wall Installation Assemble. 39
Figure 9. ERU Antenna Connection. 40
Figure 10. For 2.5GHz Service, Insert 2.5GHz MRFU/ERFU/Multiplexer Module. 41
Figure 11. For 2.6GHz Service, Insert 2.6GHz MRFU/ERFU/Multiplexer Module. 41
Figure 12. Local GUI Initial Screen. 43
Figure 13. Local GUI Main Screen. 44
Figure 14. Spectrum Analyzer Window Screen. 45
Figure 15. Time Advance Window Screen. 46
Figure 16. Reset Window Screen. 46
Figure 17. Download Window Screen. 46
Figure 18. Local GUI ERU Screen. 47
Figure 19. ERU PIMD Screen. 48
Figure 20. 700MHz ERU Band Information Screen 49
Figure 21. 850MHz ERU Band Information Screen 50
Figure 22. 1.9GHz ERU Band Information Screen. 51
Figure 23. 2.1GHz ERU Band Information Screen. 52
Figure 24. 2.3GHz ERU Band Information Screen. 53
Figure 25. 2.5GHz ERU Band Information Screen. 54
Figure 26. 2.6GHz ERU Band Information Screen. 55

PRIVATE AND CONFIDENTIAL © 2019 FRTEK CO., LTD.

Used Abbreviations

DAS	**D**istributed **A**ntenna **S**ystem
EMS	**E**lement **M**anagement **S**ystem
MHU	**M**aster **H**ub **U**nit
EHUB	**E**thernet **HUB** unit
ERU	**E**thernet **R**emote **U**nit
PSU	**P**ower **S**upply **U**nit
ERFU	**E**RU **RF U**nit
SFP	The **S**mall form-**F**actor **P**luggable
GUI	**G**raphical **U**ser **I**nterface
SISO	**S**ingle **I**nput **S**ingle **O**utput
SMR	**S**pecialized **M**obile **R**adio
TBD	**T**o **B**e **D**etermined
USB	**U**niversal **S**erial **B**us
VSWR	**V**oltage **S**tanding **W**ave **R**atio
ACLR	**A**djacent **C**hannel **L**eakage Power **R**atio
ALC	**A**uto **L**evel **C**ontrol
EVM	**E**rror **V**ector **M**agnitude
3GPP	**3**rd **G**eneration **P**artnership **P**roject

PRIVATE AND CONFIDENTIAL © 2019 FRTEK CO., LTD.

Chapter 1

Safety & Certification Notice

1.1 FCC/IC Warning Statements
1.2 Certification Notice

PRIVATE AND CONFIDENTIAL © 2019 FRTEK CO., LTD.

Safety & Certification Notice

1.1 FCC/IC Warning Statements

1.1.1 FCC Part 15.105 statement

This equipment has been tested and found to comply with the limits for a Class A digital device, pursuant to part 15 of the FCC Rules. These limits are designed to provide reasonable protection against harmful interference when the equipment is operated in a commercial environment. This equipment generates, uses, and can radiate radio frequency energy and, if not installed and used in accordance with the instruction manual, may cause harmful interference to radio communications. Operation of this equipment in a residential area is likely to cause harmful interference in which case the user will be required to correct the interference at his own expense.

1.1.2 FCC Part 15.21 statement

Any changes or modifications not expressly approved by the party responsible for compliance could void the user's authority to operate this equipment

1.1.3 Health and Safety Warnings

- This system can be operated by approved operator only and operator should observe the warning sentence of operating manual.
- The operator who can install, operate or handle related system service should acquaint themselves this manual.
- Control and configuration of this system should be set up according to purpose of use (Refer to the manufacturer's product information), it has to be satisfied prescribed request items.
- Operator should turn off the main power switch before installing system, maintenance and related works.
- If this product is disassembled intentionally, it can bring electric shock, breakdown, malfunction and static with losing life and property. Do not disassemble, repair and modify product.
- This system cover should be (door) securely fastened in open position, e.g. by tying it up, at outdoor work in order to prevent door from slamming due to wind causing bodily harm or damage.

PRIVATE AND CONFIDENTIAL © 2019 FRTEK CO., LTD.

- Due to power dissipation, the remote unit may reach a very high temperature. Do not operate this equipment on or close to flammable materials. Use caution when servicing the unit.
- Use this equipment only for the purpose specified by the manufacturer. Do not carry out any modifications or fit any spare parts, which are not sold or recommended by the manufacturer. This could cause fires, electric shock or other injuries.
- Read and obey all the warning labels attached to the unit. Make sure that all warning labels are kept in a legible condition.
- It is the responsibility of the network provider to implement prevention measures to avoid health hazards associated with radiation from the antenna(s) connected to the unit.
- Do not use any solvents, chemicals, or cleaning solutions containing alcohol, ammonia, or abrasives.
- Although the remote unit is internally protected against overvoltage, it is strongly recommended to ground (earth) the antenna cables close to the repeater's antenna connectors for protection against atmospheric discharge.
- Antenna(s) must be installed such that a minimum separation distance of at least **20cm** is maintained between the radiator (antenna) and all persons at all times. This device must not be co-located or operating in conjunction with any other antenna or transmitter.

1.1.4 RSS-GEN, Sec. 7.1.2 – (transmitters)

Under Industry Canada regulations, this radio transmitter may only operate using an antenna of a type and maximum (or lesser) gain approved for the transmitter by Industry Canada. To reduce potential radio interference to other users, the antenna type and its gain should be so chosen that the equivalent isotropically radiated power (e.i.r.p.) is not more than that necessary for successful communication.

Conformément à la réglementation d'Industrie Canada, le présent émetteur radio peut fonctionneravec une antenne d'un type et d'un gain maximal (ou inférieur) approuvé pour l'émetteur par Industrie Canada. Dans le but de réduire les risques de brouillage radioélectrique à l'intention desautres utilisateurs, il faut choisir le type d'antenne et son gain de sorte que la puissance isotroperayonnée quivalente (p.i.r.e.) ne dépassepas l'intensité nécessaire à l'établissement d'une communication satisfaisante.

1.1.5 RSS-GEN, Sec. 7.1.2 – (detachable antennas)

PRIVATE AND CONFIDENTIAL © 2019 FRTEK CO., LTD.

This radio transmitter (identify the device by certification number, or model number if Category II)has been approved by Industry Canada to operate with the antenna types listed below with the maximum permissible gain and required antenna impedance for each antenna type indicated. Antenna types not included in this list, having a gain greater than the maximum gain indicated for that type, are strictly prohibited for use with this device.

Le présent émetteur radio (identifier le dispositif par son numéro de certification ou son numéro de modèle s'il fait partie du matériel de catégorie I) a été approuvé par Industrie Canada pour fonctionner avec les types d'antenne énumérés ci-dessous et ayant un gain admissible maximal et l'impédance requise pour chaque type d'antenne. Les types d'antenne non inclus dans cette liste,ou dont le gain est supérieur au gain maximal indiqué, sont strictement interdits pour l'exploitation de l'émetteur.

1.1.6 RF Radiation Exposure

This equipment complies with RF radiation exposure limits set forth for an uncontrolled environment. This equipment should be installed and operated with a minimum distance of 20 cm between the radiator and your body. This transmitter must not be co-located or operating in conjunction with any other antenna or transmitter. RF exposure will be addressed at time of installation and the use of higher gain antennas require larger separation distances.

L'antenne (ou les antennes) doit être installée de façon à maintenir à tout instant une distance minimum de au moins 20 cm entre la source de radiation (l'antenne) et toute personne physique. Cet appareil ne doit pas être installé ou utilisé en conjonction avec une autre antenne ou émetteur.

Warning

Obey all general and regional installation and safety regulations relating to work on high voltage installations, as well as regulations covering correct use of tools and personal protective equipment.

Warning

Use of unauthorized antennas, cables, and /or coupling devices not conforming with ERP/EIRP and /or indoor-only restrictions is prohibited.

PRIVATE AND CONFIDENTIAL © 2019 FRTEK CO., LTD.

Warning

Laser radiation! Do not stare into the beam; do not view it directly or with optical instruments.

Please be informed that the temperature of the surface is too high. Please be careful. The label is attached to the front of the equipment and the PSU (Power Supply Unit).

- **INFORMATION TO THE USER**

The head end unit must always be connected to the Base Station using a direct cabled connection. This system has not been approved for use with a wireless connection via server antenna to the base station.

When external fan installed in the bottom of the enclosure operate, please keep at regular intervals to prevent danger.
If you want to detach it, you must have access after operation of fan off.

- **[FCC] BOOSTER WARNING LABEL**

WARNING. This is **NOT** a **CONSUMER** device. It is designed for installation by **FCC LICENSEES** and **QUALIFIED INSTALLERS**. You **MUST** have an **FCC LICENSE** or express consent of an FCC License to operate this device. Unauthorized use may result in significant forfeiture penalties, including penalties in excess of $100,000 for each continuing violation.

- **[IC] BOOSTER WARNING LABEL**

WARNING: This is **NOT** a **CONSUMER** device. It is designed for installation by an installer approved by an **ISED licensee**. You **MUST** have an **ISED LICENCE** or the express consent of an ISED licensee to operate this device.

- **NOTICE**

PRIVATE AND CONFIDENTIAL © 2019 FRTEK CO., LTD.

This equipment's simple information are :

- AMP Gain : 42dB @700M, 850M / 44dB @1.9G, 2.1G / 40dB @2.3G / 43dB @2.5G, 2.6G
- Bandwidth : 28MHz @700M / 32MHz @850M / 65MHz @1.9G / 70MHz @2.1G / 10MHz @2.3G
  195M @2.5G / 70MHz @2.6G
- Output Power: 21dBm @700M, 850M, 2.3G / 24dBm @1.9G, 2.1G, 2.5G, 2.6G
- Input/Output impedances : 50ohm

1.2 Certification Notice

Specification or recommendation about Antennas is not available or not mention in this manual. As per default antennas, cables or coupling devices, contact www.frtek.com for further information.

For PLUGGABLE EQUIPMENT, the socket-outlet shall be installed near the equipment and shall be easily accessible.

- **FCC :** This equipment complies with the applicable sections of Title 47 CFR Rule Parts
- **UL :** This equipment complies with UL Standard for safety for information technology equipment, including electrical business equipment.
- **FDA/CDRH :** This equipment uses a LASER according to FDA/CDRH Rules. This product conforms to all applicable standards of 21 CFR Chapter 1, Subchapter J, Part 1040.

Note

RESTRICTED ACCESS LOCATION: location for equipment where both of the following apply:

- access can only be gained by **SERVICE PERSIONS** or by **USERS** who have been instructed about the reason for the restrictions applied to the location and about any precautions that shall be taken; and
- access is through the use of a **TOOL** or lock and key, or other means of security, and is controlled

PRIVATE AND CONFIDENTIAL © 2019 FRTEK CO., LTD.

by authority responsible for the location

- **Home/ personal use are prohibited**

PRIVATE AND CONFIDENTIAL © 2019 FRTEK CO., LTD.

Chapter 2

System Overview

2.1 System Overview
2.2 System Network Configuration

PRIVATE AND CONFIDENTIAL © 2019 FRTEK CO., LTD.

System Overview

2.1 System Overview

2.1.1 Overview

INOVA DAS is a system that can provide high quality telecommunication quality and data telecommunication service both in-building and outdoor. Also, this system is a DAS (Distributed Antenna System) system, a digital system capable of accommodating a plurality of frequency bands, available for public and private facilities.

INOVA DAS system can be installed in:

- Shopping Malls
- Hotels
- Campus
- Airports
- Subways
- Stadiums and convention centers, etc

INOVA DAS helps improve poor telecommunication in-building/outdoor wireless environments. This system provides telecommunication service to every corner of the building, and allows the user to use telecommunication service regardless of the location. Also, INOVA DAS supports worldwide telecommunication standards and public interface protocols.

System capable frequencies :

- 700MHz(LTE)
- 850MHz(CDMA, UMTS, LTE)
- 1.9GHz(UMTS, LTE)
- 2.1GHz(UMTS, LTE)
- 2.3GHz(LTE)
- 2.5GHz(TD-LTE) or 2.6GHz(LTE)

INOVA DAS is configured with standardized modules. The coverage of specific frequency band can be ensured by mounting the unit module of the frequency. Also, since multiple signals can be transmitted through optic cable, additional hardware modification is not needed.

PRIVATE AND CONFIDENTIAL © 2019 FRTEK CO., LTD.

The main characteristics and features of INOVA DAS can be summarized as below.

- Scalability
  - Supports optic fiber port.
  - Star or cascade structure of network configuration is available.
  - in-building or outdoor service is available.
  - EMS support of remote control/monitoring for all network configured MHU, EHUB, and ERU.
- Structure
  - Modular frequency upgrade.
  - Plug-in type module.
- Multi-band, multi-operator support
  - One ERU supports up to 6 frequency band service.
  - 2.6GHz frequency band service for Canada operators available.
  - Multi-operator support for one frequency band available.
- Low OPEX / CAPEX
  - Miniaturized design.
  - Easy installation and maintenance.
- Technology improvements
  - RF direct conversion technology by applying RF 1Chip.
  - Sectorization function for Alpha or Beta sector service.
  - 1Gbps Ethernet telecommunication function available for various applications.
  - Node Isolation function implementation to prevent service disconnection of lower node. (EHUB)

2.1.2 INOVA DAS Design Considerations

INOVA DAS is configured as below, and the model name is as the following.

INOVA DAS	Model Name	Type	Remark
MHU	FR-RLWFMHUUC	19″ Rack type	
EHUB	FR-RLWFEHUBUC	Wall mount type	
ERU	FR-RLWFDL24UC	Ceiling mount type	Available for wall mount

PRIVATE AND CONFIDENTIAL © 2019 FRTEK CO., LTD.

INOVA DAS is a digital optic repeater system capable of multi-band, multi-operator, and can extend wireless service for in-building and outdoor areas. This system can accommodate up to 6 bands. It is designed to support 700MHz (28MHz) LTE service, 850MHz (32MHz) CDMA & UMTS & LTE service, 1.9GHz (65MHz) UMTS & LTE service, 2.1GHz (70MHz) UMTS & LTE service, 2.3GHz(10MHz) LTE service, 2.5GHz(195MHz) TD-LTE service or 2.6GHz(70MHz) LTE service.

Service Band		Remark
MHU EHUB **ERU**	700MHz	
	850MHz	
	1.9GHz	
	2.1GHz	
	2.3GHz	
	2.5GHz or 2.6GHz	USA : 2.5GHz support Canada : 2.6GHz support

INOVA DAS MHU is configured with MWDM, MPSU, MDRU, MBIU, each unit is connected with Harness, RF cable, and optic cable. Each component is modularized, and can be easily mounted/dismounted, designed for simple module replacement and maintenance. Also, each unit is designed to withstand vibration test standard (IEC 60068-2-6:2007). The EHUB and ERU is designed for indoor use with enclosure structure designed to block dust, pollutant and insects.

ITEM	MHU	EHUB	ERU
Input Power	88V~132V (60Hz)	88V~132V (60Hz)	PoE++
Interface(Input)	RF	Optic	Ethernet
Interface(Output)	Optic	Ethernet	RF
Service Capability	CDMA, UMTS, LTE, TD-LTE	CDMA, UMTS, LTE, TD-LTE	CDMA, UMTS, LTE, TD-LTE
Type	Indoor	Indoor	Indoor
Cascade Function	X	2	Only 4-Star @EHUB 1EA

PRIVATE AND CONFIDENTIAL © 2019 FRTEK CO., LTD.

2.2 System Network Configuration

INOVA DAS basic network configuration for EHUB and ERU is as below picture.

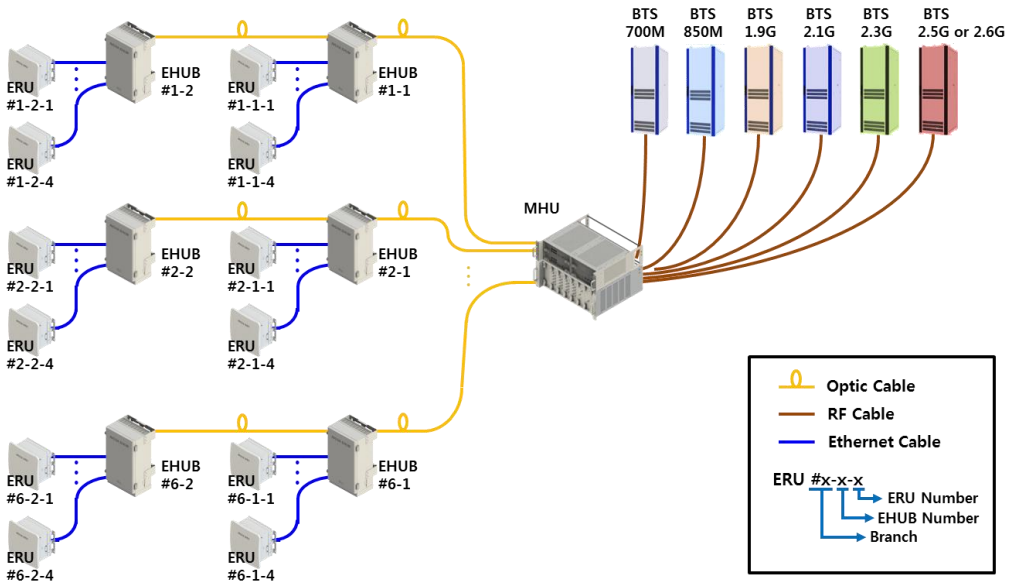

Figure 1. Basic Network Configuration.

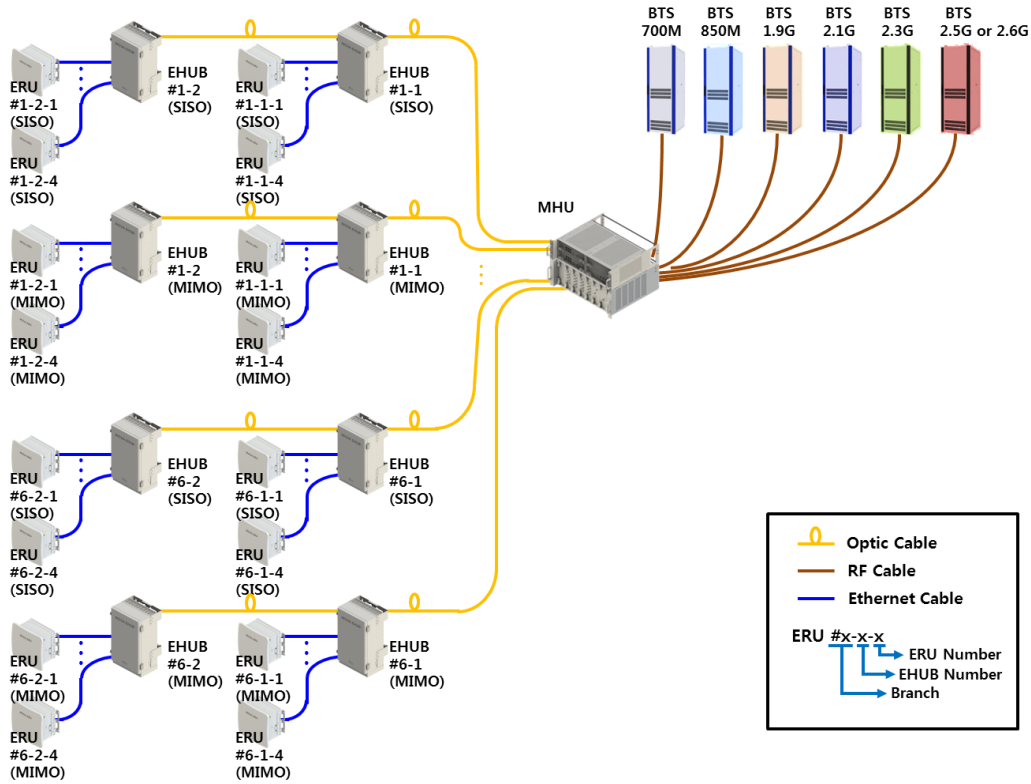

PRIVATE AND CONFIDENTIAL © 2019 FRTEK CO., LTD.

Figure 2. Extended Network Configuration.

MHU is connected to the base station with wired RF cable, and connected to the lower EHUB equipment with optic cable. EHUB is connected to ERU with wired Cat.7 cable, optic signal is converted into Ethernet signal and transmitted to ERU or the Ethernet signal is converted into optic signal and transmitted to MHU. Each branch of the MHU can each be connected cascade with 2 EHUBs for operation, I EHUB can be connected to a total of 4 ERUs.

For service extension, EHUB and ERU are connected by optic cable with DTU(MHU), one branch can operate up to 2 EHUBs, so up to 2 stages of cascade is available for configuration. Also, SISO ROU and ROU are set to the same TX, RX Frequency.

PRIVATE AND CONFIDENTIAL © 2019 FRTEK CO., LTD.

Chapter 3

System Configuration

3.1 ERU Figure and Configuration

PRIVATE AND CONFIDENTIAL © 2019 FRTEK CO., LTD.

System Configuration

3.1 ERU Figure and Configuration

ERU is a structure that can be used in-building, enclosure is configured as ceiling fixed type. ERU is configured with ERPSU, ERDTU, ERCPU, 4 ERFUs (ERU RF unit) and can support up to 6 frequency bands.

ERU functions can be explained as the following.

- Converts Ethernet signal to RF signal, amplifies and services through antenna. (Downlink)
- Converts RF signal to Ethernet signal, transmits to upper equipment. (Uplink)
- 700MHz, 850MHz, 1.9GHz, 2.1GHz, 2.3GHz, 2.5GHz or 2.6GHz service support.
- Receives power supply from EHUB through Cat.7 cable. (No separate PSU)
- Delay control function through Time Advance function.
- 1Gbps Ethernet port implementation for various use.

Below picture shows the ERU figure.

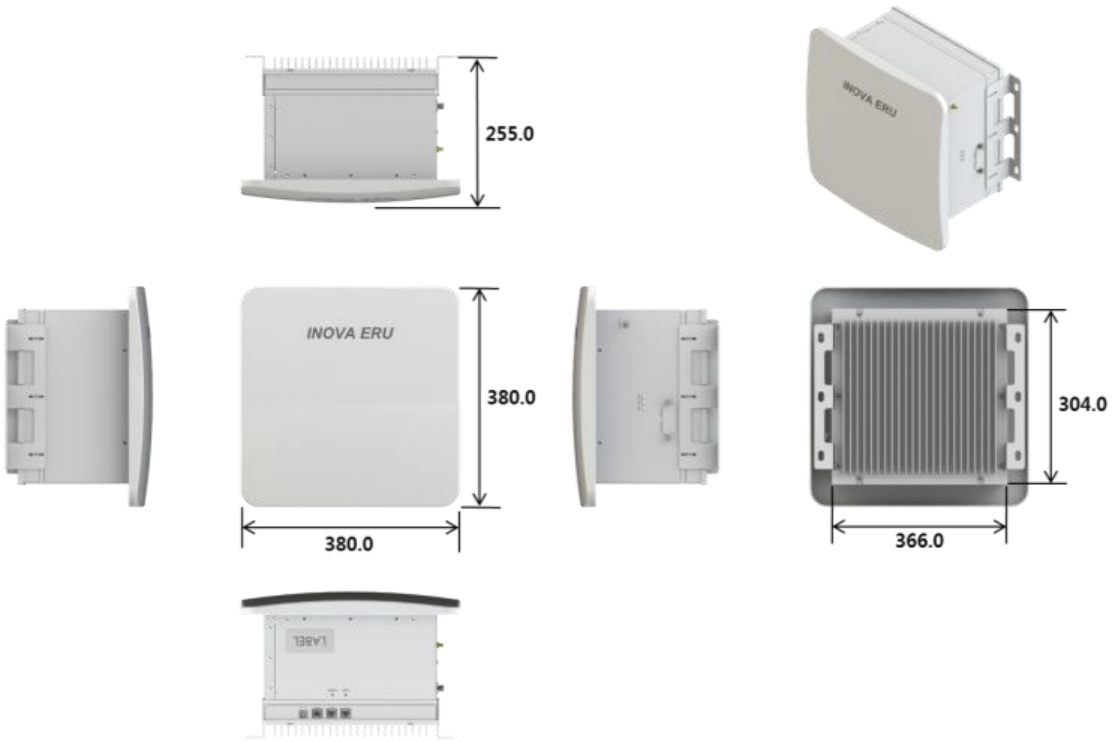

Figure 3. ERU Configuration

PRIVATE AND CONFIDENTIAL © 2019 FRTEK CO., LTD.

Item	Content	Remark
Size	380 * 380 * 255 (W * H * D)	Including bracket
Weight	Approx. 19kg	
Input power	PoE++	No separate PSU
Environment	In-building type	

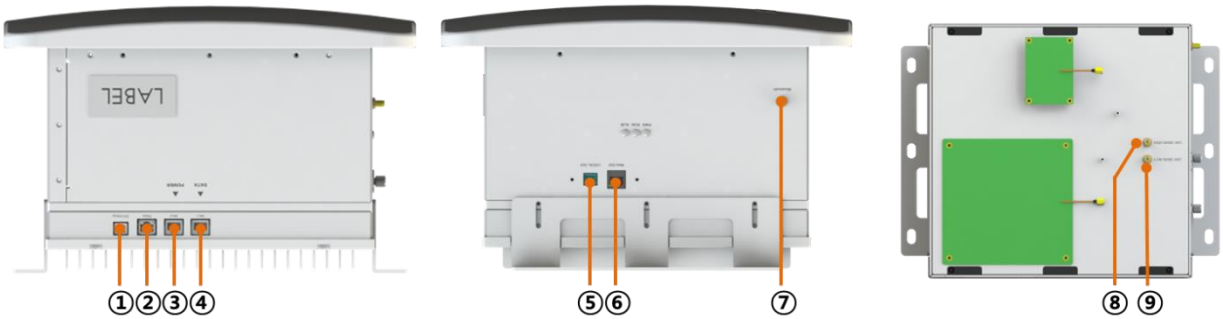

Figure 4. ERU Port Configuration.

No	Content
①	ERU DTU Debug port
②	1Gbps service port
③	PoE++ Ethernet port (Power)
④	PoE++ Ethernet port (Data)
⑤	ERU CPU Debug port
⑥	Web GUI Ethernet port
⑦	Bluetooth antenna port
⑧	High Band antenna connection port
⑨	Low Band antenna connection port

Caution

Maximum output operated from the ERU differs by frequency band, and must refer to the system specification for operation.

Caution

Low band antenna must be accurately connected to Low band port, High band antenna must be accurately connected to High band port.

PRIVATE AND CONFIDENTIAL © 2019 FRTEK CO., LTD.

Chapter 4

System Specification

4.1 System Specification
4.2 Organization Specification
4.3 Electrical Specification
4.4 Environmental Specification

PRIVATE AND CONFIDENTIAL © 2019 FRTEK CO., LTD.

System Specification

4.1 System Specification

INOVA DAS is an US/Canada DAS equipment, supports 700MHz, 850MHz, 1.9GHz, 2.1GHz, 2.3GHz, 2.5GHz or 2.6GHz frequency bands, and all frequency bands are designed for extension. INOVA DAS satisfies the following function and performance characteristics, and specifications not mentioned all satisfy the functions and performance requests of "3GPP TS25.104", "3GPP TS25.106", "3GPP TS 36.104".

INOVA DAS has the basic functions of the following.

- MHU is connected with base station by RF(wire) access, and connected to EHUB with one optic cable. Also, EHUB is connected with ERU with Cat.7 cable, and ERU is installed in shaded area to eliminate radio shaded areas.

-ERU receives power from EHUB through PoE++, and does not need a separate input power.

- Wireless quality of CDMA, UMTS, LTE, TD-LTE service is equal as base station wireless quality.

- When moving terminal enters neighboring base station, this system supports continuous handover.

4.1.1 System Specification per Frequency Band – 700MHz

• Frequency characteristics

Item		Performance requirements	Remark
Frequency Band	Forward direction (DL)	728 ~ 756MHz	BW : 28MHz LTE service support
	Reverse direction (UL)	698 ~ 716MHz 777 ~ 787MHz	

• Input/output characteristics

Item		Performance requirements	Remark
Output level	Forward direction (DL)	+21dBm/Total	Tolerance : +1dB
	Reverse direction (UL)	0dBm/Total	

• Noise figure and spurious emission characteristics

PRIVATE AND CONFIDENTIAL © 2019 FRTEK CO., LTD.

Item		Performance requirements	Remark
System noise figure (NF)	Reverse direction (UL)	Below 7dB	Maximum gain
Spurious emission (within band)	±5.05MHz	Below -14dBm	Maximum output RBW 100KHz
	±10.05MHz	Below -14dBm	
	±15.5MHz	Below -16dBm	
ACLR	$BW_{channel}$	45dBc	
	$2 * BW_{channel}$	45dBc	

- Other performance requirements

Item	Performance requirements	Remark
VSWR	Below 1.5 : 1	
Transmit/receive separation	Over 100dBc	

4.1.2 System Specification per Frequency Band – 850MHz

- Frequency characteristics

Item		Performance requirements	Remark
Frequency Band	Forward direction (DL)	862 ~ 894MHz	BW : 32MHz CDMA, UMTS, LTE service support
	Reverse direction (UL)	817 ~ 849MHz	

- Output characteristics

Item		Performance requirements	Remark
Output level	Forward direction (DL)	+21dBm/Total	Tolerance : +1dB
	Reverse direction (UL)	0dBm/Total	

- Noise figure and spurious emission characteristics

Item		Performance requirements	Remark
System noise figure (NF)	Reverse direction (UL)	Below 7dB	Maximum gain
Spurious emission (within band)	±5.05MHz	Below -14dBm	Maximum output RBW 100KHz
	±10.05MHz	Below -14dBm	

PRIVATE AND CONFIDENTIAL © 2019 FRTEK CO., LTD.

	±15.5MHz	Below -16dBm	
ACLR	BW $_{channel}$	45dBc	
	2 * BW $_{channel}$	45dBc	

- Other performance requirements

Item	Performance requirements	Remark
VSWR	Below 1.5 : 1	
Transmit/receive separation	Over 100dBc	

4.1.3 System Specification per Frequency Band – 1.9GHz

- Frequency characteristics

Item		Performance requirements	Remark
Frequency Band	Forward direction (DL)	1930 ~ 1995MHz	BW : 65MHz UMTS, LTE service support
	Reverse direction (UL)	1850 ~ 1915MHz	

- Output characteristics

Item		Performance requirements	Remark
Output level	Forward direction (DL)	+24dBm/Total	Tolerance : +1dB
	Reverse direction (UL)	0dBm/Total	

- Noise figure and spurious emission characteristics

Item		Performance requirements	Remark
System noise figure (NF)	Reverse direction (UL)	Below 7dB	Maximum gain
Spurious emission (within band)	±5.05MHz	Below -14dBm	Maximum output RBW 100KHz
	±10.05MHz	Below -14dBm	
	±15.5MHz	Below -16dBm	
ACLR	BW $_{channel}$	45dBc	
	2 * BW $_{channel}$	45dBc	

PRIVATE AND CONFIDENTIAL © 2019 FRTEK CO., LTD.

- Other performance requirements

Item	Performance requirements	Remark
VSWR	Below 1.5 : 1	
Transmit/receive separation	Over 100dBc	

4.1.4 System Specification per Frequency Band – 2.1GHz

- Frequency characteristics

Item		Performance requirements	Remark
Frequency Band	Forward direction (DL)	2110 ~ 2180MHz	BW : 70MHz UMTS, LTE service support
	Reverse direction (UL)	1710 ~ 1780MHz	

- Output characteristics

Item		Performance requirements	Remark
Output level	Forward direction (DL)	+24dBm/Total	Tolerance : +1dB
	Reverse direction (UL)	0dBm/Total	

- Noise figure and spurious emission characteristics

Item		Performance requirements	Remark
System noise figure (NF)	Reverse direction (UL)	Below 7dB	Maximum gain
Spurious emission (within band)	±5.05MHz	Below -14dBm	Maximum output RBW 100KHz
	±10.05MHz	Below -14dBm	
	±15.5MHz	Below -16dBm	
ACLR	$BW_{channel}$	45dBc	
	$2 * BW_{channel}$	45dBc	

- Other performance requirements

Item	Performance requirements	Remark
VSWR	Below 1.5 : 1	

PRIVATE AND CONFIDENTIAL © 2019 FRTEK CO., LTD.

Transmit/receive separation	Over 100dBc	

4.1.5 System Specification per Frequency Band – 2.3GHz

- Frequency characteristics

Item		Performance requirements	Remark
Frequency Band	Forward direction (DL)	2350 ~ 2360MHz	BW : 10MHz LTE service support
	Reverse direction (UL)	2305 ~ 2315MHz	

- Output characteristics

Item		Performance requirements	Remark
Output level	Forward direction (DL)	+21dBm/Total	Tolerance : +1dB
	Reverse direction (UL)	0dBm/Total	

- Noise figure and spurious emission characteristics

Item		Performance requirements	Remark
System noise figure (NF)	Reverse direction (UL)	Below 7dB	Maximum gain
Spurious emission (within band)	±5.05MHz	Below -14dBm	Maximum output RBW 100KHz
	±10.05MHz	Below -14dBm	
	±15.5MHz	Below -16dBm	
ACLR	$BW_{channel}$	45dBc	
	$2 * BW_{channel}$	45dBc	

- Other performance requirements

Item	Performance requirements	Remark
VSWR	Below 1.5 : 1	
Transmit/receive separation	Over 100dBc	

4.1.6 System Specification per Frequency Band – 2.5GHz

- Frequency characteristics

PRIVATE AND CONFIDENTIAL © 2019 FRTEK CO., LTD.

Item		Performance requirements	Remark
Frequency Band	Forward direction (DL)	2496 ~ 2690MHz	BW : 194MHz TD-LTE service support
	Reverse direction (UL)	2496 ~ 2690MHz	

- Output characteristics

Item		Performance requirements	Remark
Output level	Forward direction (DL)	+24dBm/Total	Tolerance : +1dB
	Reverse direction (UL)	0dBm/Total	

- Noise figure and spurious emission characteristics

Item		Performance requirements	Remark
System noise figure (NF)	Reverse direction (UL)	Below 7dB	Maximum gain
Spurious emission (within band)	±5.05MHz	Below -14dBm	Maximum output RBW 100KHz
	±10.05MHz	Below -14dBm	
	±15.5MHz	Below -16dBm	
ACLR	$BW_{channel}$	45dBc	
	$2 * BW_{channel}$	45dBc	

- Other performance requirements

Item	Performance requirements	Remark
VSWR	Below 1.5 : 1	
Transmit/receive separation	Over 100dBc	

4.1.7 System Specification per Frequency Band – 2.6GHz

- Frequency characteristics

Item		Performance requirements	Remark
Frequency Band	Forward direction (DL)	2620 ~ 2690MHz	BW : 70MHz LTE service support
	Reverse direction (UL)	2500 ~ 2570MHz	

- Output characteristics

PRIVATE AND CONFIDENTIAL © 2019 FRTEK CO., LTD.

Item		Performance requirements	Remark
Output level	Forward direction (DL)	+24dBm/Total	Tolerance : +1dB
	Reverse direction (UL)	0dBm/Total	

- Noise figure and spurious emission characteristics

Item		Performance requirements	Remark
System noise figure (NF)	Reverse direction (UL)	Below 7dB	Maximum gain
Spurious emission (within band)	±5.05MHz	Below -14dBm	Maximum output RBW 100KHz
	±10.05MHz	Below -14dBm	
	±15.5MHz	Below -16dBm	
ACLR	$BW_{channel}$	45dBc	
	$2 * BW_{channel}$	45dBc	

- Other performance requirements

Item	Performance requirements	Remark
VSWR	Below 1.5 : 1	
Transmit/receive separation	Over 100dBc	

4.2 Organization Specification

4.2.1 Structure and Type

Item	Type	Option
MHU	19"Rack type	In-building type
EHUB	Wall fixed type	In-building type
ERU	Wall/ceiling fixed type	In-building type

- MHU, EHUB, ERU of INOVA DAS should be designed considering installation space and operator's convenience, and the structure design should be elegant.
- Components of INOVA DAS should be modular, installation should be made in a structure that each component can be easily mounted and dismounted, and should be easy to replace and maintain.

PRIVATE AND CONFIDENTIAL © 2019 FRTEK CO., LTD.

- Each equipment of INOVA DAS is designed in a structure to block dust, pollutant and insects.
- Each equipment of INOVA DAS is designed to withstand vibration test standard.
- All parts of the cabinet should be smoothly treated in order to prevent personal physical injury during maintenance.
- INOVA DAS provides Timing Advance function for network optimization.

4.2.2 Manufacturing and Processing

- Sealing materials have a very strong thermal properties, and are not torn or damaged by chemicals.
- Internal/external wiring of INOVA DAS is designed elegantly with lapping method or connecter connecting method, and can withstand vibration.
- Printed circuit board of INOVA DAS is made of glass epoxy resin or equivalent products, soldering area is exquisite, appearance after soldering is elegant, and has electricity insulator film in order to prevent reduction of insulation resistance due to corrosion, pollutant, and accumulation of dust and moisture.
- Internal/external surface of painted cabinet has the same color, cabinet exterior is designed to withstand blistering, peeling and cracking for 5 years.
- INOVA DAS is designed and manufactured considering methods for emission carbon reduction. (power consumption reduction, material reduction, etc)

4.2.3 Materials and Components

- Passive devices used in INOVA DAS have stable characteristics on frequency and temperature change, active devices are industrial or equivalent semiconductors, and integrated circuits are solid-state devices.
- Wires used in INOVA DAS are tolerance coated wiring with sufficient current capacity and withstands voltage.
- Coaxial line used to connect each component of INOVA DAS are shielded cable of aluminum or copper cladding.
- All metal used in INOVA DAS are designed to withstand not only the generally known corrosion, but also local corrosion including stress corrosion and cracking.
- Plastic used should be insoluble to solvent, and is designed to be free from cracking, molting, and color change when exposed to ammonia.

PRIVATE AND CONFIDENTIAL © 2019 FRTEK CO., LTD.

- Plastic is designed not to crack when exposed to materials(ex-insulators, filing compound) used for cable manufacturing.
- Enclosure, components, PCB, solder, cables of INOVA follow RoHS(Restriction to hazardous substances).

4.3 Electrical Specification

- Power supplied to MHU, EHUB operates normally on commercial power supply (AC120/60Hz).
- There is overvoltage and over current protection function for the power supply.
- When after momentary power outage occurs, RF set value automatically returns to the status right before the power outage.
- Withstand voltage of primary side power terminal and enclosure ground on input/output terminal is DC 2.75KV for one minute, and leakage current is within 100mA.
- Withstand voltage of primary side power terminal and secondary side ground on input/output terminal is DC 4.25KV for one minute, and leakage current is within 100mA.
- Leakage current on phase(120V) is within 3.5mA.
- Surge should not be abnormal when more than 2KV voltage is applied on AC input terminal.
- Equipment grounding is located on both sides of the enclosure.
- Fuse should be visually confirmable(MHU, EHUB), and should be replaceable without equipment disassemble.
- All components used on INOVA DAS satisfies EMI terms of FCC title 47, part 15, subject J, class A.
- Grounding strap to ground the grounding wire of #6AWG must be attached to the enclosure.

4.4 Environmental Specification

- No condensation marks should occur inside the equipment when specified temperature and humidity tests are performed.
- INOVA DAS should be designed to have no internal condensation or deterioration due to humidity and internal, external temperature differences, even when it is not normally operated.
- When performing specified vibration test, system performance or mechanical damage should not occur.
- When performing specified waterproof test, there should be no moisture penetration inside the equipment.
- MHU environment test should be performed in accordance to ambient temperature operation

PRIVATE AND CONFIDENTIAL © 2019 FRTEK CO., LTD.

standards(in-building standard, for external enclosure outdoor standard).

- Environment test items and method repetition cycle item should be in accordance to operator environment test procedure.

Main environment test conditions for INOVA DAS are as the following.

Item		Conditions	Performance Requirements
Environment test	In-building	- Temperature : -10 ~ +45°C - Humidity : 0 ~ 90% RH	- Output change : within ±3dB - No problem inside/outside enclosure
Vibration test		- 10 ~ 150Hz, gravitational acceleration 1G (IEC 60068-2-6)	- No system performance change - No problem inside/outside enclosure
Noise test		- GR-65-Core(4.6), Level 2	- Below 65dBA (When using external Fan)

PRIVATE AND CONFIDENTIAL © 2019 FRTEK CO., LTD.

Chapter 5

System Installation

5.1 Tools
5.2 ERU Installation
5.3 2.5GHz, 2.6GHz Setting Method

PRIVATE AND CONFIDENTIAL © 2019 FRTEK CO., LTD.

System Installation

"This manual is to provide product installation method and product information to the user operating the INOVA DAS system, the repeater manager who uses the operation manual needs to require professional knowledge and experience on construction operation of repeater systems. "

This chapter explains how to connect power cables and how to install each equipment and optic cable. It specifically describes MHU(MWDM, MPSU, MDRU, MBIU), EHUB, ERU installation method and cable connecting method.

5.1 Tools

Tools needed for installation are as below.

No.	Tools	No.	Tools
1	ESD Gloves	2	Torque Wrench Set
3	33mm Torque Wrench	4	+, 3Φ Screw Driver
5	Wire Stripper	6	Wire Cutter
7	Rubber Mallet	8	Digital Multi-meter

PRIVATE AND CONFIDENTIAL © 2019 FRTEK CO., LTD.

Other cables and components needed for installation are as below.

No.	Tools	No.	Tools
1	AC Cable	2	INOVA Harness Cable
3	INOVA RF Cable	4	Ground Wire Line
5	Optic Connector Cleaner	6	LC-type Optic Fiber
7	Optic Module	8	SMA Cable
9	ANT RF Cable	10	Bracket Bolt/Nut

PRIVATE AND CONFIDENTIAL © 2019 FRTEK CO., LTD.

5.2 ERU Installation

5.2.1 Product Ceiling Installation

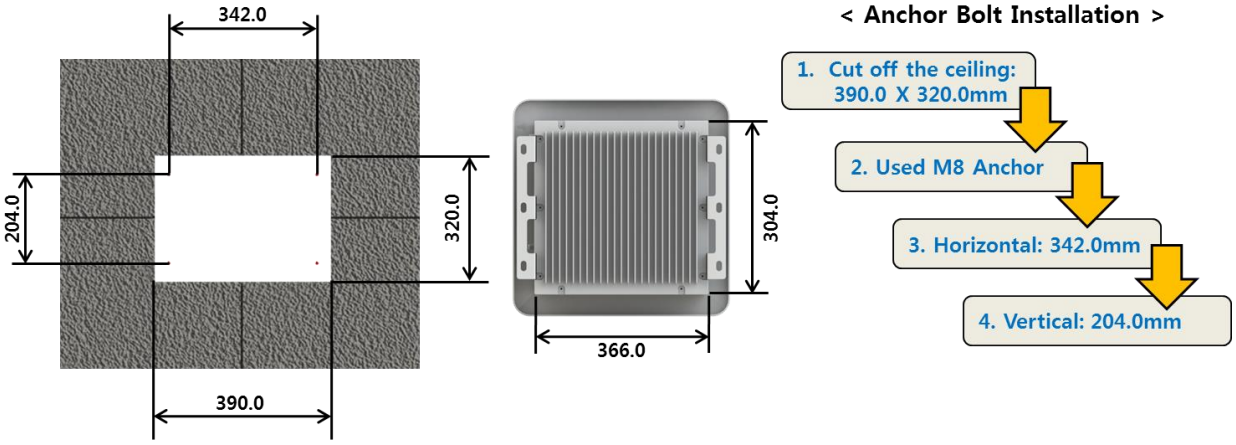

Figure 5. ERU Ceiling Installation.

ERU can be installed on the ceiling through mount bracket. Above figure is a simplified drawing of the ceiling. Use anchor bolt to fix ERU for ceiling installation.

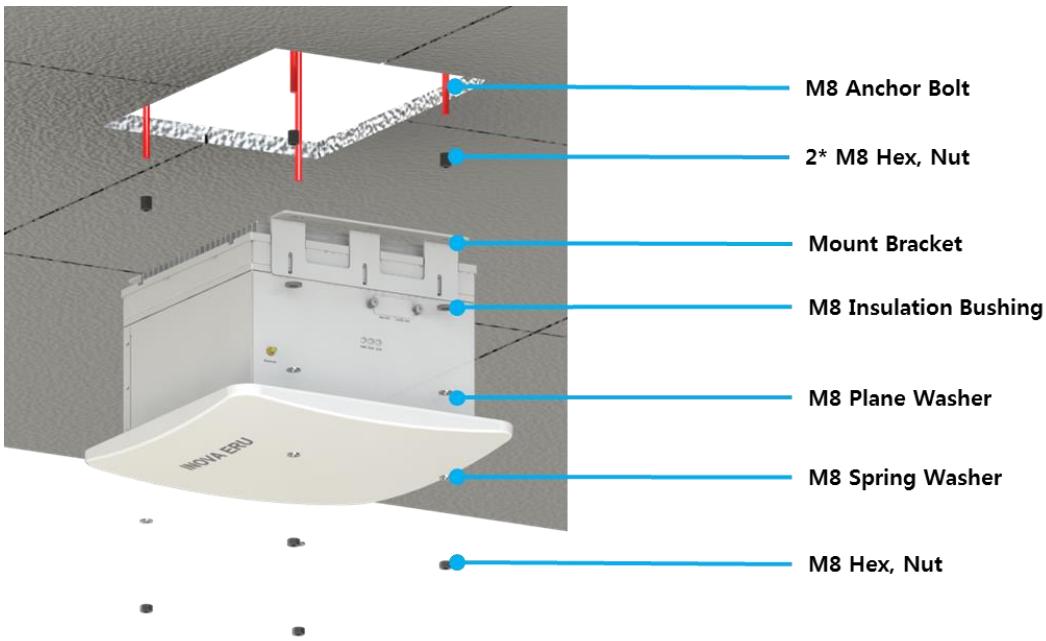

Figure 6. ERU Ceiling Installation Assemble.

Above figure is the assemble drawing of EHUB ceiling installation. The assemble orders are as below.

1. Insert bakelite to M8 Anchor Bolt, and locate ERU according to M8 Anchor Bolt location.

PRIVATE AND CONFIDENTIAL © 2019 FRTEK CO., LTD.

2. Insert M8 Insulation Bushing, M8 Plane Washer, and M8 Spring Washer.
3. Tighten M8 Hex, Nut using spanner.

5.2.2 Product Wall Installation

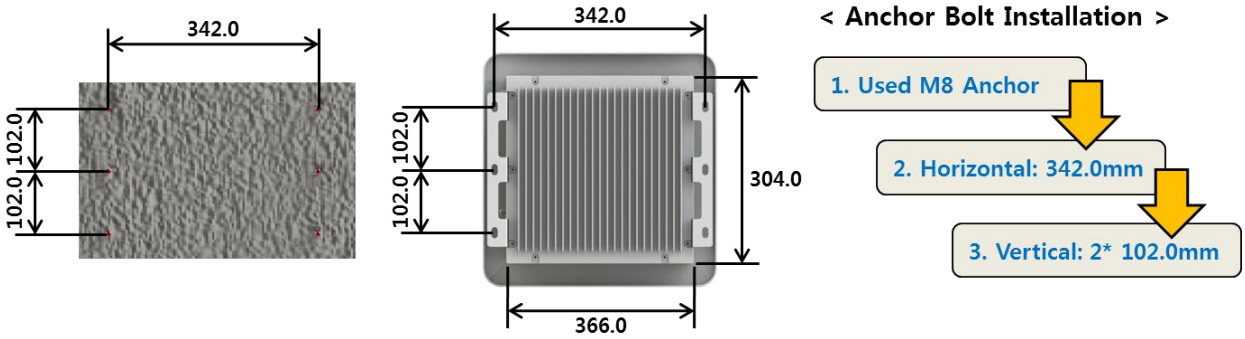

Figure 7. ERU Anchor Bolt Wall Assemble.

ERU can be installed on the wall through mount bracket. Above figure is a simplified drawing of the wall. Us anchor bolt to fix ERU for wall installation.

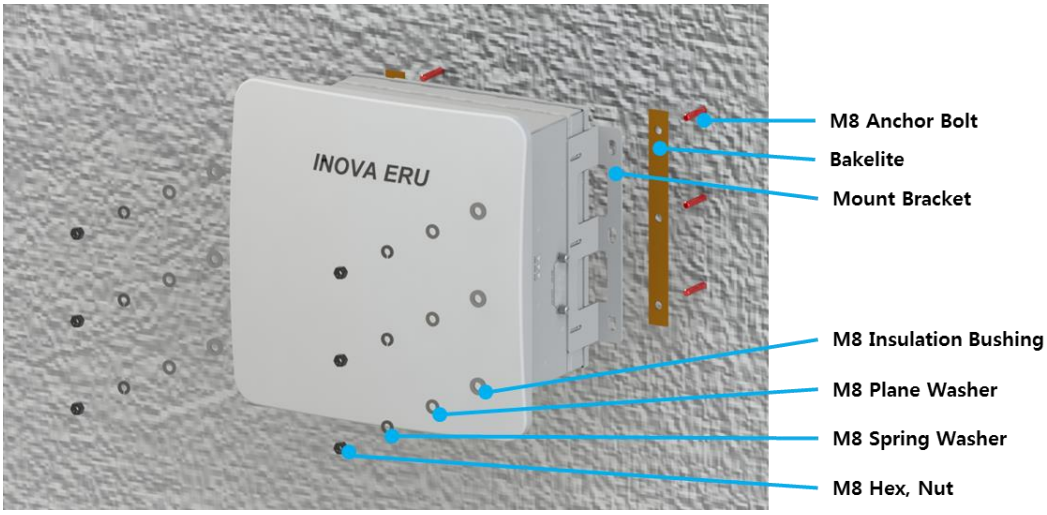

Figure 8. ERU Wall Installation Assemble.

Above figure is the assemble drawing of ERU wall installation. The assemble orders are as below.

1. Insert bakelite to M8 Anchor Bolt, and locate ERU according to M8 Anchor Bolt location.
2. Insert M8 Insulation Bushing, M8 Plane Washer, and M8 Spring Washer.
3. Tighten M8 Hex, Nut using spanner.

PRIVATE AND CONFIDENTIAL © 2019 FRTEK CO., LTD.

5.2.3 Antenna Connection

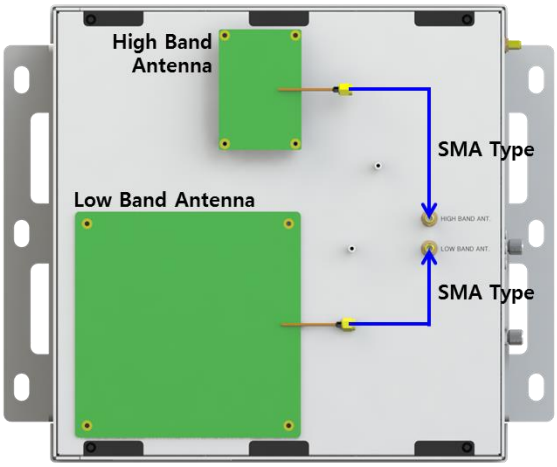

Figure 9. ERU Antenna Connection.

ERU is installed on shaded area to support continuous telecommunication service. Below the ERU antenna cover there are 2 antennas (Low band, High band) and each antenna port as above figure. The low band antenna should be connected to the low band antenna port, and the high band antenna should be connected to the high band antenna port.

Reference

ERU low band antenna gain is 00dB, high band antenna gain is 00dB.

5.3 2.5GHz, 2.6GHz Setting Method

INOVA DAS is basically available to service 700MHz, 850MHz, 1.9GHz, 2.1GHz, 2.3GHz frequency bands, and is designed to select one of 2.5GHz or 2.6GHz frequency band for service. So according to the module inserted on the MHU and ERU, it can service 700MHz, 850MHz, 1.9GHz, 2.1GHz, 2.3GHz, 2.5GHz or 700MHz, 850MHz, 1.9GHz, 2.1GHz, 2.3GHz, 2.6GHz. Therefore, as the below figure for 2.5Ghz and 2.6Ghz, the MRFU, ERFU, ERU Multiplexer of the desired frequency band should be inserted in the INOVA DAS for service.

PRIVATE AND CONFIDENTIAL © 2019 FRTEK CO., LTD.

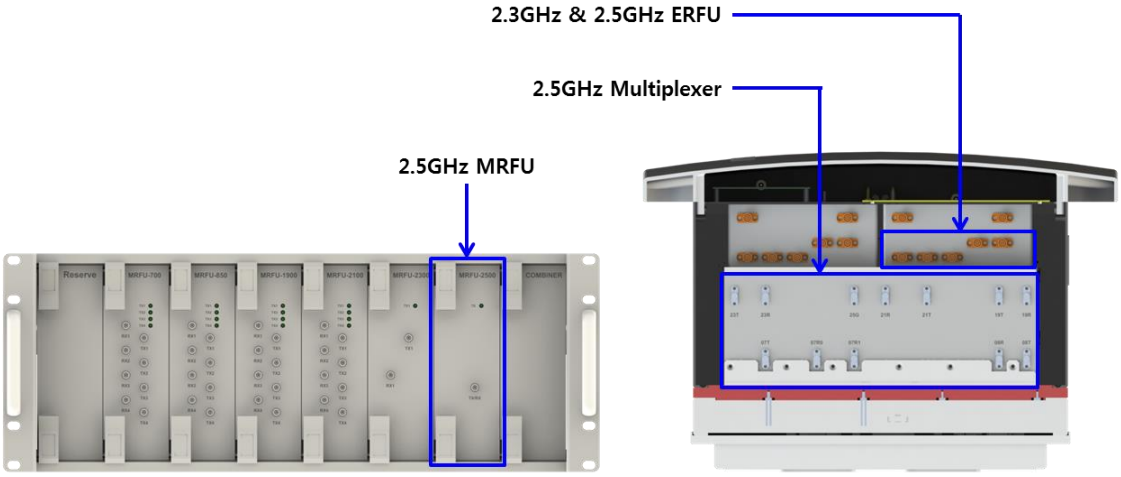

[MHU - MBIU] [ERU]

Figure 10. For 2.5GHz Service, Insert 2.5GHz MRFU/ERFU/Multiplexer Module.

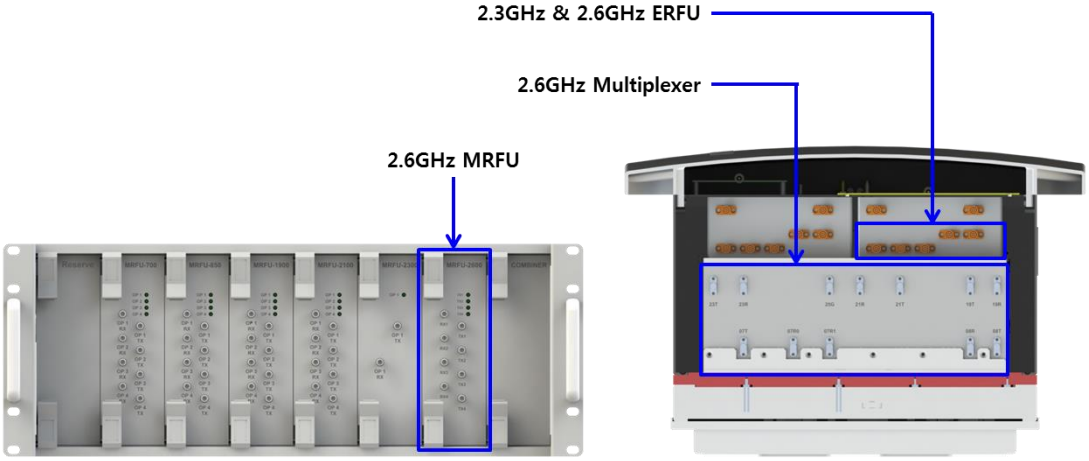

[MHU - MBIU] [ERU]

Figure 11. For 2.6GHz Service, Insert 2.6GHz MRFU/ERFU/Multiplexer Module.

PRIVATE AND CONFIDENTIAL © 2019 FRTEK CO., LTD.

Chapter 6

Local GUI(Graphical User Interface)

6.1 Local GUI Main Screen
6.2 Local GUI ERU Screen

PRIVATE AND CONFIDENTIAL © 2019 FRTEK CO., LTD.

Local GUI(Graphical User Interface)

"This manual is to provide product installation method and product information to the user operating the INOVA DAS system, the repeater manager who uses the operation manual needs to require professional knowledge and experience on construction operation of repeater systems. "

- This operation program is designed for controlling and monitoring INOVA DAS.
- This operation program uses USB-B type port configured on each equipment CPU for telecommunication.
- User is available to monitor and control the INOVA DAS operation status through MHU and ERU main screen.

6.1 Local GUI Main Screen

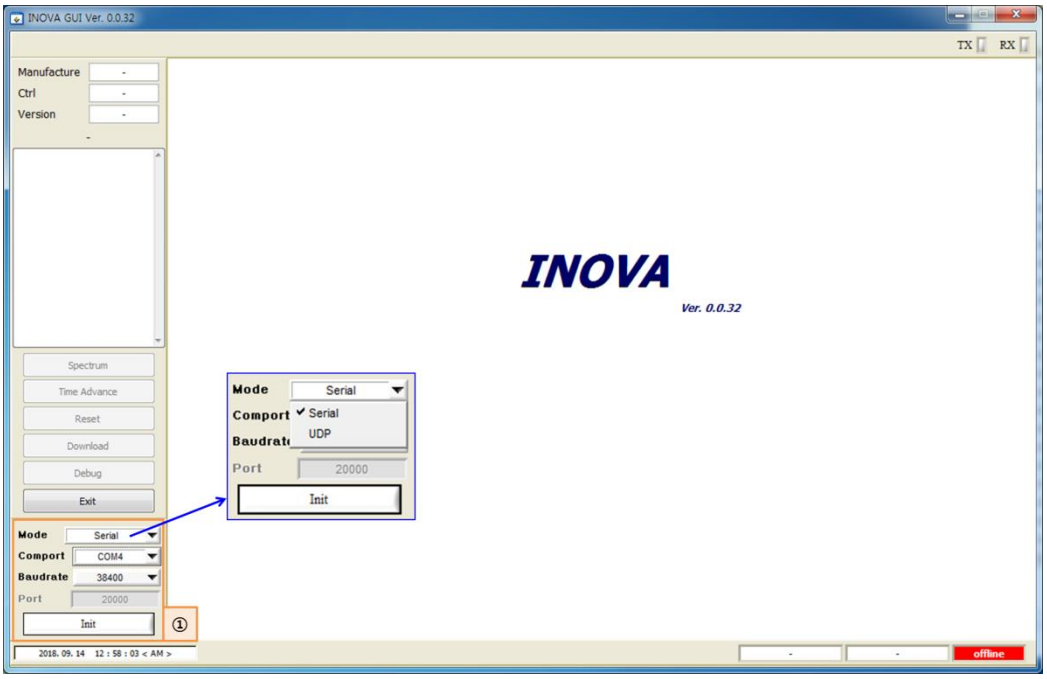

Figure 12. Local GUI Initial Screen.

When executing Local GUI of INOVA DAS, the GUI initial screen is shown as the above figure. Local GUI and INOVA DAS equipment can be connected with serial communication or UDP communication..

PRIVATE AND CONFIDENTIAL © 2019 FRTEK CO., LTD.

Serial telecommunication can be used by connecting to USB B-type port of MCPU or ERCPU, UDP telecommunication can be used by connecting to Ethernet port of MCPU or ERCPU.

① Telecommunication Connection

This is the window to select telecommunication method for GUI operation with INOVA DAS.

- **Mode :** You can select GUI connection method for equipment. (Serial or UDP telecommunication)
- **Comport :** You can select auto set serial port on GUI notebook.
- **Baudrate :** Basically uses 38400.

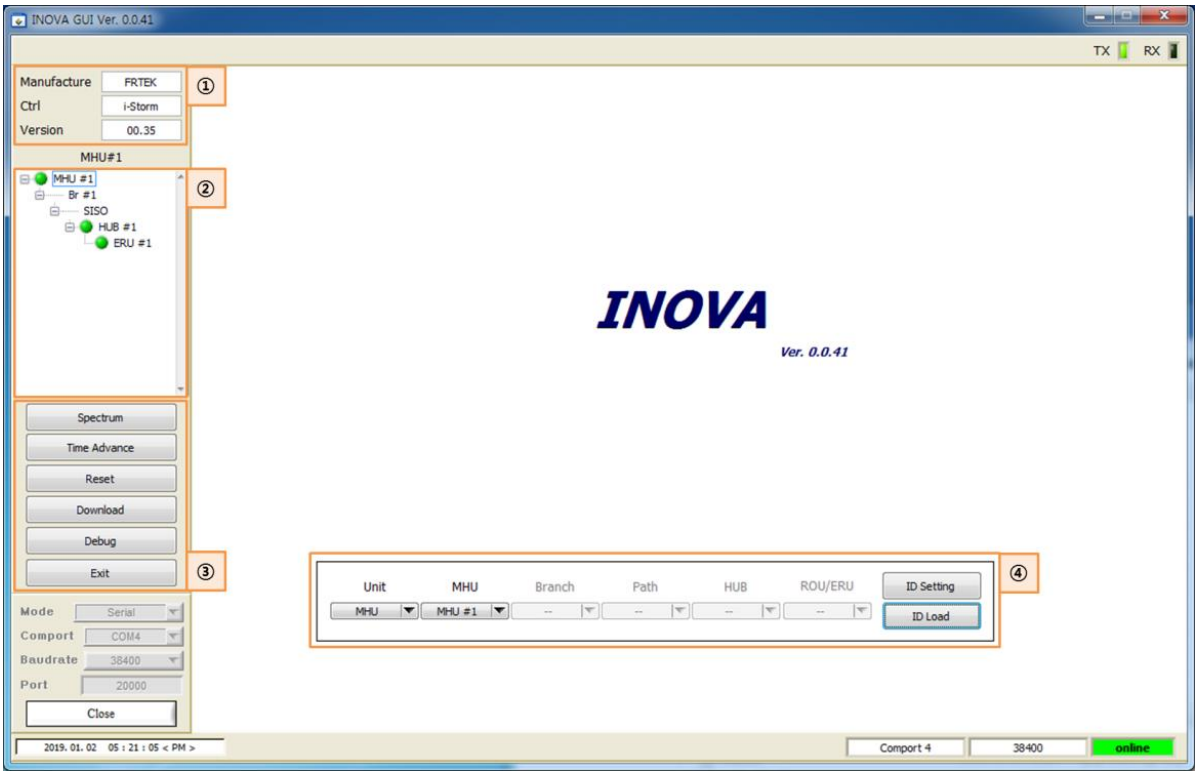

Figure 13. Local GUI Main Screen.

GUI screen as above figure will show up when selecting telecommunication method and connecting GUI and INOVA DAS. When accessing to the desired equipment (MHU, EHUB, ERU) from the screen, GUI screen of the equipment will appear.

① Manufacturer Information

Window to check INOVA DAS manufacturer information and GUI version information.

② Equipment Tree

Window to check current INOVA DAS connection status all at once. From this tree configuration, the status of equipment connected to each branch of the MHU, connected EHUB, ERU configuration information can be checked, and existence of equipment alarm can be confirmed through the alarm on the side. Also, by selecting the desired equipment on this window, the screen to check status information and to control the equipment will show.

③ GUI Function

INOVA spectrum analyzer function or time advance, download function can be checked on this item.

- **Spectrum :** Item to use INOVA DAS spectrum analyzer function. Digital input/output signal of all frequency bands can be checked from this function, and each service signal per frequency can be checked real time. Spectrum Analyzer screen is as below.

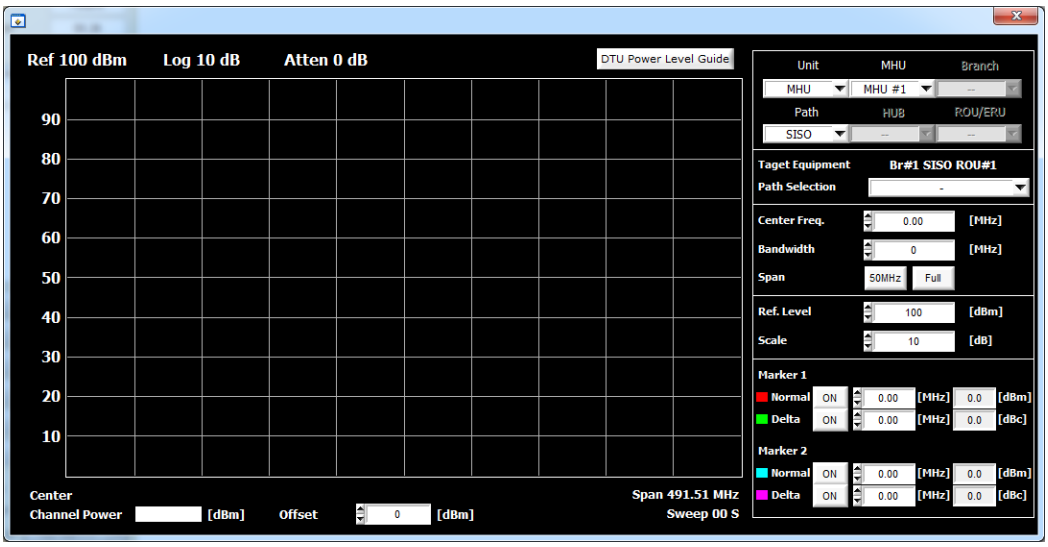

Figure 14. Spectrum Analyzer Window Screen.

- **Time Advance :** Item to use INOVA DAS time advance function. Measures delay between optic cables of configured equipment, and can automatically set system delay to user set delay value. Time Advance screen is as below.

PRIVATE AND CONFIDENTIAL © 2019 FRTEK CO., LTD.

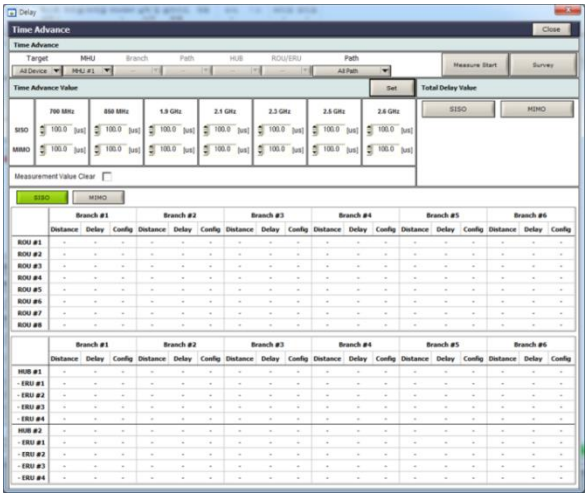

Figure 15. Time Advance Window Screen.

- **Reset :** Item to use reset function of CPU or DTU of the current configured equipment. Below figure shows the reset window.

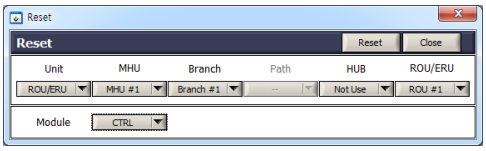

Figure 16. Reset Window Screen.

- **Download :** Item to use function to download firmware such as CPU, DTU, RF unit of the current configured equipment. Below figure shows the download window..

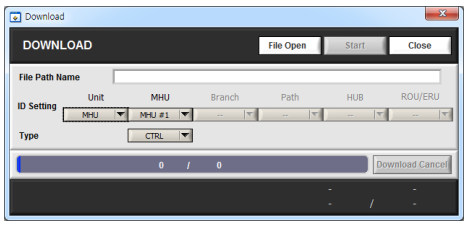

Figure 17. Download Window Screen.

- **Debug :** Item to use debug on GUI.
- **Exit :** Item to use when exiting current GUI.

④ ID Setting

Item to read set ID, and reset ID. When using this item, GUI needs to be accessed by connecting cable to EHUB CPU and ERCPU. When ID is assigned, EHUB ID and ERU ID must all be set.

PRIVATE AND CONFIDENTIAL © 2019 FRTEK CO., LTD.

6.2 Local GUI ERU Screen

6.2.1 ERU Main Screen

- <Status Mode> requests ERU equipment's status information at intervals of 1
- By clicking <Set Mode> button, <Set> button next to the button is activated, enters to <Set Mode>, stops status request and can control ERU items.
- When setting is successfully completed, <Setting Success> message window is shown.
- When clicking <Close> button the window will close, and go back to <GUI Main>.

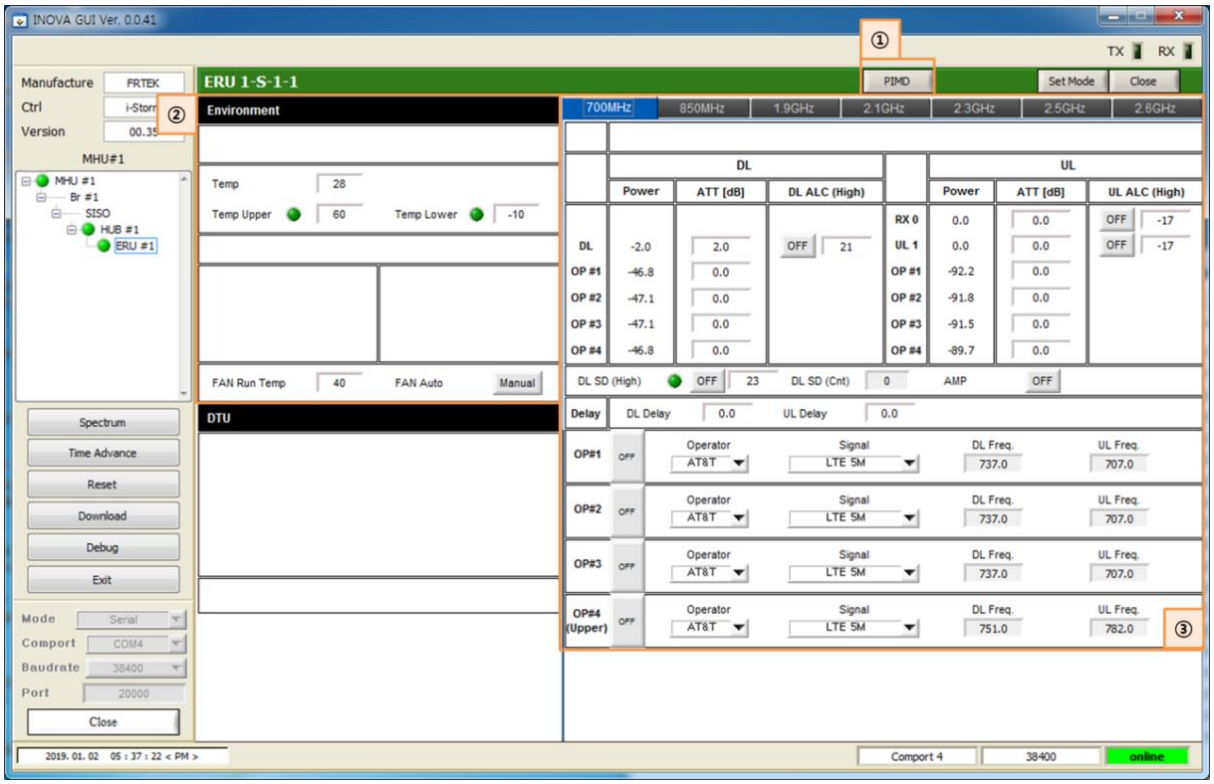

Figure 18. Local GUI ERU Screen.

Above figure shows the INOVA ERU GUI screen. ERU main screen is available to monitor temperature, status monitoring and control of the RF signal.

① PIMD

Item for ERU PIMD function control. On/off button to generate CW tone on RX path (Uplink) of frequency band exists, and items to measure and check RX gain is configured.

PRIVATE AND CONFIDENTIAL © 2019 FRTEK CO., LTD.

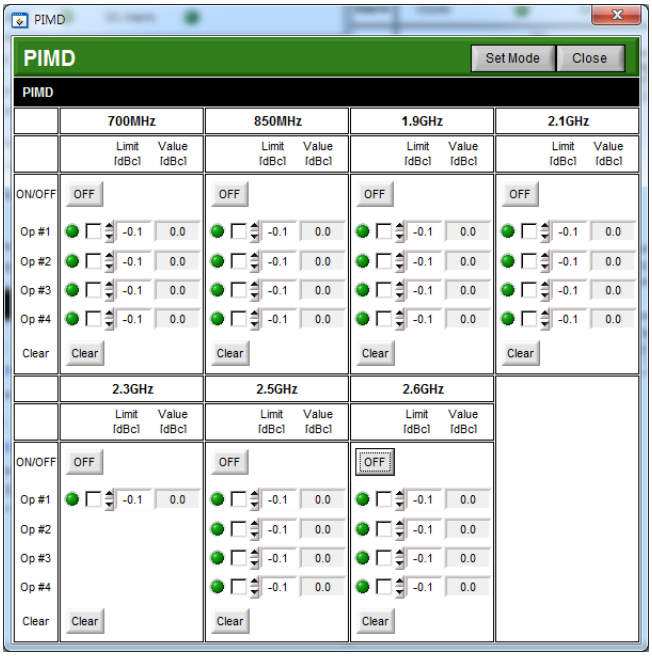

Figure 19. ERU PIMD Screen.

② Environment

Item to check ERU temperature alarm.

③ Band Information

TX output signal(Downlink) and RX input signal (Uplink) status monitoring and control per each frequency band is available in this item, and channel information per each frequency set on MHU can be checked. Also, same as MHU, 2.5GHz and 2.6GHz can be activated/deactivated according to inserted RRFU.

PRIVATE AND CONFIDENTIAL © 2019 FRTEK CO., LTD.

6.2.2 ERU Main Screen per Frequency

- **700MHz Band Information**

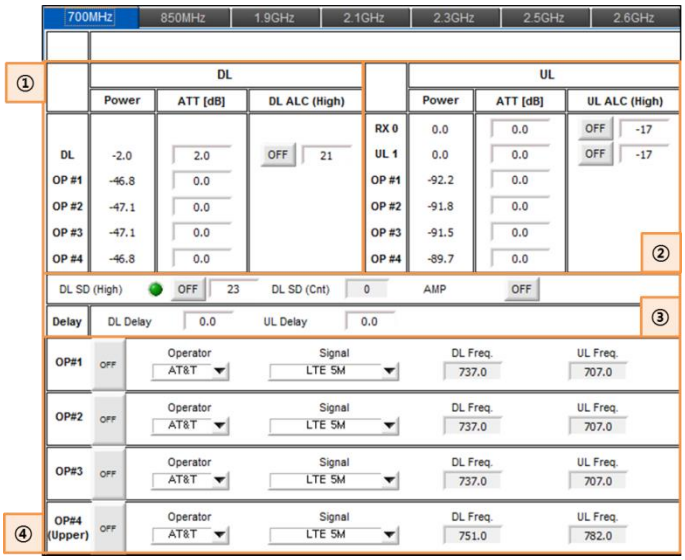

Figure 20. 700MHz ERU Band Information Screen.

① 700MHz TX Signal Monitoring and Control

The RF signal output level(Downlink) of 700MHz band received from the MHU, EHUB can be checked on this item, and the output level can be manually adjusted by controlling ATTen. according to the operator. Also, ALC function is configured for the user to automatically adjust output level by inputting the desired ALC level and turning the function ON.

② 700MHz RX Signal Monitoring and Control

The RF signal input level(Uplink) of 700MHz band received from the terminal can be checked on this item. Also, same as TX, input level can be manually adjusted by controlling ATTen., and automatic input level adjustment through ALC is implemented.

③ 700MHz TX Shutdown and Delay Control

Item implements shutdown function of automatically turning HPA off when 700MHz TX output signal gets high due to overpower. User can set shutdown signal level, function operates when switch is on.

Also, item is configured with delay control item to control 700MHz system delay. When user inputs specific value on this delay window, 700MHz system delay applies with the user input value added.

PRIVATE AND CONFIDENTIAL © 2019 FRTEK CO., LTD.

④ 700MHz Channel Status

Item cannot be controlled on the ERU screen, the operator label, channel filter type, downlink frequency, uplink frequency set from MHU per each operator can be checked.

- **850MHz Band Information**

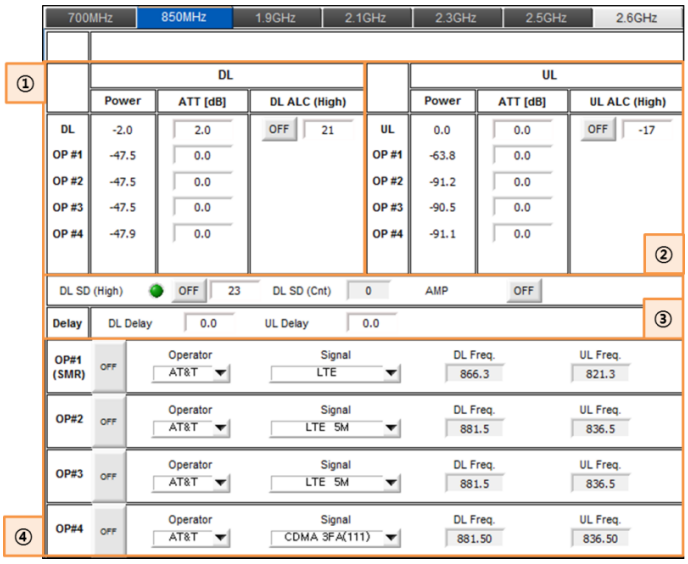

Figure 21. 850MHz ERU Band Information Screen.

① 850MHz TX Signal Monitoring and Control

The RF signal output level(Downlink) of 850MHz band received from the MHU, EHUB can be checked on this item, and the output level can be manually adjusted by controlling ATTen. according to the operator. Also, ALC function is configured for the user to automatically adjust output level by inputting the desired ALC level and turning the function ON.

② 850MHz RX Signal Monitoring and Control

The RF signal input level(Uplink) of 850MHz band received from the terminal can be checked on this item. Also, same as TX, input level can be manually adjusted by controlling ATTen., and automatic input level adjustment through ALC is implemented.

③ 850MHz TX Shutdown and Delay Control

Item implements shutdown function of automatically turning HPA off when 850MHz TX output signal gets high due to overpower. User can set shutdown signal level, function operates when switch is on.

PRIVATE AND CONFIDENTIAL © 2019 FRTEK CO., LTD.

Also, item is configured with delay control item to control 850MHz system delay. When user inputs specific value on this delay window, 850MHz system delay applies with the user input value added. .

④ 850MHz Channel Status

Item cannot be controlled on the ERU screen, the operator label, channel filter type, downlink frequency, uplink frequency set from MHU per each operator can be checked.

- **1.9GHz Band Information**

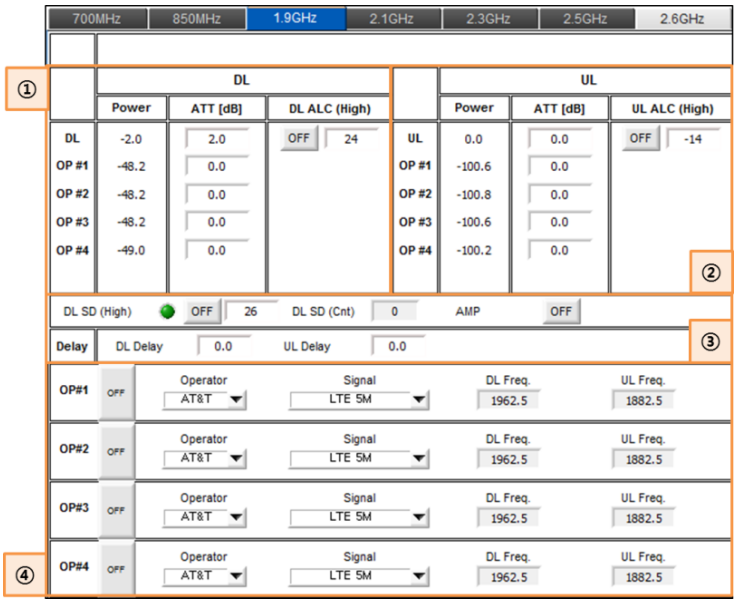

Figure 22. 1.9GHz ERU Band Information Screen.

① 1.9GHz TX Signal Monitoring and Control

The RF signal output level(Downlink) of 1.9GHz band received from the MHU, EHUB can be checked on this item, and the output level can be manually adjusted by controlling ATTen. according to the operator. Also, ALC function is configured for the user to automatically adjust output level by inputting the desired ALC level and turning the function ON.

② 1.9GHz RX Signal Monitoring and Control

The RF signal input level(Uplink) of 1.9GHz band received from the terminal can be checked on this item. Also, same as TX, input level can be manually adjusted by controlling ATTen., and automatic input level adjustment through ALC is implemented.

③ 1.9GHz TX Shutdown and Delay Control

PRIVATE AND CONFIDENTIAL © 2019 FRTEK CO., LTD.

Item implements shutdown function of automatically turning HPA off when 1.9GHz TX output signal gets high due to overpower. User can set shutdown signal level, function operates when switch is on.

Also, item is configured with delay control item to control 1.9GHz system delay. When user inputs specific value on this delay window, 1.9GHz system delay applies with the user input value added.

④ 1.9GHz Channel Status

Item cannot be controlled on the ERU screen, the operator label, channel filter type, downlink frequency, uplink frequency set from MHU per each operator can be checked.

- **2.1GHz Band Information**

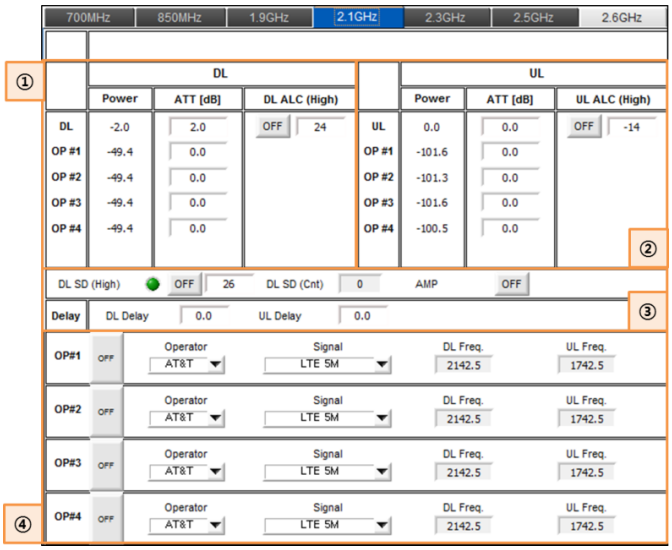

Figure 23. 2.1GHz ERU Band Information Screen.

① 2.1GHz TX Signal Monitoring and Control

The RF signal output level(Downlink) of 2.1GHz band received from the MHU, EHUB can be checked on this item, and the output level can be manually adjusted by controlling ATTen. according to the operator. Also, ALC function is configured for the user to automatically adjust output level by inputting the desired ALC level and turning the function ON.

② 2.1GHz RX Signal Monitoring and Control

The RF signal input level(Uplink) of 2.1GHz band received from the terminal can be checked on this item. Also, same as TX, input level can be manually adjusted by controlling ATTen., and automatic input level adjustment through ALC is implemented.

PRIVATE AND CONFIDENTIAL © 2019 FRTEK CO., LTD.

③ 2.1GHz TX Shutdown and Delay Control

Item implements shutdown function of automatically turning HPA off when 2.1GHz TX output signal gets high due to overpower. User can set shutdown signal level, function operates when switch is on.

Also, item is configured with delay control item to control 2.1GHz system delay. When user inputs specific value on this delay window, 2.1GHz system delay applies with the user input value added.

④ 2.1GHz Channel Status

Item cannot be controlled on the ERU screen, the operator label, channel filter type, downlink frequency, uplink frequency set from MHU per each operator can be checked.

- **2.3GHz Band Information**

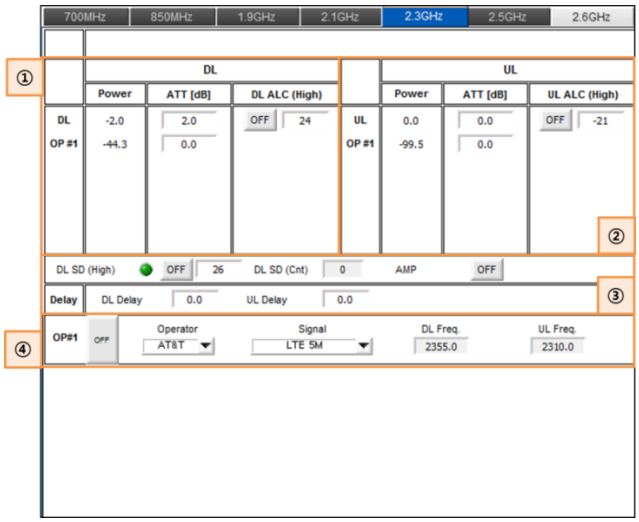

Figure 24. 2.3GHz ERU Band Information Screen.

① 2.3GHz TX Signal Monitoring and Control

The RF signal output level(Downlink) of 2.3GHz band received from the MHU, EHUB can be checked on this item, and the output level can be manually adjusted by controlling ATTen. according to the operator. Also, ALC function is configured for the user to automatically adjust output level by inputting the desired ALC level and turning the function ON.

② 2.3GHz RX Signal Monitoring and Control

The RF signal input level(Uplink) of 2.3GHz band received from the terminal can be checked on this item. Also, same as TX, input level can be manually adjusted by controlling ATTen., and automatic

PRIVATE AND CONFIDENTIAL © 2019 FRTEK CO., LTD.

input level adjustment through ALC is implemented.

③ 2.3GHz TX Shutdown and Delay Control

Item implements shutdown function of automatically turning HPA off when 2.3GHz TX output signal gets high due to overpower. User can set shutdown signal level, function operates when switch is on.

Also, item is configured with delay control item to control 2.3GHz system delay. When user inputs specific value on this delay window, 2.3GHz system delay applies with the user input value added.

④ 2.3GHz Channel Status

Item cannot be controlled on the ERU screen, the operator label, channel filter type, downlink frequency, uplink frequency set from MHU per each operator can be checked.

- **2.5GHz Band Information**

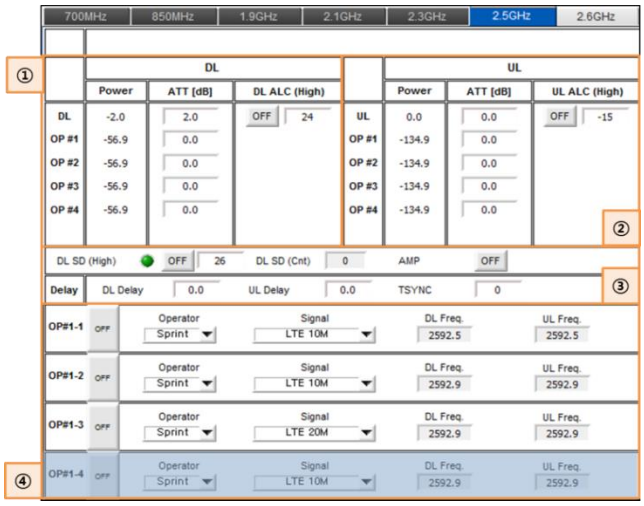

Figure 25. 2.5GHz ERU Band Information Screen.

① 2.5GHz TX Signal Monitoring and Control

The RF signal output level(Downlink) of 2.5GHz band received from the MHU, EHUB can be checked on this item, and the output level can be manually adjusted by controlling ATTen. according to the operator. Also, ALC function is configured for the user to automatically adjust output level by inputting the desired ALC level and turning the function ON.

② 2.5GHz RX Signal Monitoring and Control

The RF signal input level(Uplink) of 2.5GHz band received from the terminal can be checked on

PRIVATE AND CONFIDENTIAL © 2019 FRTEK CO., LTD.

this item. Also, same as TX, input level can be manually adjusted by controlling ATTen., and automatic input level adjustment through ALC is implemented.

③ 2.5GHz TX Shutdown and Delay Control

Item implements shutdown function of automatically turning HPA off when 2.5GHz TX output signal gets high due to overpower. User can set shutdown signal level, function operates when switch is on. Also, item is configured with delay control item to control 2.5GHz system delay. When user inputs specific value on this delay window, 2.5GHz system delay applies with the user input value added. TSNC item slightly delays total time of the 2.5GHz synchronization signal when user inputs specific value.

④ 2.5GHz Channel Status

Item cannot be controlled on the ERU screen, the operator label, channel filter type, downlink frequency, uplink frequency set from MHU per each operator can be checked.

- **2.6GHz Band Information**

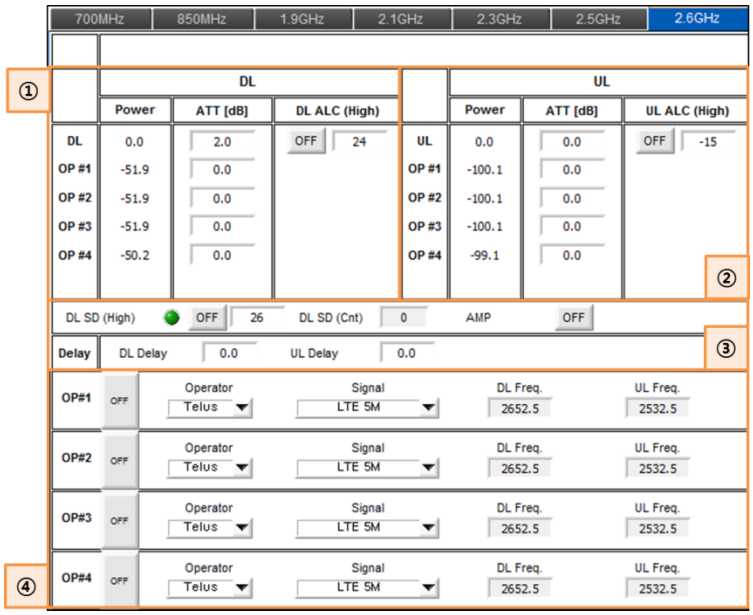

Figure 26. 2.6GHz ERU Band Information Screen.

① 2.6GHz TX Signal Monitoring and Control

The RF signal output level(Downlink) of 2.6GHz band received from the MHU, EHUB can be checked on this item, and the output level can be manually adjusted by controlling ATTen. according to the

PRIVATE AND CONFIDENTIAL © 2019 FRTEK CO., LTD.

operator. Also, ALC function is configured for the user to automatically adjust output level by inputting the desired ALC level and turning the function ON.

② 2.6GHz RX Signal Monitoring and Control

The RF signal input level(Uplink) of 2.6GHz band received from the terminal can be checked on this item. Also, same as TX, input level can be manually adjusted by controlling ATTen., and automatic input level adjustment through ALC is implemented.

③ 2.6GHz TX Shutdown and Delay Control

Item implements shutdown function of automatically turning HPA off when 2.6GHz TX output signal gets high due to overpower. User can set shutdown signal level, function operates when switch is on. Also, item is configured with delay control item to control 2.6GHz system delay. When user inputs specific value on this delay window, 2.6GHz system delay applies with the user input value added.

④ 2.6GHz Channel Status

Item cannot be controlled on the ERU screen, the operator label, channel filter type, downlink frequency, uplink frequency set from MHU per each operator can be checked.

PRIVATE AND CONFIDENTIAL © 2019 FRTEK CO., LTD.

Chapter 7

Alarm and Corrective Action

7.1 Alarm Phenomenon and Solution

PRIVATE AND CONFIDENTIAL © 2019 FRTEK CO., LTD.

Alarm and Corrective Action

7.1 Alarm Phenomenon and Solution

7.1.1 TX/RX PLL Alarm

Phenomenon	Cause
- Alarm window: green → red	- MHU : When TX PLL within MRFU is abnormal - ERU : When TX PLL within ERFU is abnormal

Solution and Action
- Solution : Replace MRFU for MHU, replace ERFU for ERU - Action : For MHU, replace MRFU of frequency band that alarm generated and check if it works normally, for ERU, same as MHU, replace ERFU of frequency band that alarm generated and check if it works normally

7.1.2 TX S/D(High) Alarm

Phenomenon	Cause
- Alarm window: green → red	- When TX output level is higher than shutdown alarm set value

Solution and Action
- Solution: Set to appropriate TX ATTen. - Action: Set TX ATTen. appropriately according to the environment, turn ALC on and prevent shutdown.

7.1.3 DTU Alarm

Phenomenon	Cause
- Alarm window : green → red	- When DTU board abnormality such as DTU board connection harness, DTU board clock, DTU board telecommunication abnormality occurs

PRIVATE AND CONFIDENTIAL © 2019 FRTEK CO., LTD.

Solution and Action
- Solution : Replace DTU board connection harness or if abnormality still occurs after 10MHz reference signal input replace DTU board. - Action : Check DTU board connection harness, input reference signal and replace DTU board and check if it works normally.

7.1.4 DTU Link Fail Alarm

Phenomenon	Cause
- Alarm window: green → red	- When telecommunication between DTU board and CPU abnormality occurs

Solution and Action
- Solution : Check DTU board and back board connection status and check reference clock - Action : Check DTU board connection status and replace DTU board

7.1.5 Over Temp

Phenomenon	Cause
- Alarm window: green → red	- When unit temperature is over 80℃

Solution and Action
- Solution : Turn ON internal or external FAN When AMP temperature is abnormal, change ERFU of relevant frequency band - Action: When AMP is abnormal, change ERFU integration module and check if it works normally.

PRIVATE AND CONFIDENTIAL © 2019 FRTEK CO., LTD.